Frames Catalogue	
C2 FRAME ASSEMBLY	1

Front Wheels Catalogue	
FRONT CASTER WHEELS	10
FORKS	11
CASTER LOCK PIN	13
V2 CASTER HOUSING	17
V2 ANTI-FLUTTER CASTER HOUSING	20
HARDWARE	24

Footrests Catalogue	
FOOTRESTS - SWING-IN, SWING-OUT	25
CALF STRAPS	42
BODYPOINT AEROMESH CALF SUPPORTS	46
ELEVATING LEGRESTS - SWING-IN, SWING-OUT	47
PIVOT EXTENSION KIT	50
FOOTPLATES	52
ROLLER BUMPER	65
ONE PIECE FOOTPLATES	67
FLIP-UP ONE PIECE FOOTPLATE STRUCTURE	68
FRONT MOUNT FOOTRESTS	71
FRONT MOUNT FOOTPLATES	79
HIGH MOUNT, EXTENSION WITH CLAMPS	87
RESIDUAL LIMB SUPPORT - SWING-IN, SWING-OUT	89

Backrests Catalogue	
CARBON BACK CANES	94
ALUMINUM BACK CANES	101
PUSH HANDLES & STRAIGHT EXTENSION	104
INTEGRATED PUSH HANDLE BACK CANES	108
BACK CANE HARDWARE (CARBON FRAME)	112
BACK CANE HARDWARE (L TYPE ARMREST)	118
BACK CANE HARDWARE (DEPTH ADJ. BACK CANE)	121
NEWTON FOLDING STABILIZER BAR	124
STROLLER HANDLES	126
HEAD RESTS	128
PUSH HANDLES FOR HEAD RESTS	131

Upholsteries & Seatings Catalogue	
BACK UPHOLSTERY - SLIP ON & TENSION BACK, ACTIVE-MESH	136
SLIDING SEAT SLINGS TYPE 2	139
CUSHIONS	142

Rear Wheels Catalogue	
REAR WHEELS & SPOKES	147
SPINERGY REAR WHEELS	148
SPINERGY CLX BLADE REAR WHEELS	149
TIRES	150
HANDRIMS	151
SURGE AND NATURAL FIT HANDRIMS	152

NEWTON AIR GRIP HANDRIMS	153
BBRAVER HANDRIMS	154
HANDRIM HARDWARE	155
FLAT FREE INSERTS	157
SPOKE GUARDS	158
REAR WHEELS + TIRES	160
QUICK RELEASE & PERMANENT AXLE	164
MULTI-POSITION MOUNTING PLATE V2B	167
AMPUTEE ADJUSTABLE AXLE PLATE FOR MULTI-POSITION MOUNTING PLATE V2B	170
ONE ARM DRIVE SUNRISE KIT ADAPTOR	176
E-MOTION, TWION & E-FIX ADAPTOR KIT	178

Wheel Locks Catalogue

WHEEL LOCK - PUSH & PULL	181
WHEEL LOCK - PUSH & PULL WITH EXTENDED RAIL	188
WHEEL LOCK - SCISSOR	193
WHEEL LOCK - GRADE AID	195
WHEEL LOCK - GRADE AID WITH EXTENDED RAIL	198
WHEEL LOCK - CLAMPS	201
UNILATERAL WHEEL LOCK ADAPTOR KIT	203
FOOTREST STOPPER	205
ATTENDENT WHEEL LOCK KIT	207

Armrests Catalogue

ARMRESTS	209
ARMREST - GEL ARMREST PAD	224
ARMRESTS - FLIP BACK RECEIVER	227
ARMRESTS - T TYPE RECEIVER	231
ARMRESTS - SWING AWAY RECEIVER	233

Sideguards Catalogue

SIDEGUARDS	235
FENDER SIDEGUARDS	242
REMOVABLE SIDEGUARD & MUDGUARD RECEIVERS	247
SIDEGUARD - CLOTH	249

Seatbelts Catalogue

POSITIONING SEATBELTS	250
POSITIONING SEATBELTS - BODYPOINT	253
HIP BELT - BODYPOINT EVOFLEX	255
WC-19 AUTO BUCKLE (CARBON FRAME)	257
POSITIONING SEATBELTS - ADDITIONAL HARDWARE (2 COMPOSITES CLAMPS)	259

Accessories Catalogue

ANTI-TIPPERS	261
PATCHES	266
CANE HOLDERS	267
CLOSING STRAPS	269
FOOTREST NEOPREN IMPACT GUARDS	270
OXYGEN TANK HOLDER	271
SEAT POUCH	273

TOOL KIT	274
MOTION COMPOSITES T-SHIRT	276
MOTION COMPOSITES POLO	277
NEWTON BACKPACK	278
BODYPOINT MOBILITY BAG	279

Color Options Catalogue

STICKERS - HELIO	280
COLOR SWATCH (ALL COLORS)	281
COLOR TOUCH-UP	282

Quick Orders Catalogue

FLIP BACK TYPE 2 COMPLETE ARMREST	283
COMPLETE ARMREST ASSEMBLY TYPE 2 (PAIR)	286
FORK ASSEMBLY	291
STEM BOLT ASSEMBLY	294
CASTER LOCK PIN ASSEMBLY	297
LINK + HARDWARE	299
REAR BUSHING ASSEMBLY V2B	301
REAR WHEEL ASSEMBLY	303
WHEEL LOCK PAIR ASSEMBLY	305

Frame Catalogue
C2 Frame Assembly

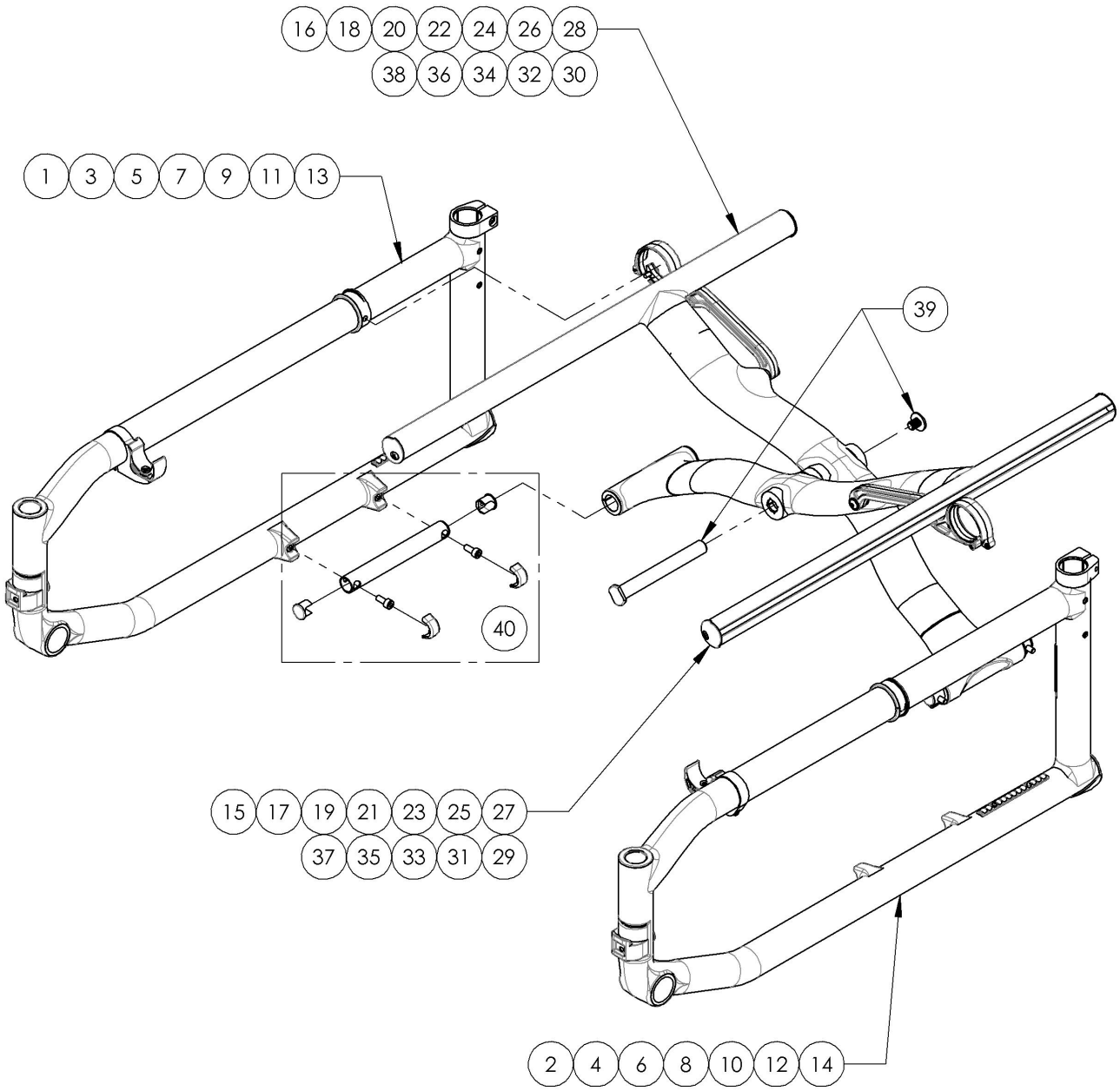

ITEM NO.	PARTNO	DESCRIPTION	QTY.
1	9001046	Frame - Carbon Fiber, Right, 14 in Seat Depth, Regular (Specify Color)	1
2	9001053	Frame - Carbon Fiber, Left, 14 in Seat Depth, Regular (Specify Color)	1
3	9001047	Frame - Carbon Fiber, Right, 15 in Seat Depth, Regular (Specify Color)	1
4	9001054	Frame - Carbon Fiber, Left, 15 in Seat Depth, Regular (Specify Color)	1
5	9001048	Frame - Carbon Fiber, Right, 16 in Seat Depth, Regular (Specify Color)	1
6	9001055	Frame - Carbon Fiber, Left, 16 in Seat Depth, Regular (Specify Color)	1
7	9001049	Frame - Carbon Fiber, Right, 17 in Seat Depth, Regular (Specify Color)	1
8	9001056	Frame - Carbon Fiber, Left, 17 in Seat Depth, Regular (Specify Color)	1
9	9001050	Frame - Carbon Fiber, Right, 18 in Seat Depth, Regular (Specify Color)	1
10	9001057	Frame - Carbon Fiber, Left, 18 in Seat Depth, Regular (Specify Color)	1
11	9001051	Frame - Carbon Fiber, Right, 19 in Seat Depth, Regular (Specify Color)	1
12	9001058	Frame - Carbon Fiber, Left, 19 in Seat Depth, Regular (Specify Color)	1
13	9001052	Frame - Carbon Fiber, Right, 20 in Seat Depth, Regular (Specify Color)	1
14	9001059	Frame - Carbon Fiber, Left, 20 in Seat Depth, Regular (Specify Color)	1
15	9001020	X-Brace - Carbon Fiber, Front, 14 in Width (Specify Seat Depth)	1
16	9001029	X-Brace - Carbon Fiber, Rear, 14 in Width (Specify Seat Depth)	1
17	9001021	X-Brace - Carbon Fiber, Front, 15 in Width (Specify Seat Depth)	1
18	9001030	X-Brace - Carbon Fiber, Rear, 15 in Width (Specify Seat Depth)	1
19	9001022	X-Brace - Carbon Fiber, Front, 16 in Width (Specify Seat Depth)	1
20	9001031	X-Brace - Carbon Fiber, Rear, 16 in Width (Specify Seat Depth)	1
21	9001023	X-Brace - Carbon Fiber, Front, 17 in Width (Specify Seat Depth)	1
22	9001032	X-Brace - Carbon Fiber, Rear, 17 in Width (Specify Seat Depth)	1
23	9001024	X-Brace - Carbon Fiber, Front, 18 in Width (Specify Seat Depth)	1
24	9001033	X-Brace - Carbon Fiber, Rear, 18 in Width (Specify Seat Depth)	1
25	9001025	X-Brace - Carbon Fiber, Front, 19 in Width (Specify Seat Depth)	1
26	9001034	X-Brace - Carbon Fiber, Rear, 19 in Width (Specify Seat Depth)	1
27	9001026	X-Brace - Carbon Fiber, Front, 20 in Width (Specify Seat Depth)	1
28	9001035	X-Brace - Carbon Fiber, Rear, 20 in Width (Specify Seat Depth)	1
29	9001036	X-Brace HD - Carbon Fiber, Front, 18 in Width (Specify Seat Depth)	1
30	9001041	X-Brace HD - Carbon Fiber, Rear, 18 in Width (Specify Seat Depth)	1
31	9001037	X-Brace HD - Carbon Fiber, Front, 19 in Width (Specify Seat Depth)	1
32	9001042	X-Brace HD - Carbon Fiber, Rear, 19 in Width (Specify Seat Depth)	1
33	9001038	X-Brace HD - Carbon Fiber, Front, 20 in Width (Specify Seat Depth)	1
34	9001043	X-Brace HD - Carbon Fiber, Rear, 20 in Width (Specify Seat Depth)	1
35	9001039	X-Brace HD - Carbon Fiber, Front, 21 in Width (Specify Seat Depth)	1
36	9001044	X-Brace HD - Carbon Fiber, Rear, 21 in Width (Specify Seat Depth)	1
37	9001040	X-Brace HD - Carbon Fiber, Front, 22 in Width (Specify Seat Depth)	1
38	9001045	X-Brace HD - Carbon Fiber, Rear, 22 in Width (Specify Seat Depth)	1
39	9001229	X-Brace - Center Shaft	1
40	9001230	X-Brace - Base Shaft	2

MAKE SURE TO HAVE YOUR SERIAL NUMBER NEARBY WHEN ORDERING PARTS FOR YOUR MOTION COMPOSITES WHEELCHAIR

9001046_9001052
Frame - Carbon Fiber, Right (Specify Color)

ITEM NO.	PARTNO	DESCRIPTION	QTY
1	31582	V2 FOOTREST SLEEVE ANCHOR - ASSEMBLY	1
2	11013	FOOTREST PIVOT SLEEVE	1
3	11504	CLAMP H-BLOCK SEAT SUPPORT - ASSEMBLY	1
4	12140	LINK GUIDE	1
5	99660	POP RIVET 3_32 D X .365 L X .126_.250	5
6	32530	BACKREST CLAMP RIGHT - ASSEMBLY	1
7	11015	MOUNTING RAIL	2
8	11020	ANTI-TIPPER BUMPER SLEEVE CARBON FRAME	1
9	99661	POP RIVET 1_8 DIA X .328 LGHT (.126_.187 GRIP)	1

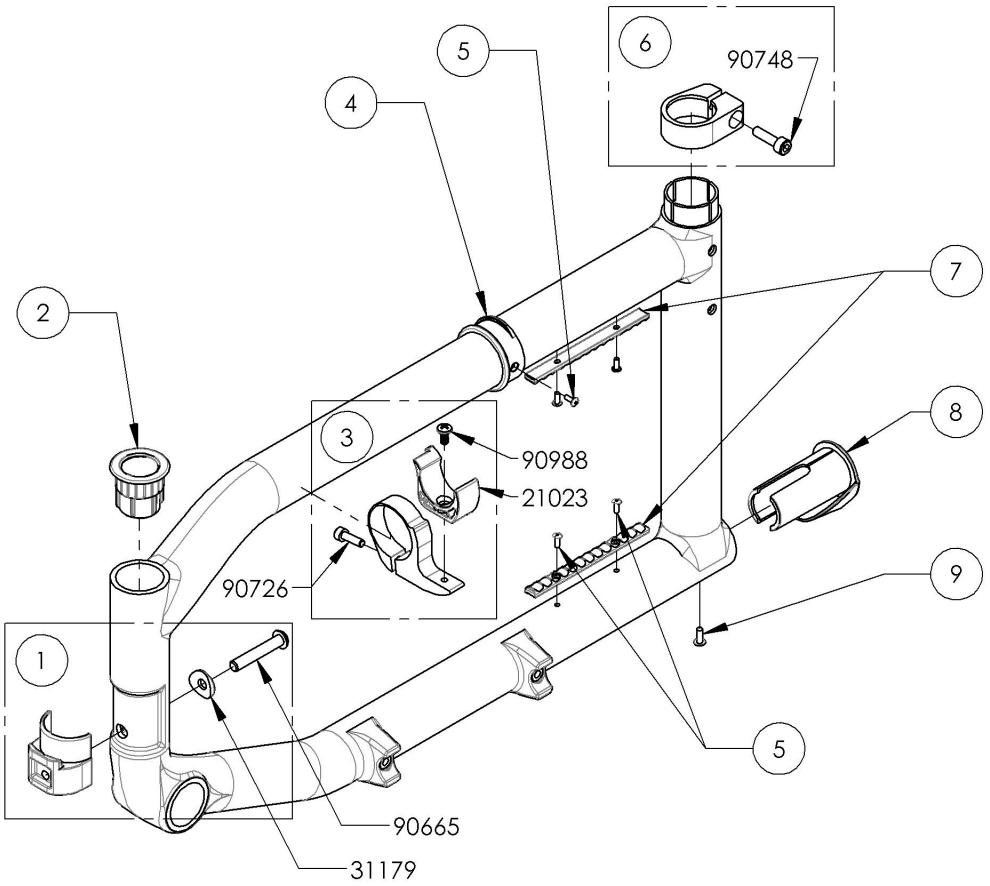

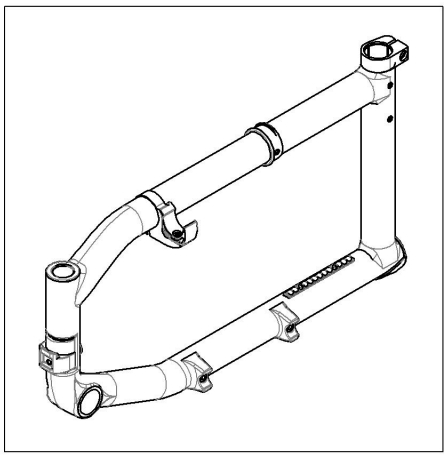

MAKE SURE TO HAVE YOUR SERIAL NUMBER NEARBY WHEN ORDERING PARTS FOR YOUR MOTION COMPOSITES WHEELCHAIR

9001053_9001059
Frame - Carbon Fiber, Left (Specify Color)

ITEM NO.	PARTNO	DESCRIPTION	QTY
1	31582	V2 FOOTREST SLEEVE ANCHOR - ASSEMBLY	1
2	11013	FOOTREST PIVOT SLEEVE	1
3	11504	CLAMP H-BLOCK SEAT SUPPORT - ASSEMBLY	1
4	12140	LINK GUIDE	1
5	99660	POP RIVET 3_32 D X .365 L X .126_.250	5
6	32531	BACKREST CLAMP LEFT - ASSEMBLY	1
7	11015	MOUNTING RAIL	2
8	11020	ANTI-TIPPER BUMPER SLEEVE CARBON FRAME	1
9	99661	POP RIVET 1_8 DIA X .328 LGHT (.126_.187 GRIP)	1

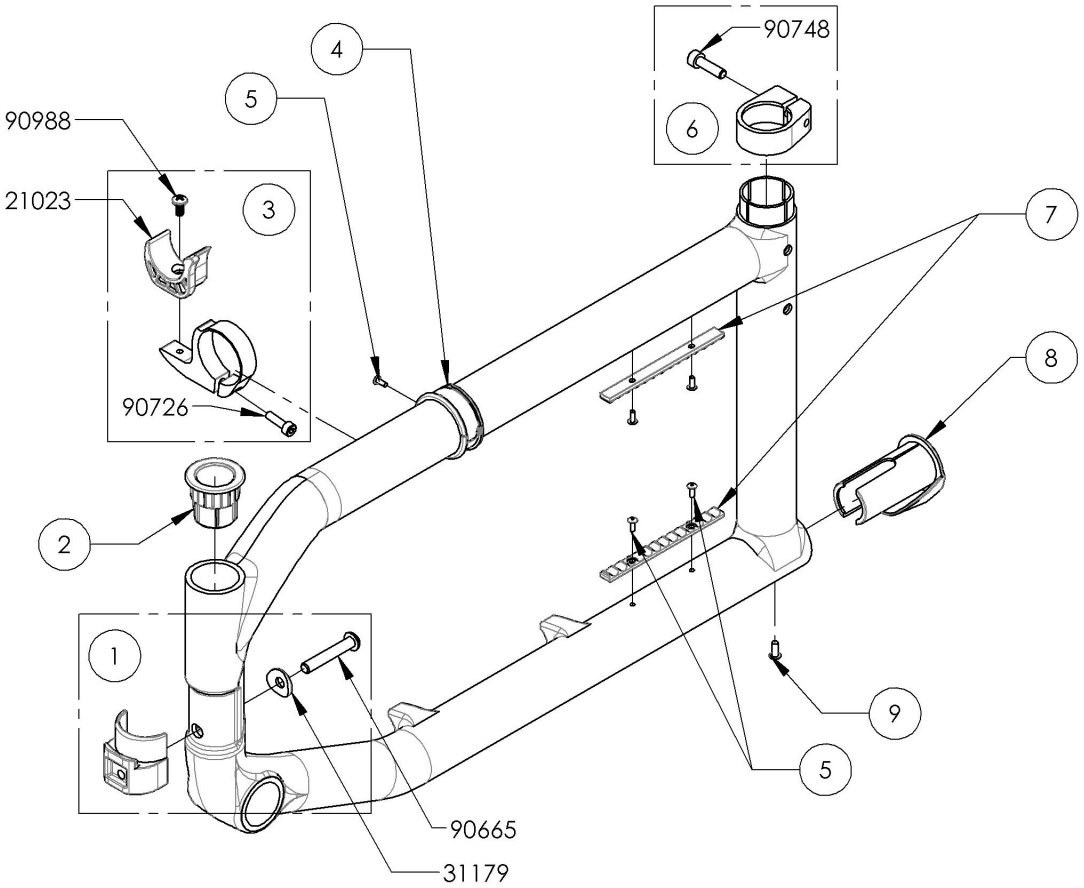

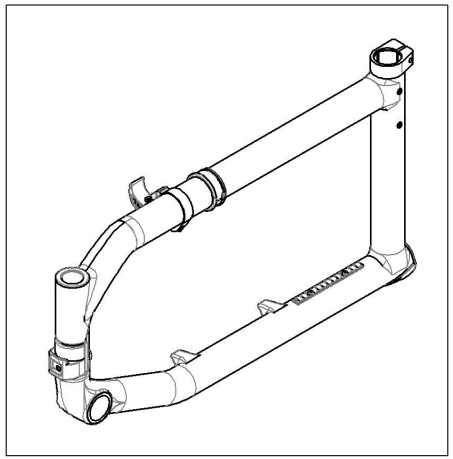

MAKE SURE TO HAVE YOUR SERIAL NUMBER NEARBY WHEN ORDERING PARTS FOR YOUR MOTION COMPOSITES WHEELCHAIR

9001018_9001026
X-Brace - Carbon Fiber, Front (Specify Seat Depth)

ITEM NO.	PARTNO	DESCRIPTION	9001018 /QTY.	9001019 /QTY.	9001020 /QTY.	9001021 /QTY.	9001022 /QTY.	9001023 /QTY.	9001024 /QTY.	9001025 /QTY.	9001026 /QTY.	REPLACEMENT PARTS/QTY.
1	12152	12in A7_C2 LINK	1	-	-	-	-	-	-	-	-	-
2	12153	13in A7_C2 LINK	-	1	-	-	-	-	-	-	-	-
3	12154	14in A7_C2 LINK	-	-	1	-	-	-	-	-	-	-
4	12155	15in A7_C2 LINK	-	-	-	1	-	-	-	-	-	-
5	12156	16in A7_C2 LINK	-	-	-	-	1	-	-	-	-	-
6	12157	17in A7_C2 LINK	-	-	-	-	-	1	-	-	-	-
7	12158	18in A7_C2 LINK	-	-	-	-	-	-	1	-	-	-
8	12159	19in A7_C2 LINK	-	-	-	-	-	-	-	1	-	-
9	12160	20in A7_C2 LINK	-	-	-	-	-	-	-	-	1	-
10	12006	C2 XBRACE BASE PIVOT SLEEVE	2	2	2	2	2	2	2	2	2	-
11	99000	SCREW PHILLIPS PAN HD #6-32 X 1/2	1	1	1	1	1	1	1	1	1	-
12	12145	C2 XBRACE CENTER PIVOT SLEEVE	2	2	2	2	2	2	2	2	2	-
13	91009	FLANGE BUTTON HEAD CAP SCREW, M5X.8 X 8mm	1	1	1	1	1	1	1	1	1	-
14	12013	CARBON SLOTTED SEAT TUBE PLUG - ASSEMBLY	2	2	2	2	2	2	2	2	2	-
15	12012	LINK STUD 12-16" CARBON C2 XBRACE	-	-	-	-	-	-	-	-	-	1
16	12011	LINK STUD 17-22" CARBON C2 XBRACE	-	-	-	-	-	-	-	-	-	1

LINK STUD INCLUDED WITH
THE 12" TO 16" ASSEMBLIES

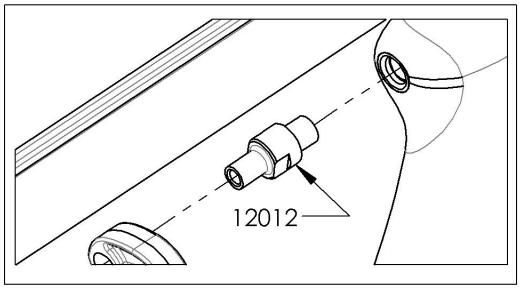

LINK STUD INCLUDED WITH
THE 17" TO 20" ASSEMBLIES

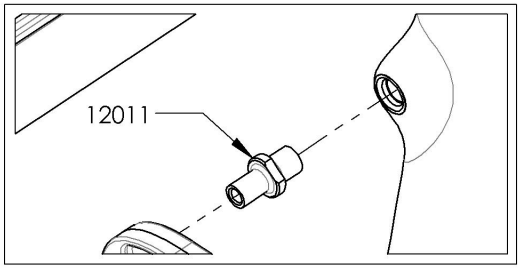

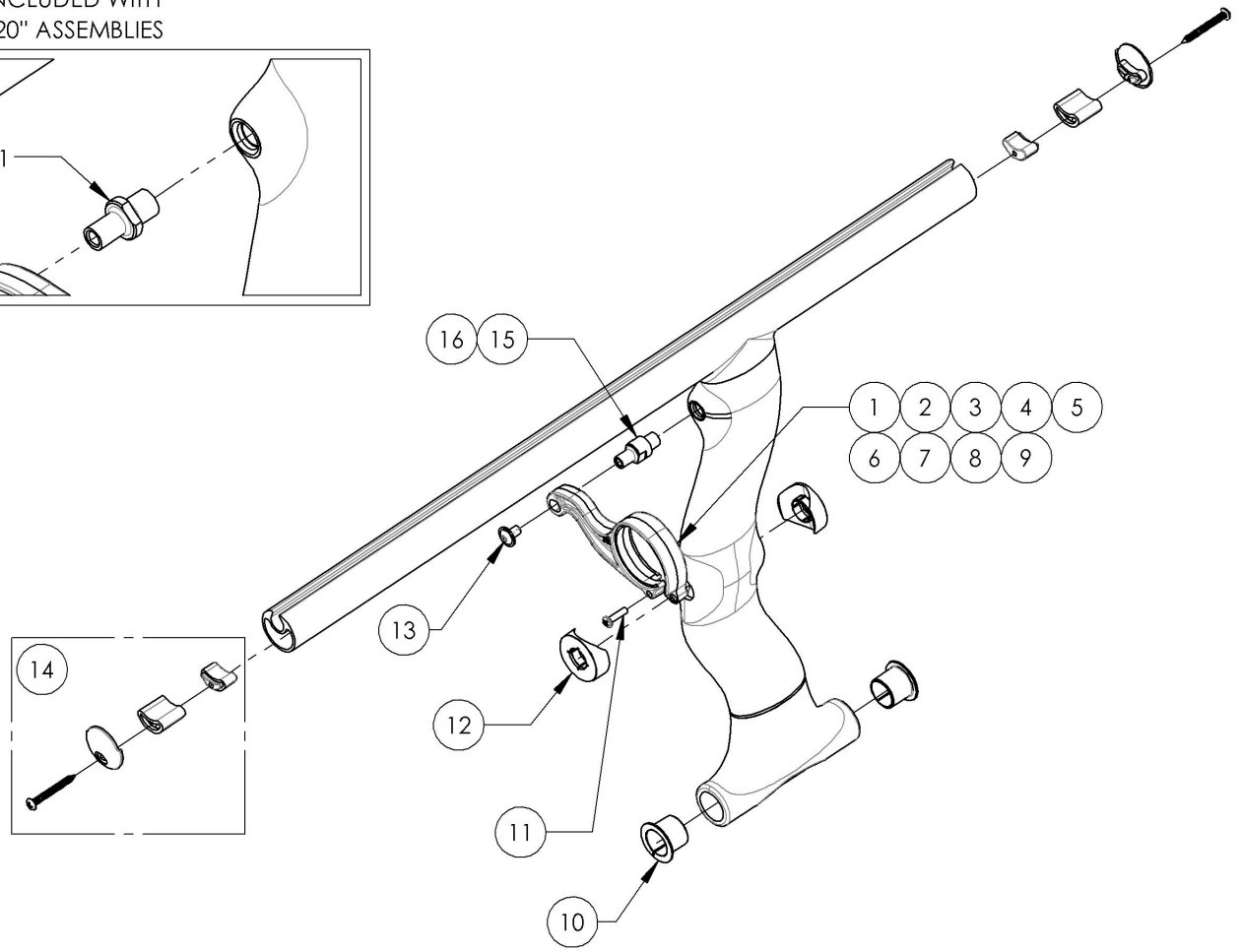

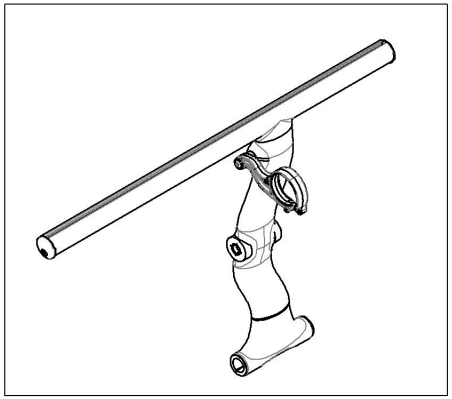

MAKE SURE TO HAVE YOUR SERIAL NUMBER NEARBY WHEN ORDERING PARTS FOR YOUR MOTION COMPOSITES WHEELCHAIR

9001027_9001035
X-Brace - Carbon Fiber, Rear (Specify Seat Depth)

ITEM NO.	PARTNO	DESCRIPTION	9001027 /QTY.	9001028 /QTY.	9001029 /QTY.	9001030 /QTY.	9001031 /QTY.	9001032 /QTY.	9001033 /QTY.	9001034 /QTY.	9001035 /QTY.	REPLACEMENT PARTS/QTY.
1	12152	12in A7_C2 LINK	1	-	-	-	-	-	-	-	-	-
2	12153	13in A7_C2 LINK	-	1	-	-	-	-	-	-	-	-
3	12154	14in A7_C2 LINK	-	-	1	-	-	-	-	-	-	-
4	12155	15in A7_C2 LINK	-	-	-	1	-	-	-	-	-	-
5	12156	16in A7_C2 LINK	-	-	-	-	1	-	-	-	-	-
6	12157	17in A7_C2 LINK	-	-	-	-	-	1	-	-	-	-
7	12158	18in A7_C2 LINK	-	-	-	-	-	-	1	-	-	-
8	12159	19in A7_C2 LINK	-	-	-	-	-	-	-	1	-	-
9	12160	20in A7_C2 LINK	-	-	-	-	-	-	-	-	1	-
10	12006	C2 XBRACE BASE PIVOT SLEEVE	2	2	2	2	2	2	2	2	2	-
11	99000	SCREW PHILLIPS PAN HD #6-32 X 1/2	1	1	1	1	1	1	1	1	1	-
12	12145	C2 XBRACE CENTER PIVOT SLEEVE	2	2	2	2	2	2	2	2	2	-
13	91009	FLANGE BUTTON HEAD CAP SCREW, M5X.8 X 8mm	1	1	1	1	1	1	1	1	1	-
14	12013	CARBON SLOTTED SEAT TUBE PLUG - ASSEMBLY	2	2	2	2	2	2	2	2	2	-
15	12012	LINK STUD 12-16" CARBON C2 XBRACE	-	-	-	-	-	-	-	-	-	1
16	12011	LINK STUD 17-22" CARBON C2 XBRACE	-	-	-	-	-	-	-	-	-	1

LINK STUD INCLUDED WITH
THE 12" TO 16" ASSEMBLIES

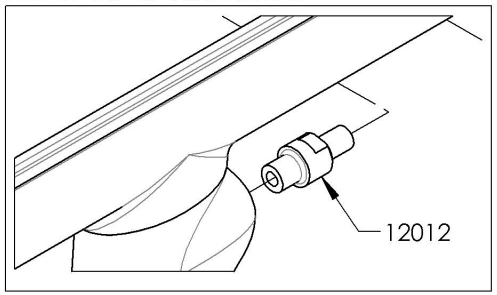

LINK STUD INCLUDED WITH
THE 17" TO 20" ASSEMBLIES

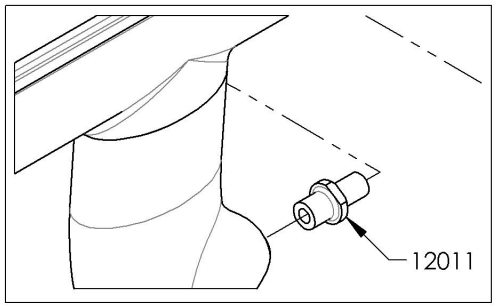

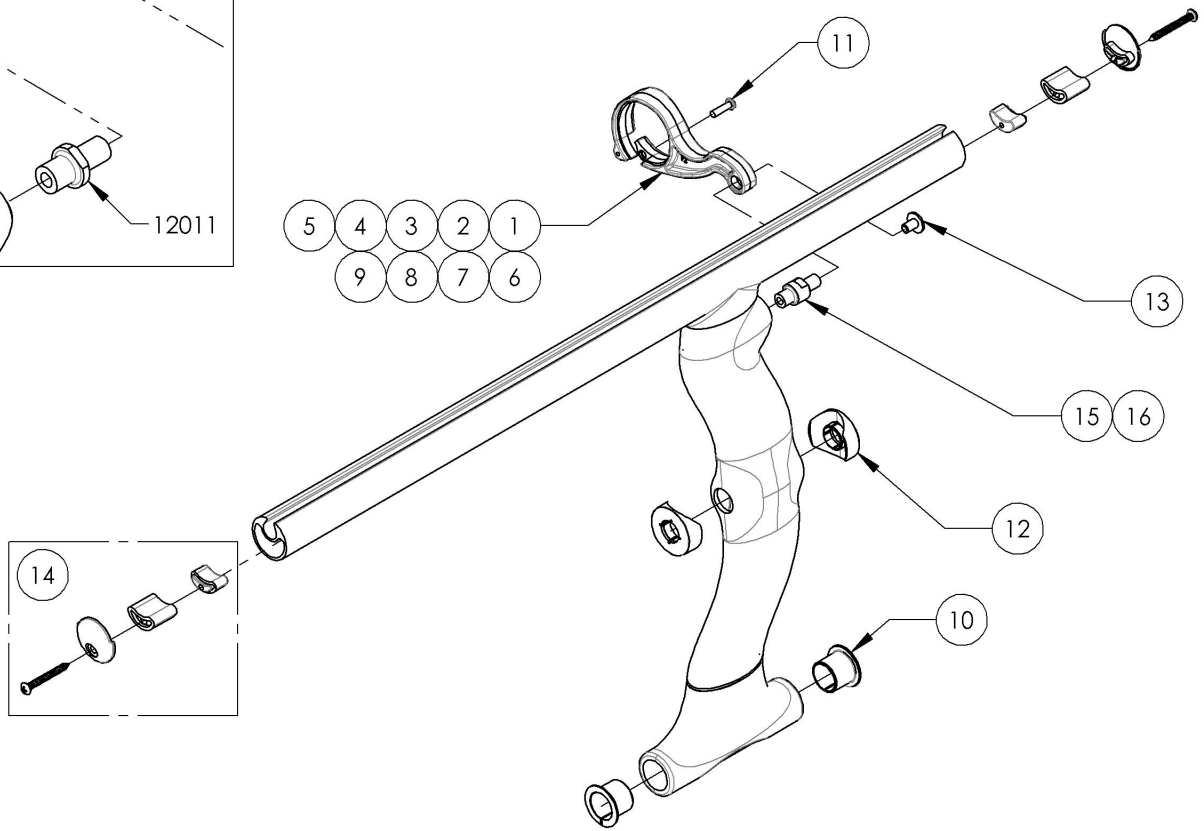

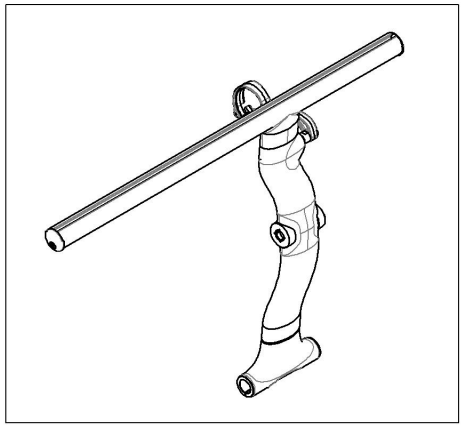

MAKE SURE TO HAVE YOUR SERIAL NUMBER NEARBY WHEN ORDERING PARTS FOR YOUR MOTION COMPOSITES WHEELCHAIR

9001036_9001040
X-Brace HD - Carbon Fiber, Front (Specify Seat Depth)

ITEM NO.	PARTNO	DESCRIPTION	9001036 /QTY.	9001037 /QTY.	9001038 /QTY.	9001039 /QTY.	9001040 /QTY.	REPLACEMENT PARTS/QTY.
1	12158	18in A7_C2 LINK	1	-	-	-	-	-
2	12159	19in A7_C2 LINK	-	1	-	-	-	-
3	12160	20in A7_C2 LINK	-	-	1	-	-	-
4	12161	21in A7_C2 LINK	-	-	-	1	-	-
5	12162	22in A7_C2 LINK	-	-	-	-	1	-
6	12006	C2 XBRACE BASE PIVOT SLEEVE	2	2	2	2	2	-
7	99000	SCREW PHILLIPS PAN HD #6-32 X 1/2	1	1	1	1	1	-
8	12145	C2 XBRACE CENTER PIVOT SLEEVE	2	2	2	2	2	-
9	91009	FLANGE BUTTON HEAD CAP SCREW, M5X.8 X 8mm	1	1	1	1	1	-
10	12013	CARBON SLOTTED SEAT TUBE PLUG - ASSEMBLY	2	2	2	2	2	-
11	12011	LINK STUD 17-22" CARBON C2 XBRACE	-	-	-	-	-	1

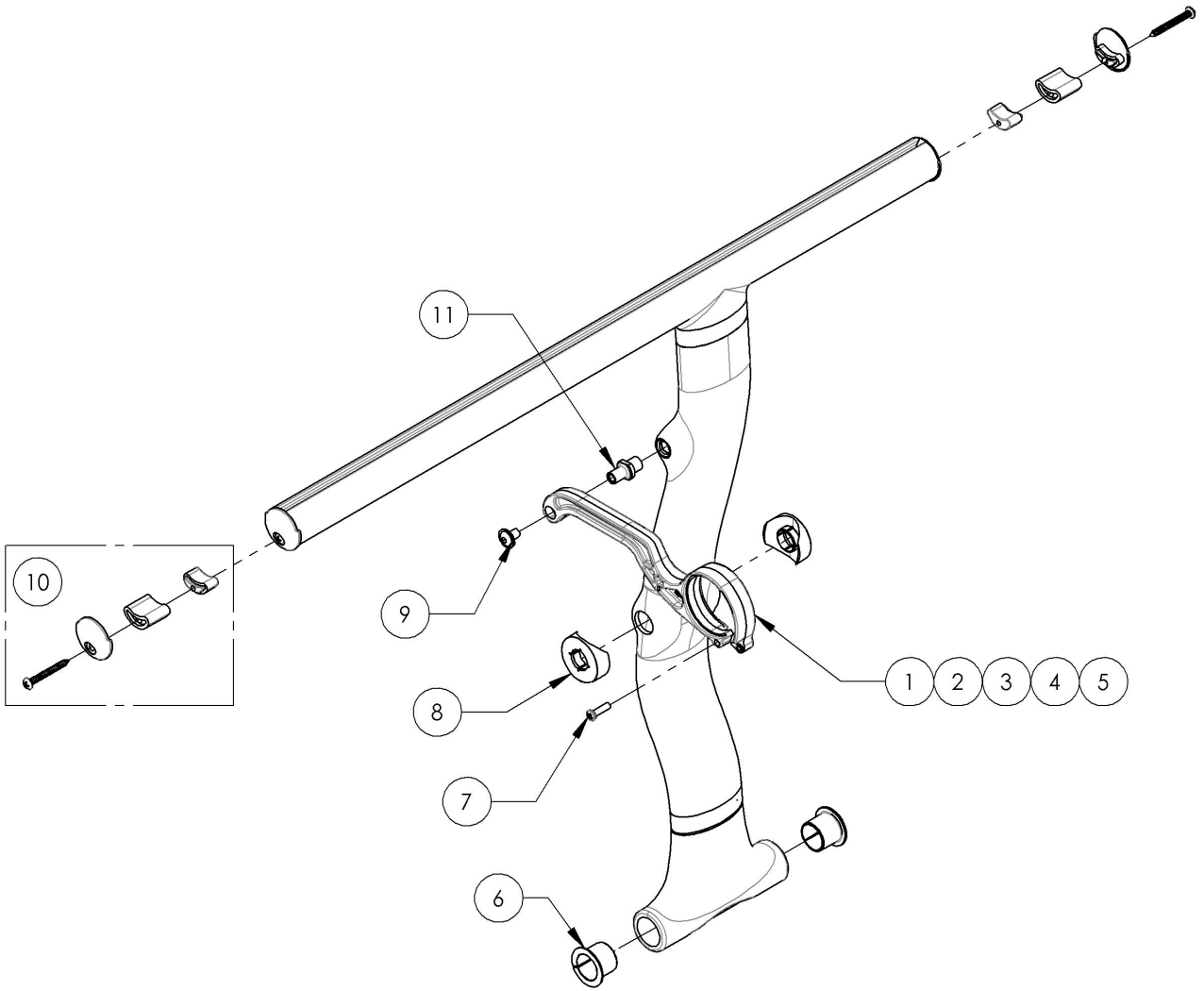

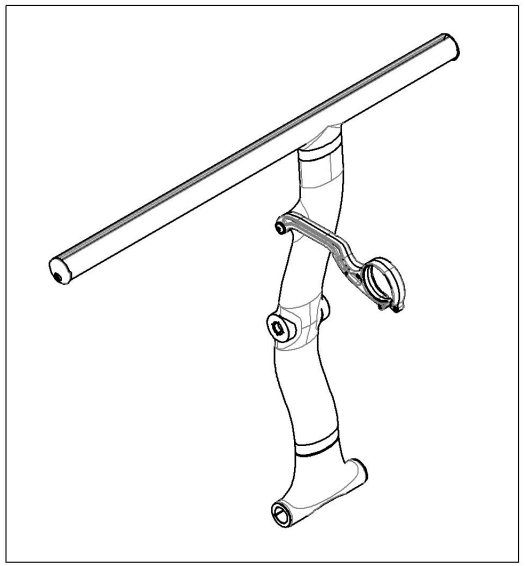

MAKE SURE TO HAVE YOUR SERIAL NUMBER NEARBY WHEN ORDERING PARTS FOR YOUR MOTION COMPOSITES WHEELCHAIR

9001041_9001045
X-Brace HD - Carbon Fiber, Rear (Specify Seat Depth)

ITEM NO.	PARTNO	DESCRIPTION	9001041 /QTY.	9001042 /QTY.	9001043 /QTY.	9001044 /QTY.	9001045 /QTY.	REPLACEMENT PARTS/QTY.
1	12158	18in A7_C2 LINK	1	-	-	-	-	-
2	12159	19in A7_C2 LINK	-	1	-	-	-	-
3	12160	20in A7_C2 LINK	-	-	1	-	-	-
4	12161	21in A7_C2 LINK	-	-	-	1	-	-
5	12162	22in A7_C2 LINK	-	-	-	-	1	-
6	12006	C2 XBRACE BASE PIVOT SLEEVE	2	2	2	2	2	-
7	99000	SCREW PHILLIPS PAN HD #6-32 X 1/2	1	1	1	1	1	-
8	12145	C2 XBRACE CENTER PIVOT SLEEVE	2	2	2	2	2	-
9	91009	FLANGE BUTTON HEAD CAP SCREW, M5X.8 X 8mm	1	1	1	1	1	-
10	12013	CARBON SLOTTED SEAT TUBE PLUG - ASSEMBLY	2	2	2	2	2	-
11	12011	LINK STUD 17-22" CARBON C2 XBRACE	-	-	-	-	-	1

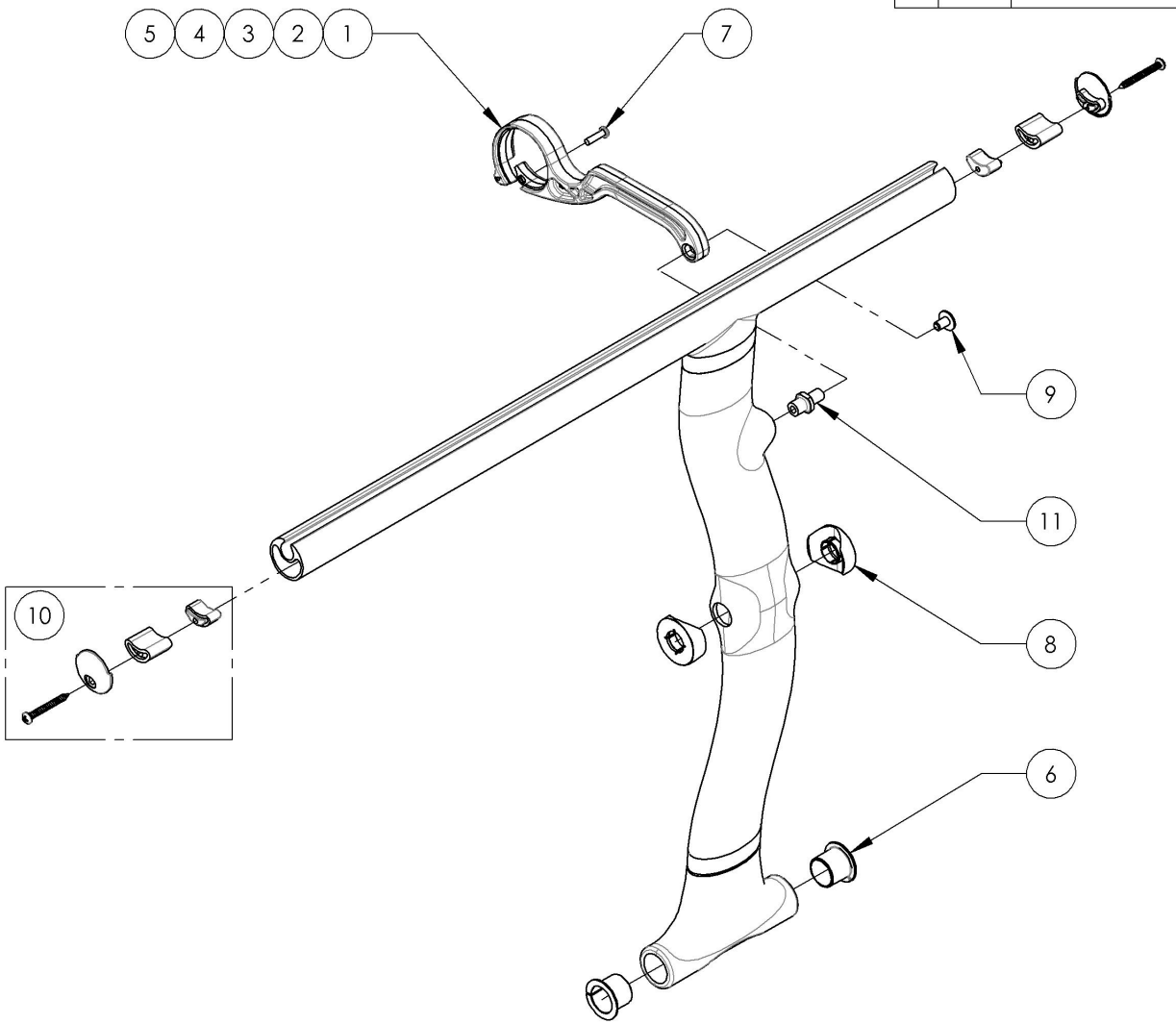

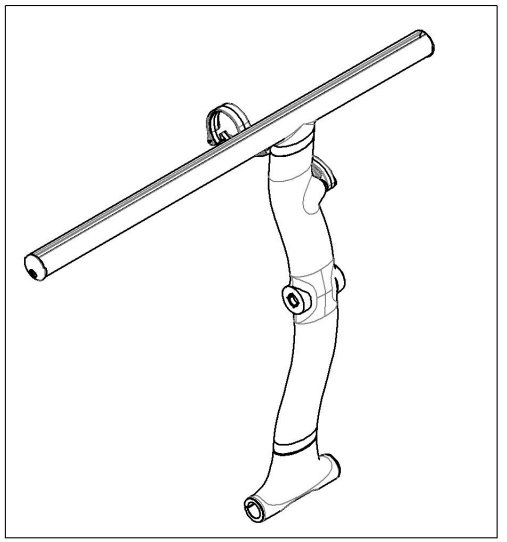

MAKE SURE TO HAVE YOUR SERIAL NUMBER NEARBY WHEN ORDERING PARTS FOR YOUR MOTION COMPOSITES WHEELCHAIR

9001229
X-Brace - Center Shaft

ITEM NO.	PARTNO	DESCRIPTION	9001229 /QTY.
1	12142	C2 XBRACE CENTER SHAFT	1
2	90994	FLANGE BUTTON HEAD CAP SCREW, M8X.8 X 10mm + BLUE THREADLOCKER	1

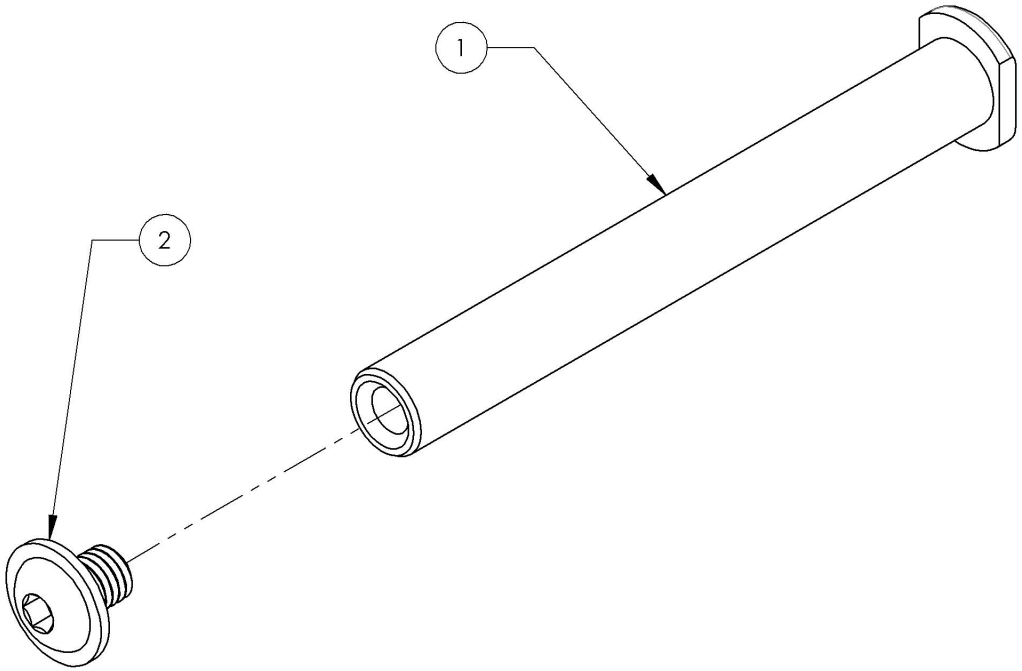

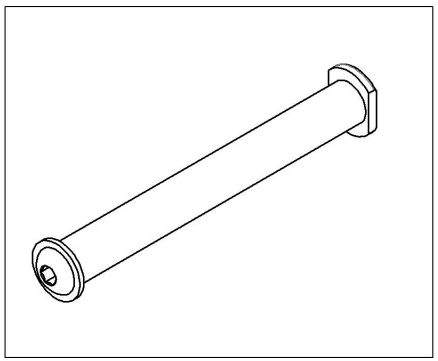

MAKE SURE TO HAVE YOUR SERIAL NUMBER NEARBY WHEN ORDERING PARTS FOR YOUR MOTION COMPOSITES WHEELCHAIR

9001230
X-Brace - Base Shaft

ITEM NO.	PARTNO	DESCRIPTION	9001230 /QTY.
1	12143	C2 XBRACE BASE SHAFT	1
2	12149	C2 XBRACE BASE PIVOT SHAFT PLASTIC CAP	2
3	90744	SOCKET CAP SCREW M5X0.8 X 12mm LONG, FULLY THREADED + BLUE TREADLOCKER - BLACK ZINC	2
4	12150	C2 XBRACE BASE PIVOT SHAFT ALU PLUG	2

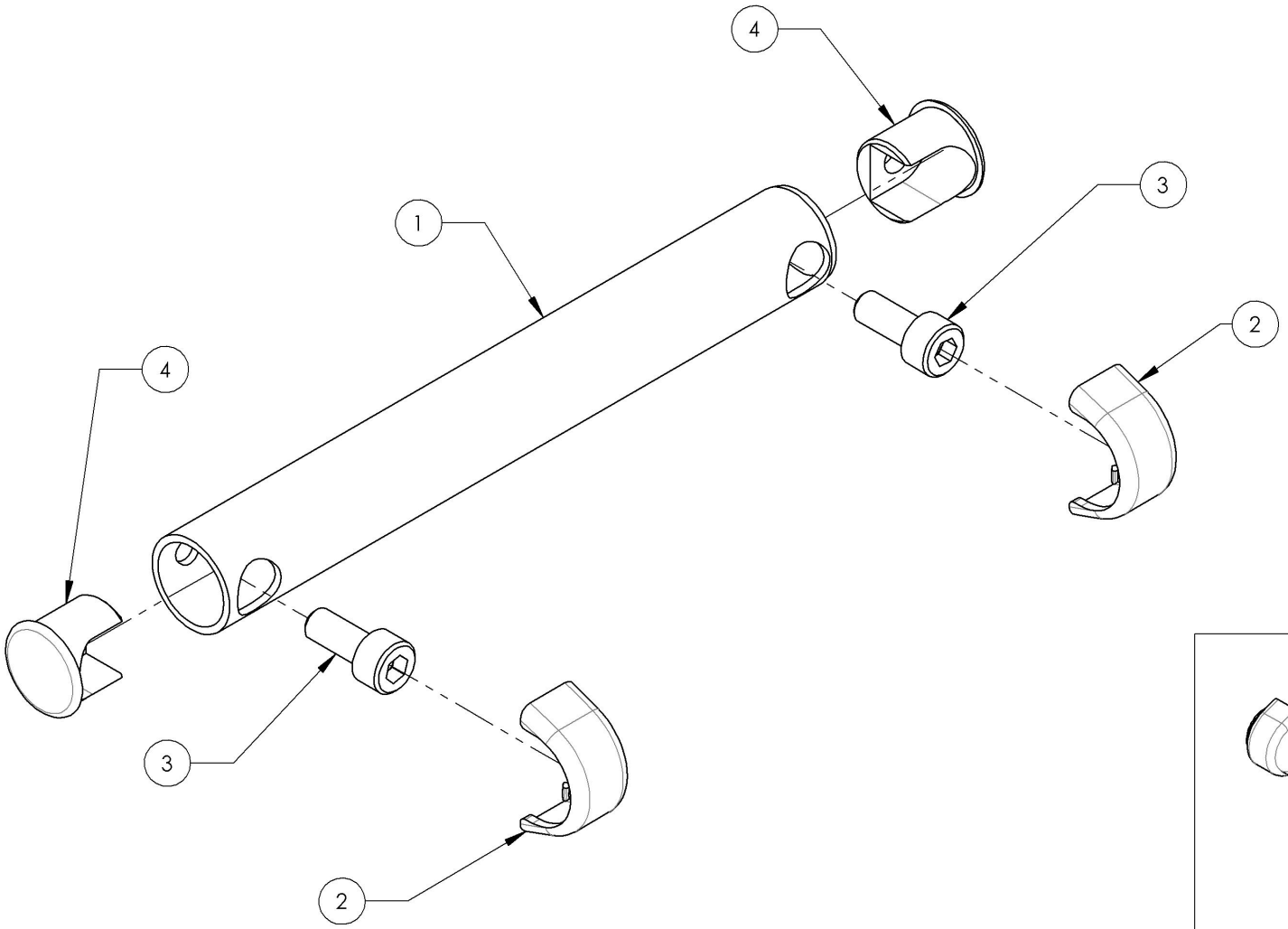

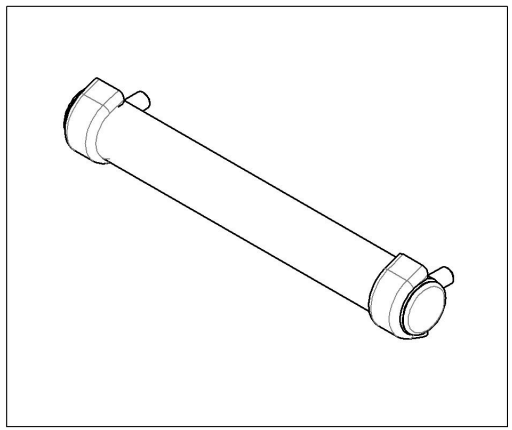

MAKE SURE TO HAVE YOUR SERIAL NUMBER NEARBY WHEN ORDERING PARTS FOR YOUR MOTION COMPOSITES WHEELCHAIR

Front Wheels Catalogue
Front Caster Wheels

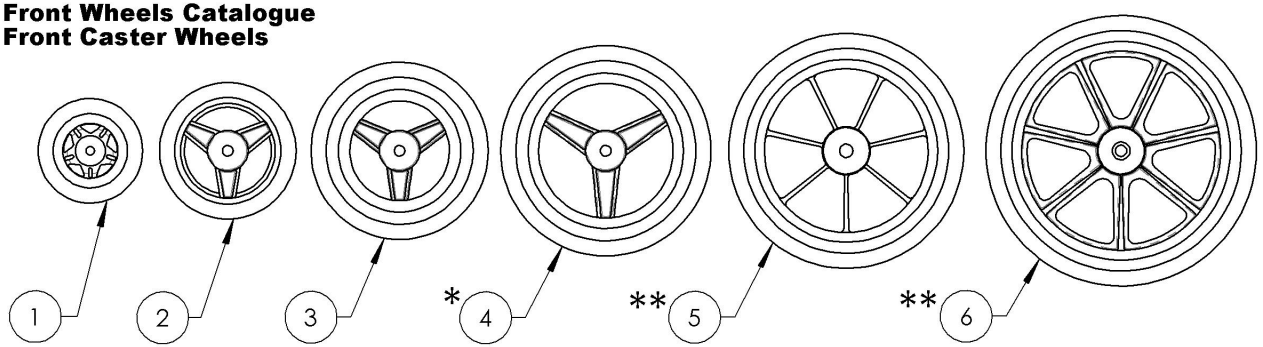

REPLACED BY #9002843, #9002844 & #9002845

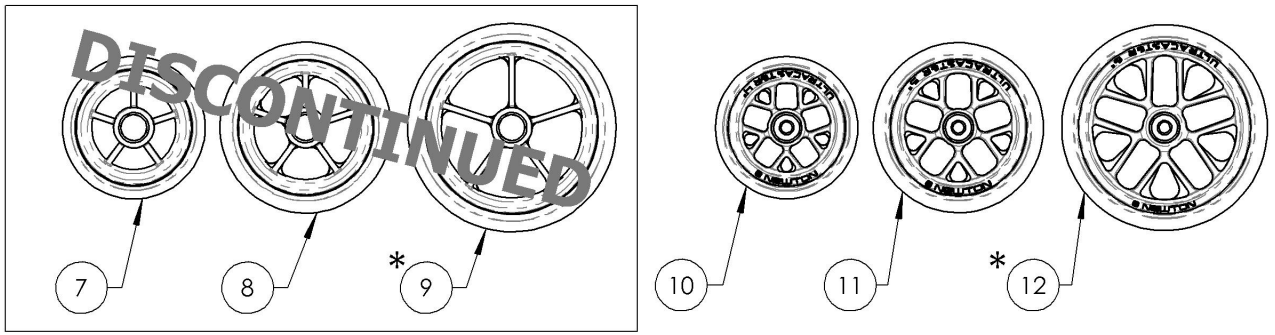

REPLACED BY #9002846, #9002847 & #9002848

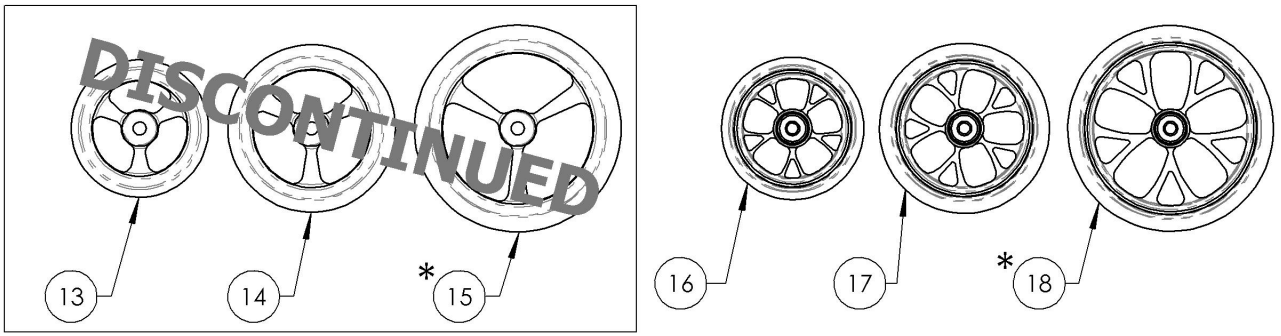

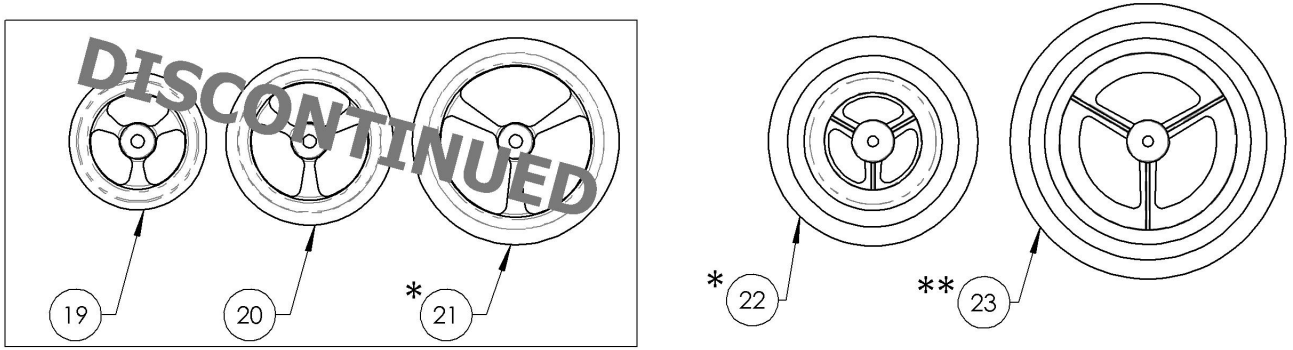

ITEM NO.	PARTNO	DESCRIPTION	QTY.
1	9001457	Caster - Composites, 3x1 in	1
2	9001458	Caster - Composites, 4x1 in	1
3	9001459	Caster - Composites, 5x1 in	1
4 *	9001460	Caster - Composites, 6x1 in	1
5 **	9001461	Caster - Composites, 7x1 in	1
6 **	9001462	Caster - Composites, 8x1 in	1
7	9001463	Caster - Composites Soft-Roll, 4x1½ in	1
8	9001464	Caster - Composites Soft-Roll, 5x1½ in	1
9 *	9001465	Caster - Composites Soft-Roll, 6x1½ in	1
10	9002843	Newton UltraCaster - Composites, 4 x 1½ in	1
11	9002844	Newton UltraCaster - Composites, 5 x 1½ in	1
12 *	9002845	Newton UltraCaster - Composites, 6 x 1½ in	1
13	9002213	Caster - Aluminum Soft-Roll, 4x1½ in	1
14	9002214	Caster - Aluminum Soft-Roll, 5x1½ in	1
15 *	9002215	Caster - Aluminum Soft-Roll, 6x1½ in	1
16	9002846	Newton UltraCaster - Aluminium, 4 x 1½ in	1
17	9002847	Newton UltraCaster - Aluminium, 5 x 1½ in	1
18 *	9002848	Newton UltraCaster - Aluminium, 6 x 1½ in	1
19	9001466	Caster - Court Wheel Aluminum, 4x1 in	1
20	9001467	Caster - Court Wheel Aluminum, 5x1 in	1
21 *	9001468	Caster - Court Wheel Aluminum, 6x1 in	1
22 *	9001469	Caster - Pneumatic, 6x1¼ in	1
23 **	9001470	Caster - Pneumatic, 8x1¼ in	1

DISCONTINUED

DISCONTINUED

DISCONTINUED

* :NOT AVAILABLE WITH VELOCE MONOARM FORK
** :NOT AVAILABLE WITH VELOCE & APEX FORK

BEARING REPLACEMENT

NEWTON ULTRACASTER WHEELS
9002843, 9002844, 9002845,
9002846, 9002847, 9002848,

SOFT-ROLL & COURT WHEELS
9001463, 9001464, 9001465,
9002213, 9002214, 9002215,
9001466, 9001467 & 9001468
Part#: **22037**

COMPOSITES & PNEUMATIC CASTER WHEELS
9001457, 9001458, 9001459, 9001460,
9001461, 9001462, 9001469 & 9001470
Part#: **22038**

MAKE SURE TO HAVE YOUR SERIAL NUMBER NEARBY WHEN ORDERING PARTS FOR YOUR MOTION COMPOSITES WHEELCHAIR

Front Wheels Catalogue
Forks

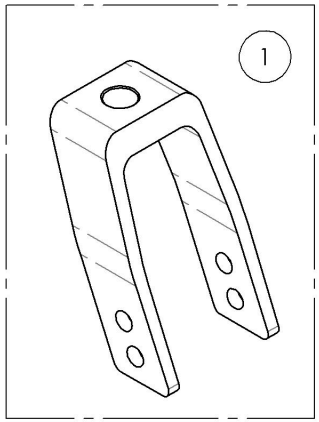

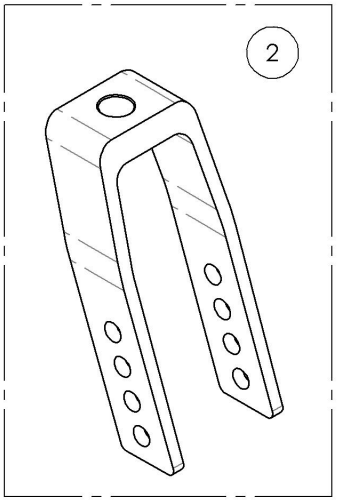

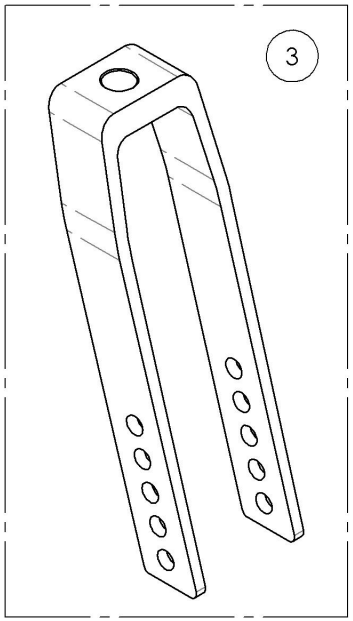

ITEM NO.	PARTNO	DESCRIPTION	QTY.
1	9001450	Fork - 4 in	1
2	9001451	Fork - 5 in	1
3	9001452	Fork - 7 in	1
4	9001449	Suspension Fork - Frog Leg	1
5	9002413	Suspension Fork - Frog Leg, Anti-Flutter Caster Housing, STD Stem Bolt	1
6	9002414	Suspension Fork - Frog Leg, Anti-Flutter Caster Housing, +1 in Stem Bolt	1
7	9002415	Suspension Fork - Frog Leg, Anti-Flutter Caster Housing, +2 in Stem Bolt	1

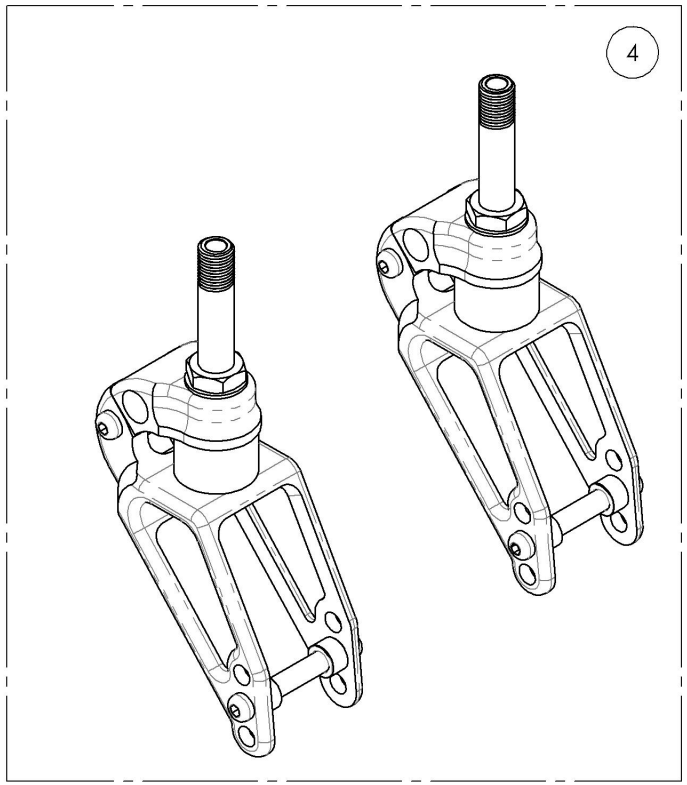

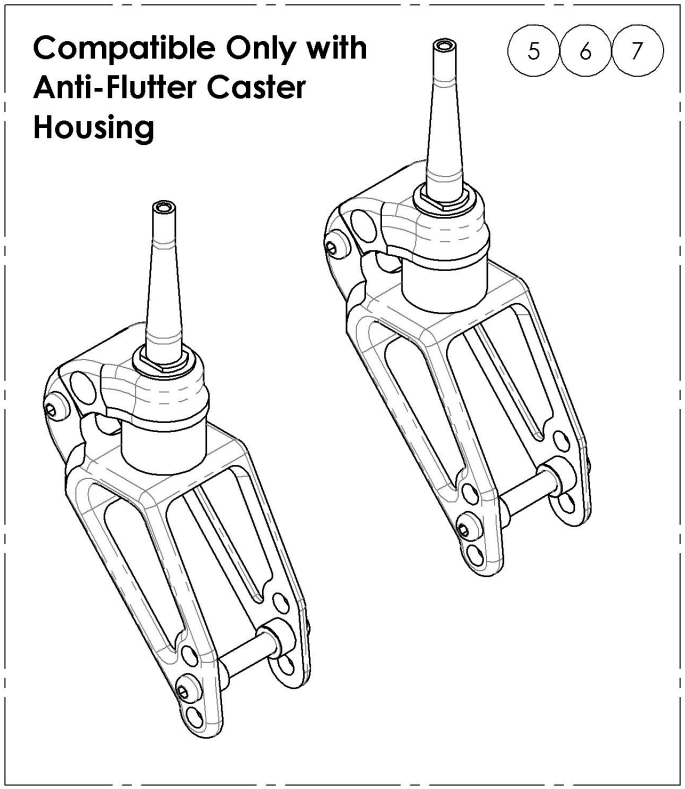

MAKE SURE TO HAVE YOUR SERIAL NUMBER NEARBY WHEN ORDERING PARTS FOR YOUR MOTION COMPOSITES WHEELCHAIR

9002413_9002415
Suspension Fork - Frog Leg, Anti-Flutter Caster Housing

ITEM NO.	PARTNO	DESCRIPTION	9002413 /QTY.	9002414 /QTY.	9002415 /QTY.
1	22120	FROG LEGS SHOCK ABSORBERS FORK (PAIR)	1	1	1
2	22153	FROG LEGS SHOCK ABSORBER FORK ANTI-FLUTTER STD STEM BOLT	2	-	-
3	22154	FROG LEGS SHOCK ABSORBER FORK ANTI-FLUTTER +1 STEM BOLT	-	2	-
4	22155	FROG LEGS SHOCK ABSORBER FORK ANTI-FLUTTER +2 STEM BOLT	-	-	2

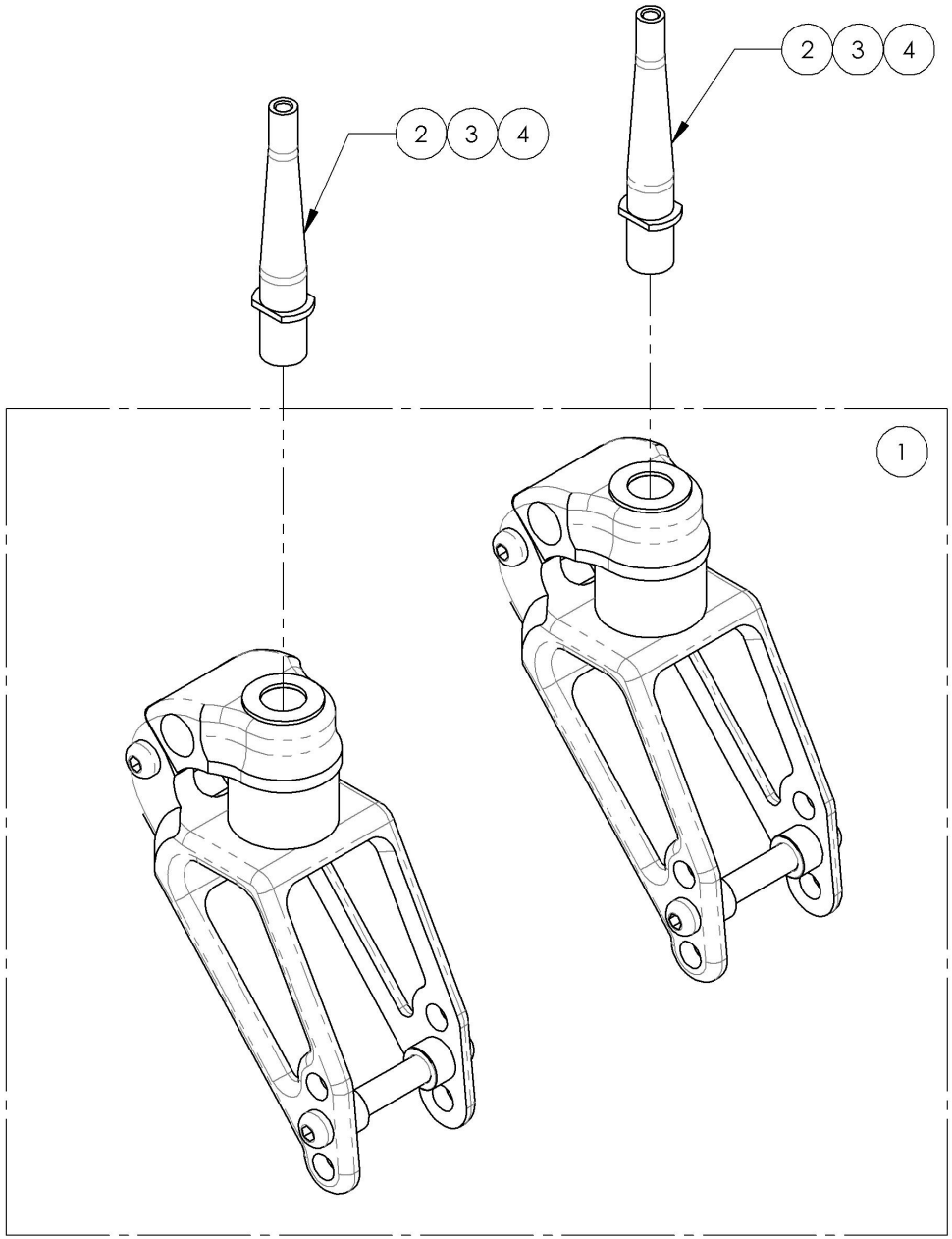

9002413
Suspension Fork - Frog Leg, Anti-Flutter
Caster Housing, STD Stem Bolt

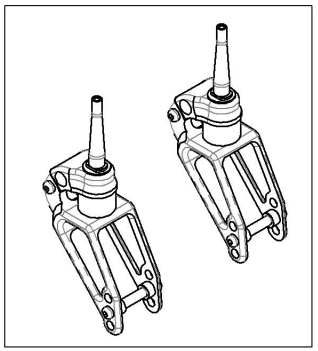

9002414
Suspension Fork - Frog Leg, Anti-Flutter
Caster Housing, +1 in Stem Bolt

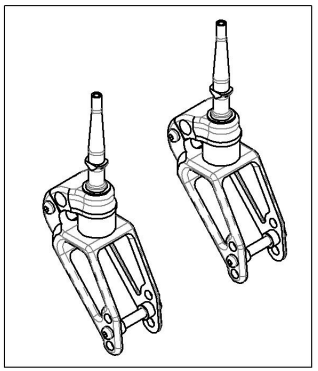

9002415
Suspension Fork - Frog Leg, Anti-Flutter
Caster Housing, +2 in Stem Bolt

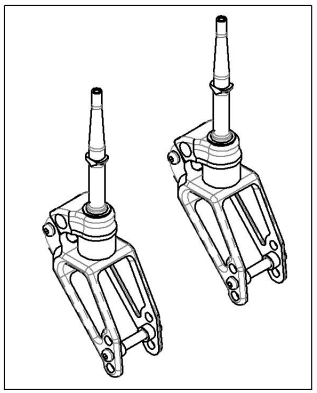

MAKE SURE TO HAVE YOUR SERIAL NUMBER NEARBY WHEN ORDERING PARTS FOR YOUR MOTION COMPOSITES WHEELCHAIR

Front Wheels Catalogue
Caster Lock Pin

ITEM NO.	PARTNO	DESCRIPTION	QTY
1	9001453	Fork - 3 in For Caster Lock Pin	1
2	9001454	Fork - 4 in For Caster Lock Pin	1
3	9001455	Fork - 5 in For Caster Lock Pin	1
4	9001456	Fork - 7 in For Caster Lock Pin	1
5	9001623	Tie Down - Front, Wheelchair Transit, With +1 in Caster Lock Pin	1
6	9001624	Tie Down - Front, Wheelchair Transit, With +2 in Caster Lock Pin	1

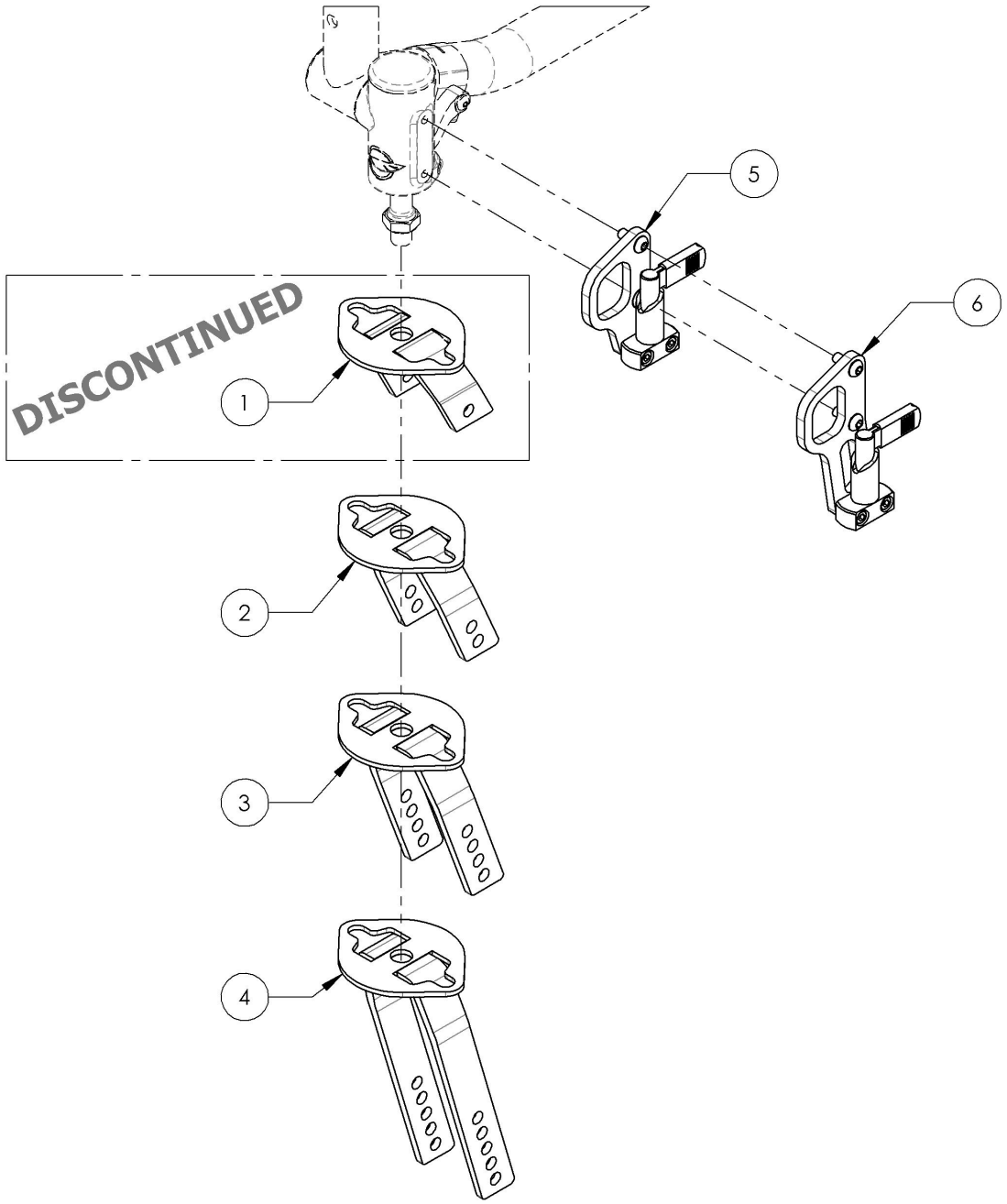

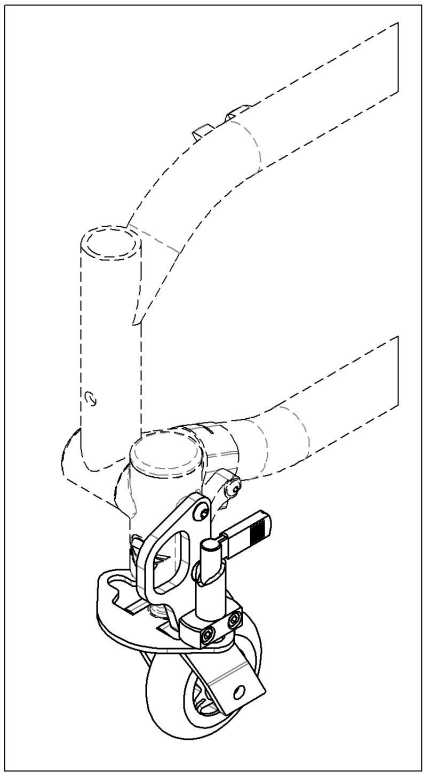

MAKE SURE TO HAVE YOUR SERIAL NUMBER NEARBY WHEN ORDERING PARTS FOR YOUR MOTION COMPOSITES WHEELCHAIR

9001453_9001456
Forks - For Caster Lock Pin

ITEM NO.	PARTNO	DESCRIPTION	9001453 /QTY.	9001454 /QTY.	9001455 /QTY.	9001456 /QTY.
1	22067	3"x1½" MACHINED FORK FOR CASTER LOCK PIN	1	-	-	-
2	22064	4"x2" MACHINED FORK FOR CASTER LOCK PIN	-	1	-	-
3	22065	5"x2" MACHINED FORK FOR CASTER LOCK PIN	-	-	1	-
4	22066	7"x2" MACHINED FORK FOR CASTER LOCK PIN	-	-	-	1
5	22060	CASTER LOCK PIN PLATE	1	1	1	1

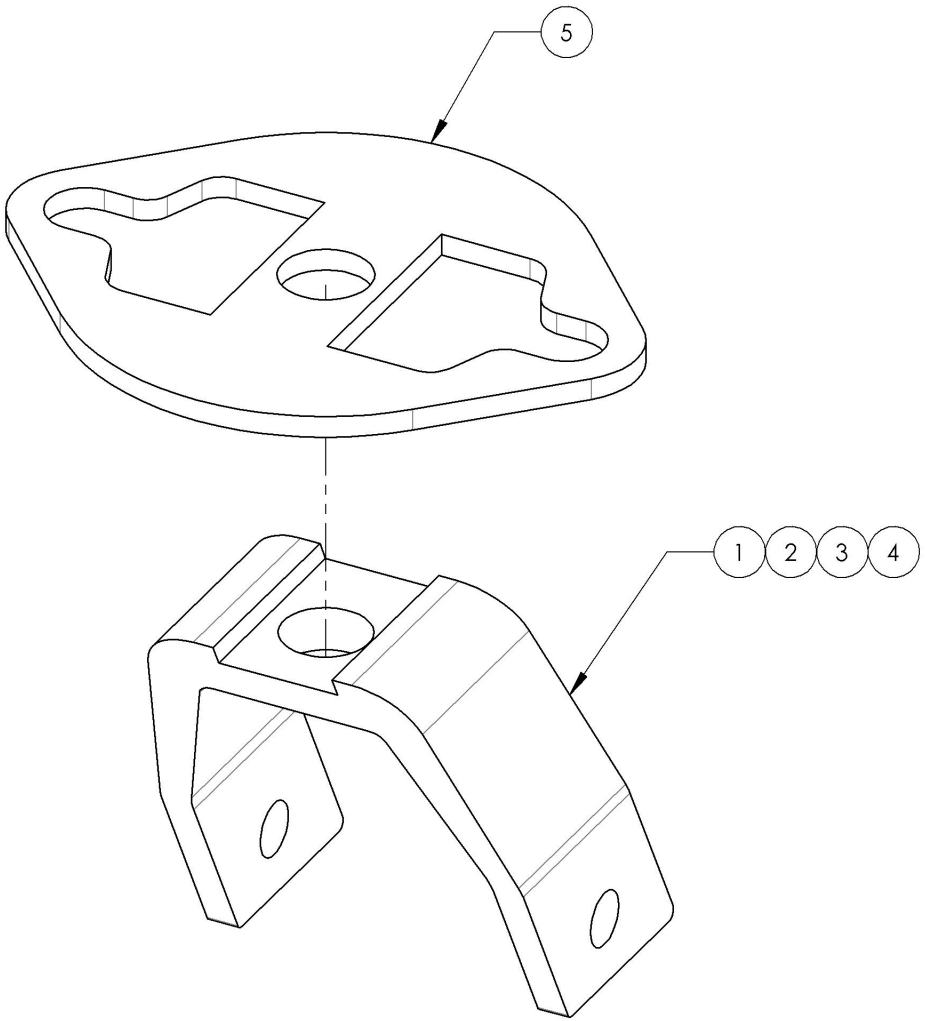

9001453
Fork - 3 in For Caster Lock Pin

DISCONTINUED

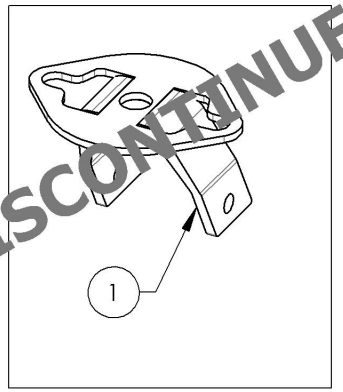

9001454
Fork - 4 in For Caster Lock Pin

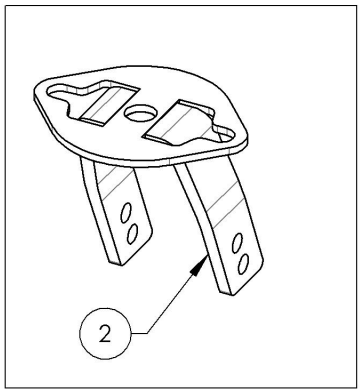

9001455
Fork - 5 in For Caster Lock Pin

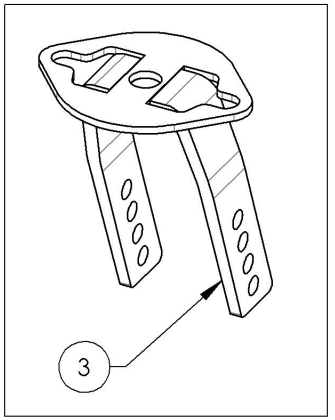

9001456
Fork - 7 in For Caster Lock Pin

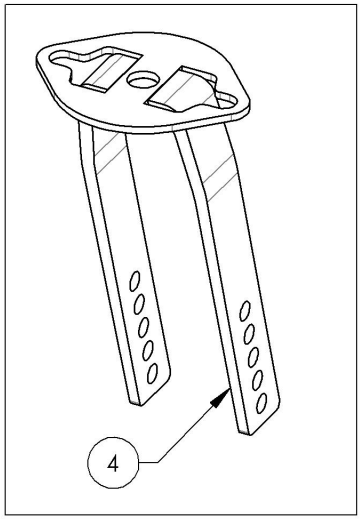

MAKE SURE TO HAVE YOUR SERIAL NUMBER NEARBY WHEN ORDERING PARTS FOR YOUR MOTION COMPOSITES WHEELCHAIR

9001623
Tie Down - Front, Wheelchair Transit, With +1 in Caster Lock Pin

ITEM NO.	PARTNO	DESCRIPTION	9001623 /QTY.
1	22061	FRONT TIE DOWN +1 FOR CASTER LOCK PIN	1
2	90659	BUTTON HEAD CAP SCREW M6X1 X 16mm LONG, FULLY THREADED + BLUE THREADLOCKER - BLACK ZINC	1
3	90864	FLAT HEAD CAP SCREW M6X1 X 12mm LONG, FULLY THREADED + BLUE THREADLOCKER - BLACK ZINC	1
4	22063	SLIDER LOCK FOR CASTER LOCK PIN	1
5	90748	SOCKET CAP SCREW M5X0.8 X 18mm LONG, FULLY THREADED + BLUE TREADLOCKER - BLACK ZINC	2

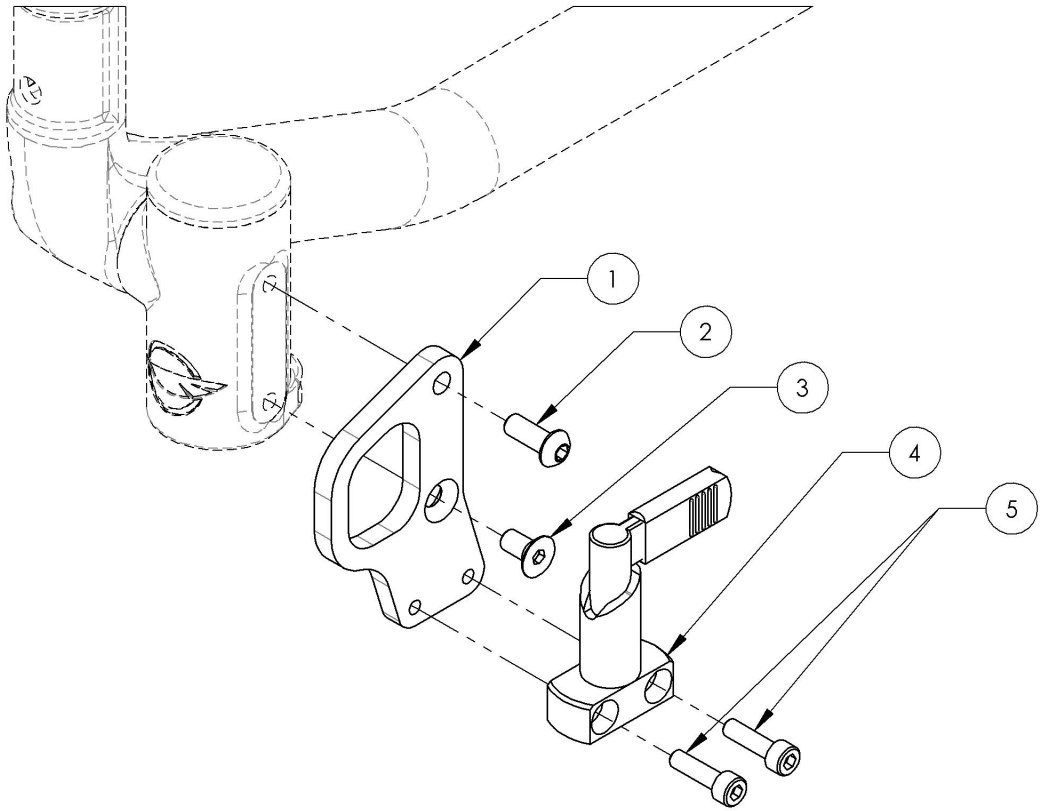

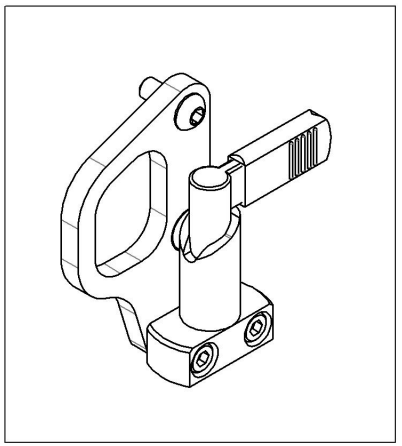

MAKE SURE TO HAVE YOUR SERIAL NUMBER NEARBY WHEN ORDERING PARTS FOR YOUR MOTION COMPOSITES WHEELCHAIR

9001624
Tie Down - Front, Wheelchair Transit, With +2 in Caster Lock Pin

ITEM NO.	PARTNO	DESCRIPTION	9001624 /QTY.
1	22062	FRONT TIE DOWN +2 FOR CASTER LOCK PIN	1
2	90659	BUTTON HEAD CAP SCREW M6X1 X 16mm LONG, FULLY THREADED + BLUE THREADLOCKER - BLACK ZINC	2
3	22063	SLIDER LOCK FOR CASTER LOCK PIN	1
4	90748	SOCKET CAP SCREW M5X0.8 X 18mm LONG, FULLY THREADED + BLUE TREADLOCKER - BLACK ZINC	2

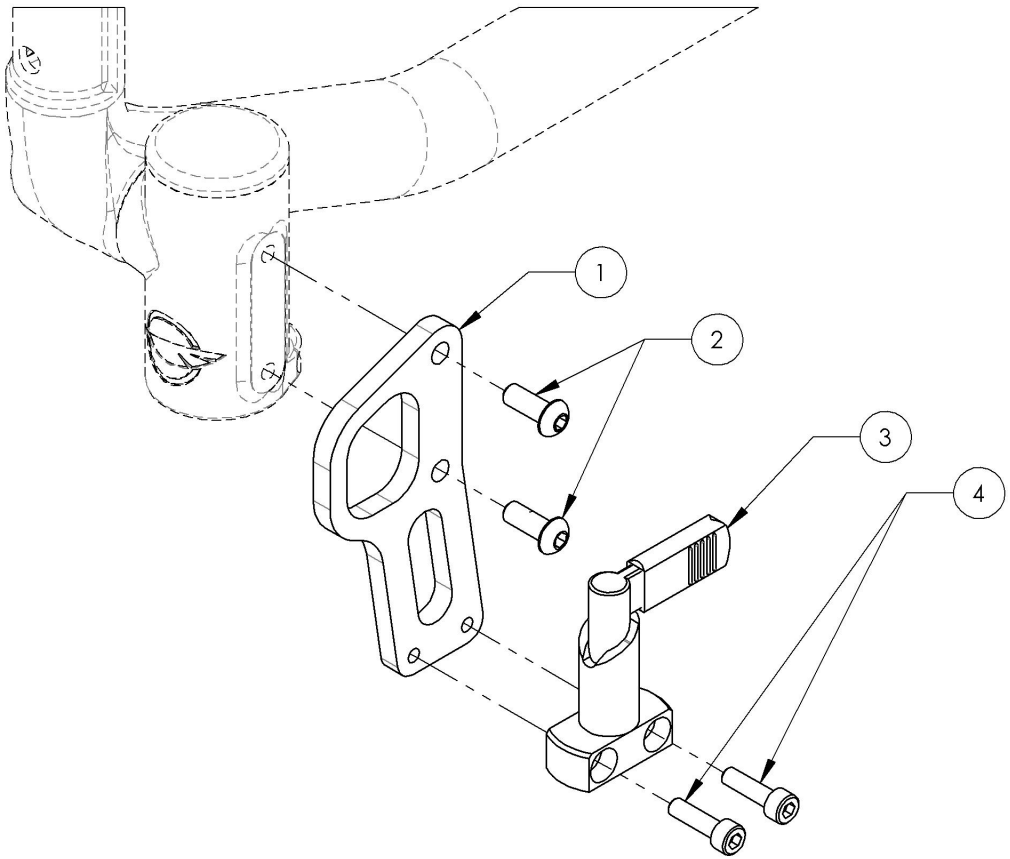

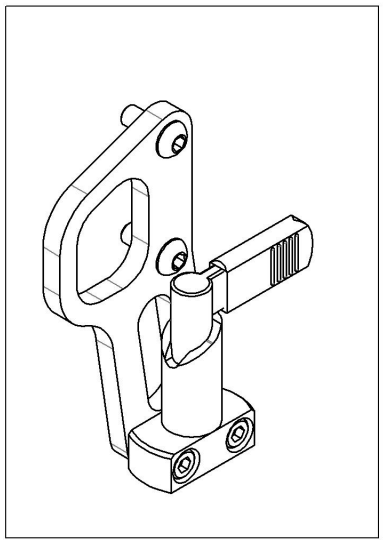

MAKE SURE TO HAVE YOUR SERIAL NUMBER NEARBY WHEN ORDERING PARTS FOR YOUR MOTION COMPOSITES WHEELCHAIR

Front Wheels Catalogue
V2 Caster Housing

ITEM NO.	PARTNO	DESCRIPTION	QTY.
1	9001471	Caster Housing - Right, STD Stem Bolt	1
2	9001474	Caster Housing - Left, STD Stem Bolt	1
3	9001472	Caster Housing - Right, +1 in Stem Bolt	1
4	9001475	Caster Housing - Left, +1 in Stem Bolt	1
5	9001473	Caster Housing - Right, +2 in Stem Bolt	1
6	9001476	Caster Housing - Left, +2 in Stem Bolt	1
7	9001622	Tie Down - Front, Wheelchair Transit	1

REPLACED BY #9001439 TO #9001444

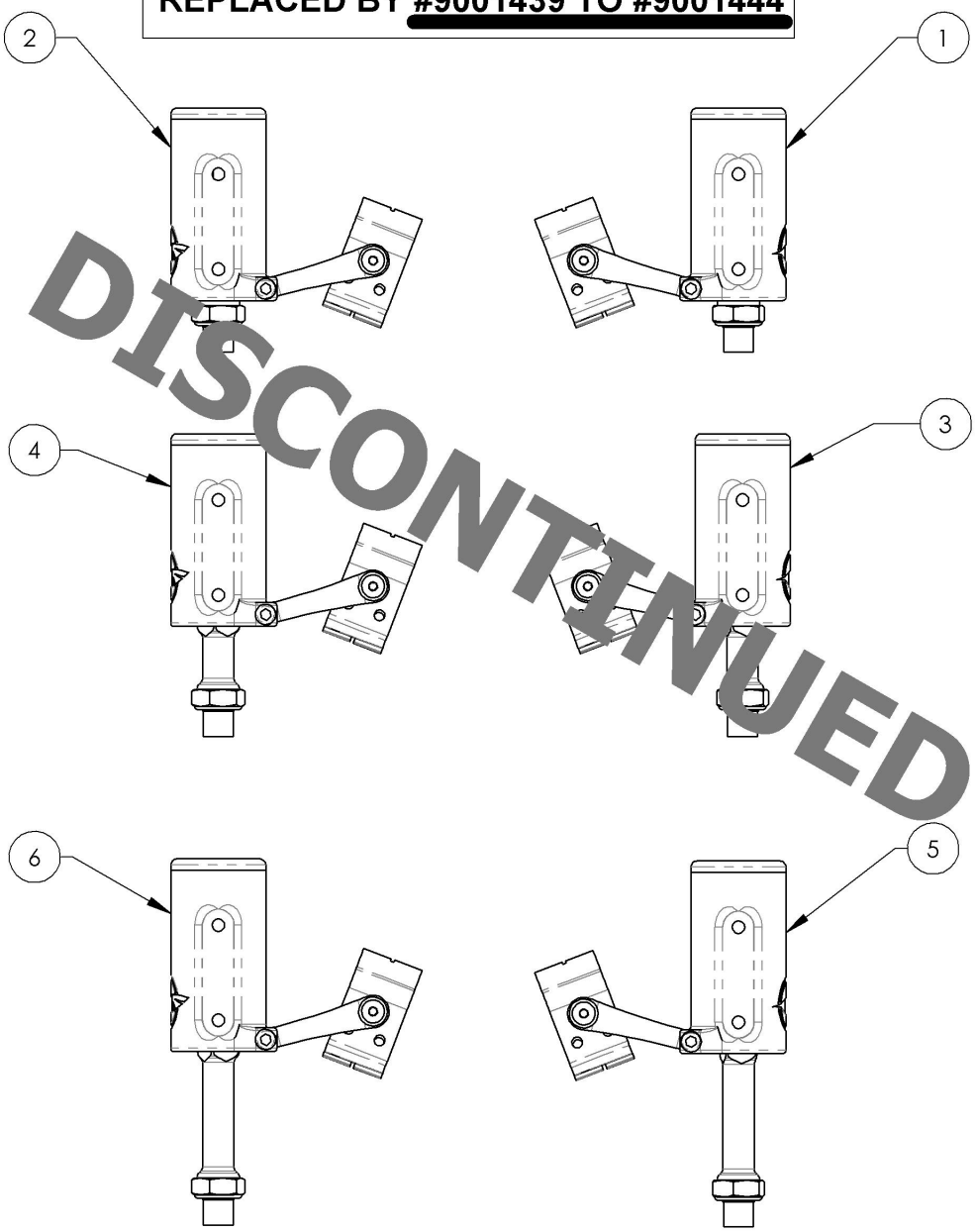

DISCONTINUED

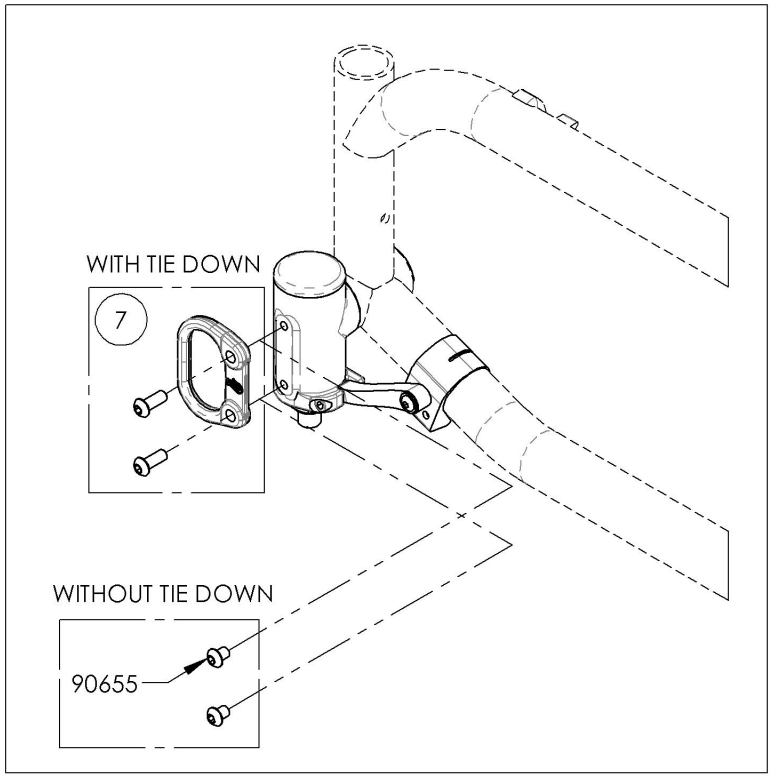

MAKE SURE TO HAVE YOUR SERIAL NUMBER NEARBY WHEN ORDERING PARTS FOR YOUR MOTION COMPOSITES WHEELCHAIR

9001471_9001473
Caster Housing - Right + Stem bolt

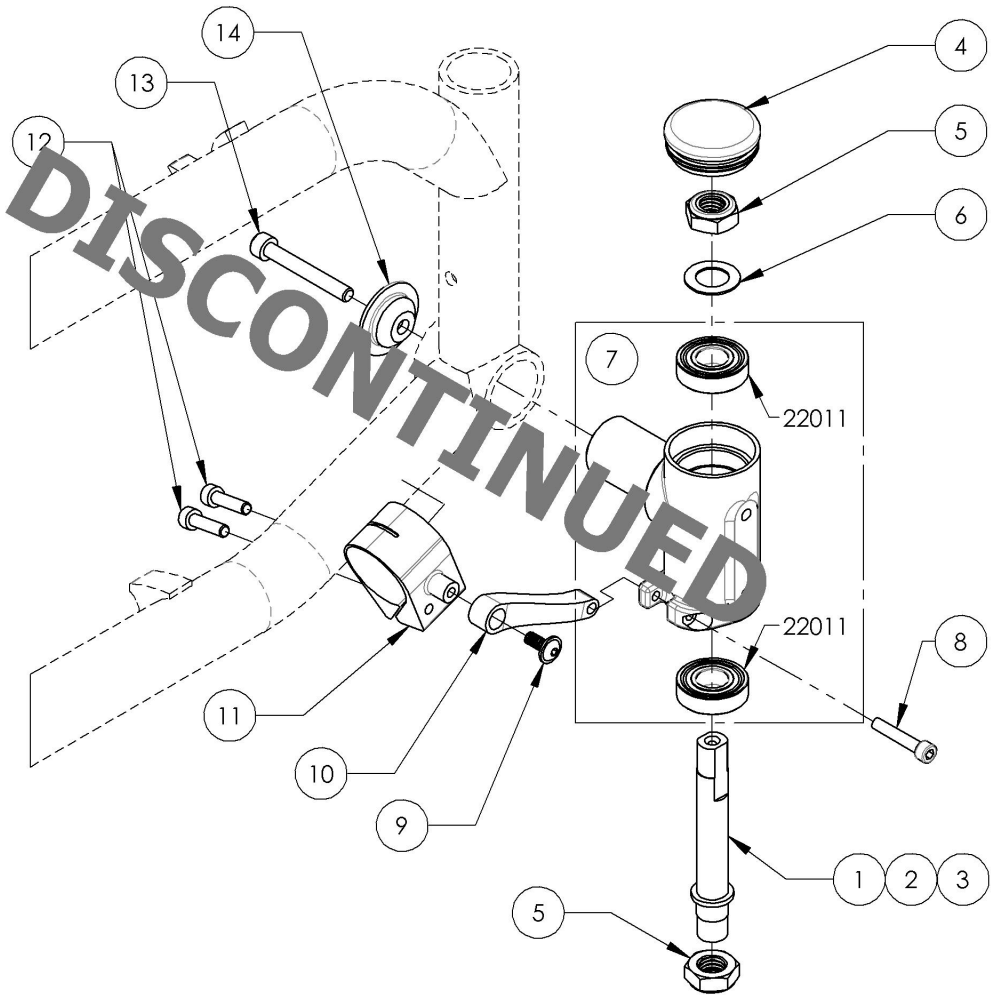

ITEM NO.	PARTNO	DESCRIPTION	9001471 /QTY.	9001472 /QTY.	9001473 /QTY.
1	22031	STEM BOLT STD	1	-	-
2	22032	STEM BOLT + 1	-	1	-
3	22033	STEM BOLT + 2	-	-	1
4	99700	CAP Ø1.5	1	1	1
5	90992	M12 LOW NYLON LOCK	2	2	2
6	99595	WASHER 1_2, 17_32 ID X 7_8 OD X .032 THK	1	1	1
7	22048	BEARING HOUSING RIGHT - ASSEMBLY	1	1	1
8	99114	SOCKET CAP SCREW #10-32 X 1 + BLUE THREADLOCKER	1	1	1
9	90993	FLANGE BUTTON HEAD CAP SCREW, M5X.8 X 12mm + BLUE THREADLOCKER	1	1	1
10	22053	TORQUE ARM V2	1	1	1
11	22052	FRONT WHEEL CLAMP V2	1	1	1
12	90749	SOCKET CAP SCREW M5X0.8 X 20mm LONG, FULLY THREADED + BLUE TREADLOCKER - BLACK ZINC	2	2	2
13	90777	SOCKET CAP SCREW M6X1 X 45mm LONG, 24mm THREADED + BLUE TREADLOCKER - BLACK ZINC	1	1	1
14	22009	HOUSING SIDE CAP	1	1	1

9001471
Caster Housing - Right, STD Stem Bolt

REPLACED BY #9001439

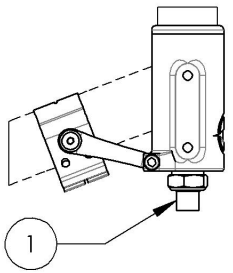

9001472
Caster Housing - Right, +1 in Stem Bolt

REPLACED BY #9001440

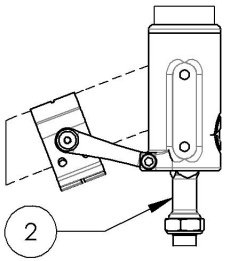

9001473
Caster Housing - Right, +2 in Stem Bolt

REPLACED BY #9001441

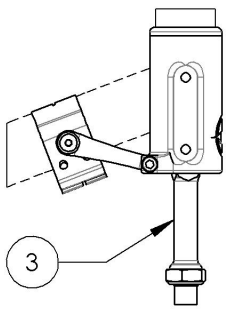

MAKE SURE TO HAVE YOUR SERIAL NUMBER NEARBY WHEN ORDERING PARTS FOR YOUR MOTION COMPOSITES WHEELCHAIR

9001474_9001476
Caster Housing - Left + Stem bolt

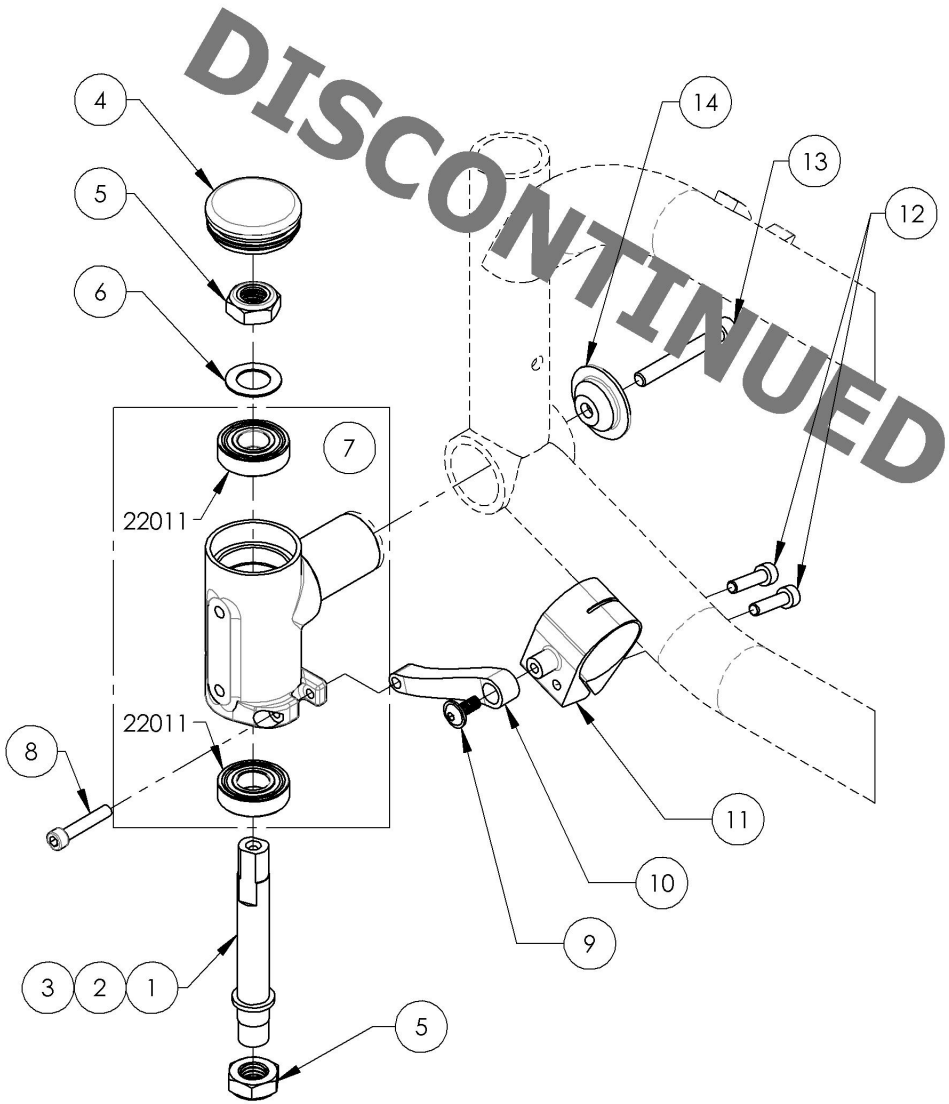

ITEM NO.	PARTNO	DESCRIPTION	9001474 /QTY.	9001475 /QTY.	9001476 /QTY.
1	22031	STEM BOLT STD	1	-	-
2	22032	STEM BOLT + 1	-	1	-
3	22033	STEM BOLT + 2	-	-	1
4	99700	CAP Ø1.5	1	1	1
5	90992	M12 LOW NYLON LOCK	2	2	2
6	99595	WASHER 1_2, 17_32 ID X 7_8 OD X .032 THK	1	1	1
7	22047	BEARING HOUSING LEFT - ASSEMBLY	1	1	1
8	99114	SOCKET CAP SCREW #10-32 X 1 + BLUE THREADLOCKER	1	1	1
9	90993	FLANGE BUTTON HEAD CAP SCREW, M5X.8 X 12mm + BLUE THREADLOCKER	1	1	1
10	22053	TORQUE ARM V2	1	1	1
11	22052	FRONT WHEEL CLAMP V2	1	1	1
12	90749	SOCKET CAP SCREW M5X0.8 X 20mm LONG, FULLY THREADED + BLUE TREADLOCKER - BLACK ZINC	2	2	2
13	90777	SOCKET CAP SCREW M6X1 X 45mm LONG, 24mm THREADED + BLUE TREADLOCKER - BLACK ZINC	1	1	1
14	22009	HOUSING SIDE CAP	1	1	1

9001474
Caster Housing - Left, STD Stem Bolt

REPLACED BY #9001442

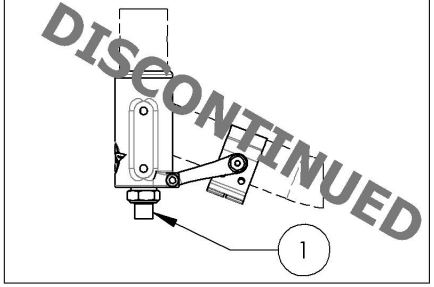

9001475
Caster Housing - Left, +1 in Stem Bolt

REPLACED BY #9001443

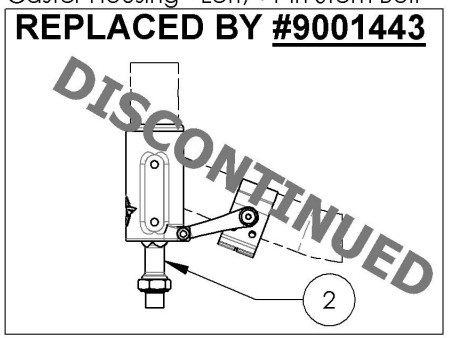

9001476
Caster Housing - Left, +2 in Stem Bolt

REPLACED BY #9001444

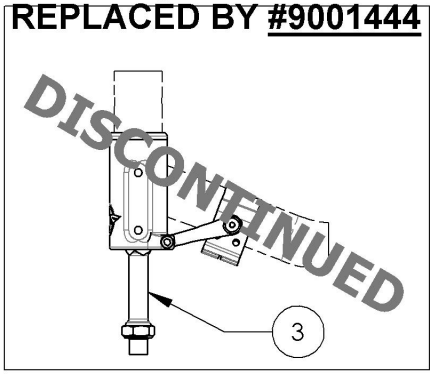

MAKE SURE TO HAVE YOUR SERIAL NUMBER NEARBY WHEN ORDERING PARTS FOR YOUR MOTION COMPOSITES WHEELCHAIR

Front Wheels Catalogue
Anti-Flutter Caster Housing

ITEM NO.	PARTNO	DESCRIPTION	QTY.
1	9001442	Caster Housing - Anti-Flutter, Left, STD Stem Bolt	1
2	9001439	Caster Housing - Anti-Flutter, Right, STD Stem Bolt	1
3	9001443	Caster Housing - Anti-Flutter, Left, +1 in Stem Bolt	1
4	9001440	Caster Housing - Anti-Flutter, Right, +1 in Stem Bolt	1
5	9001444	Caster Housing - Anti-Flutter, Left, +2 in Stem Bolt	1
6	9001441	Caster Housing - Anti-Flutter, Right, +2 in Stem Bolt	1
7	9001622	Tie Down - Front, Wheelchair Transit	1

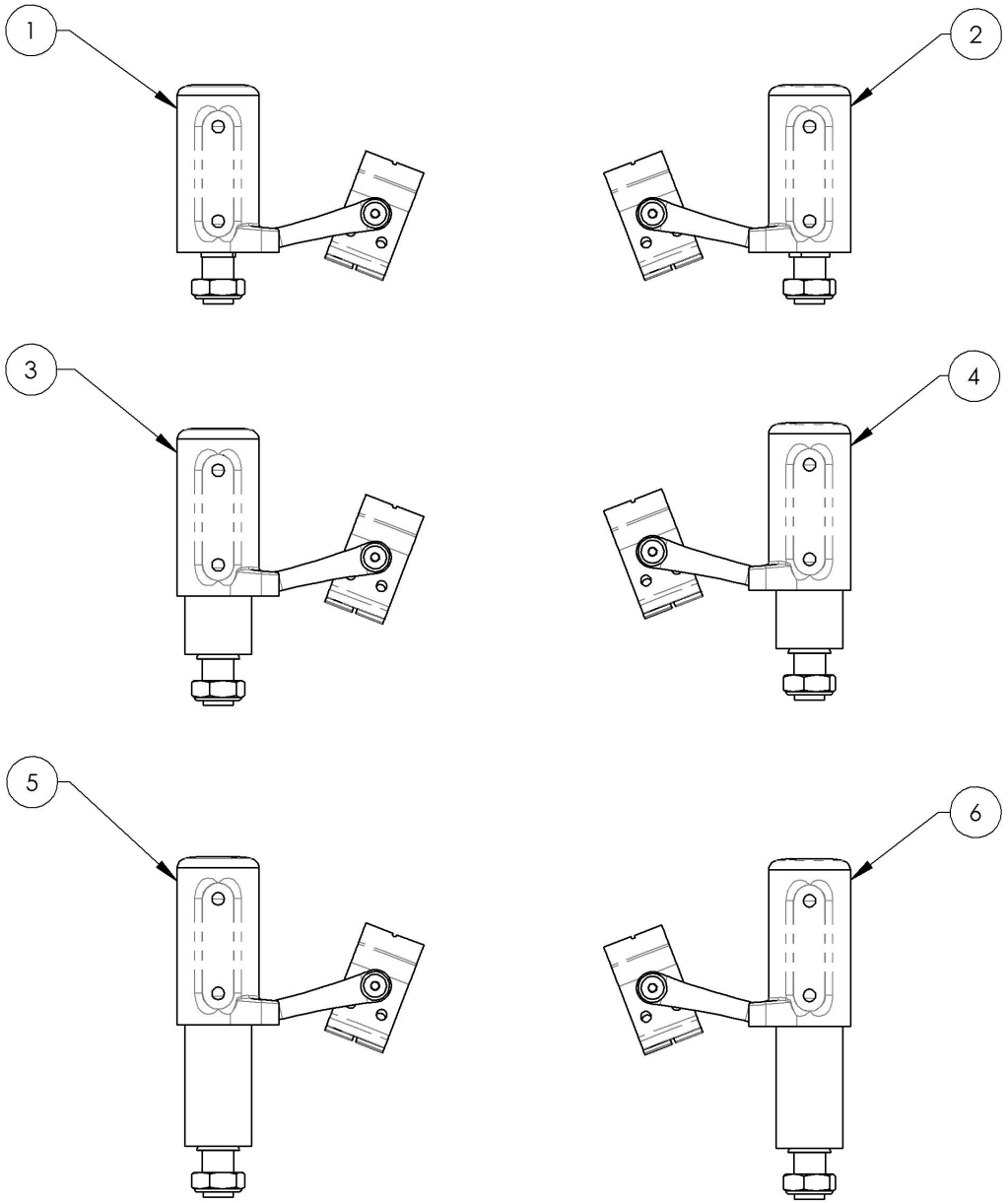

APPLICABLE ON WHEELCHAIRS SINCE 2017/02/13

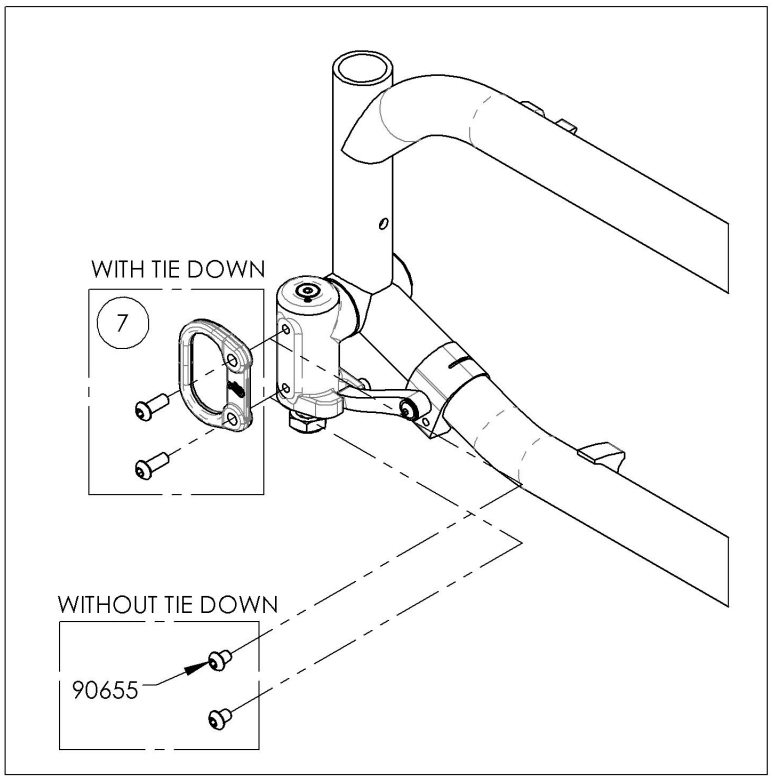

MAKE SURE TO HAVE YOUR SERIAL NUMBER NEARBY WHEN ORDERING PARTS FOR YOUR MOTION COMPOSITES WHEELCHAIR

9001439_9001441
Caster Housing - Anti-Flutter, Right + Stem Bolt

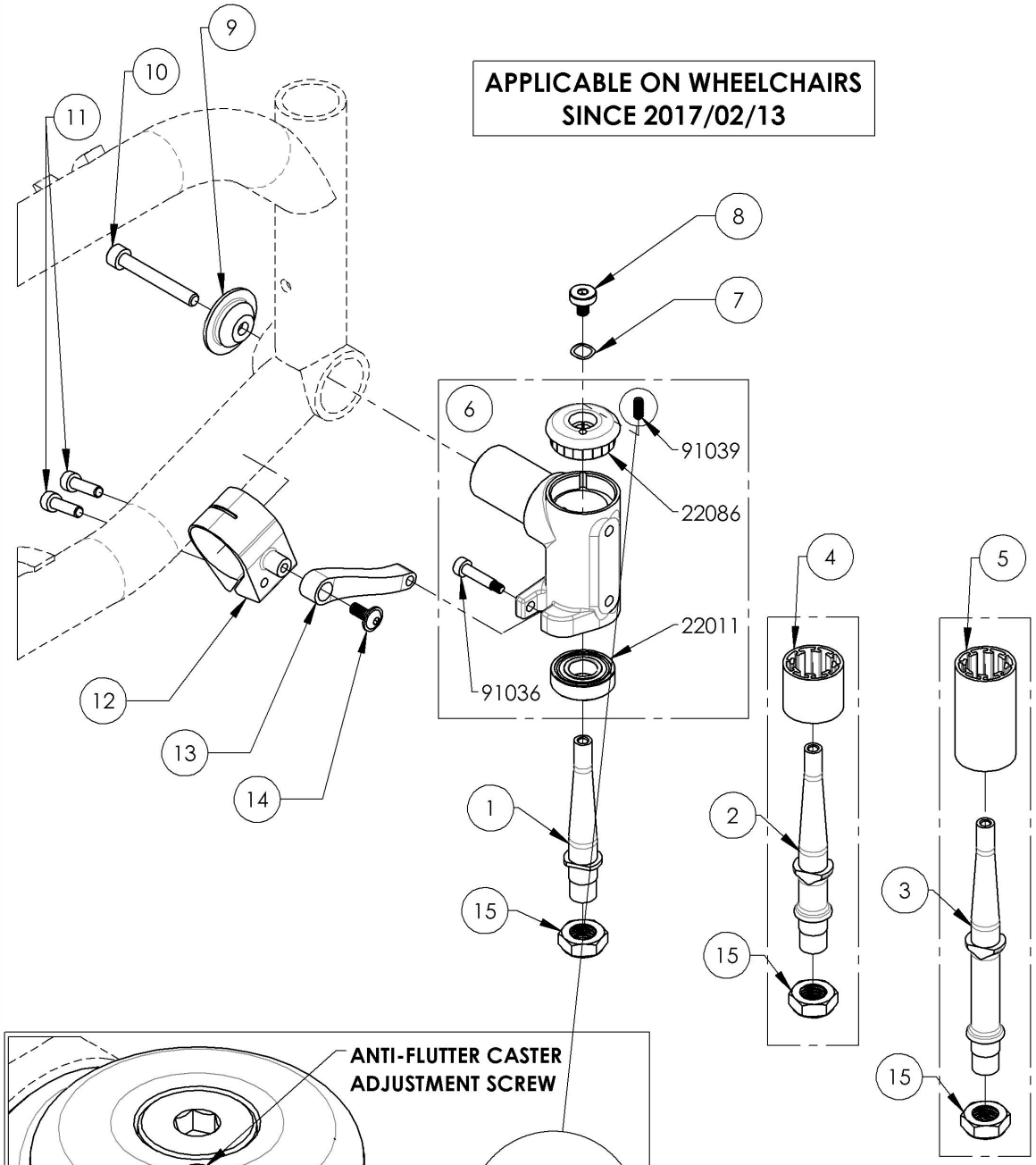

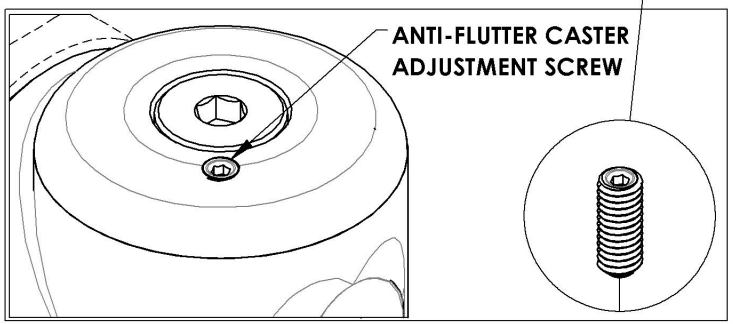

ITEM NO.	PARTNO	DESCRIPTION	9001439 /QTY.	9001440 /QTY.	9001441 /QTY.
1	22090	STEM BOLT STD	1	-	-
2	22091	STEM BOLT + 1 in	-	1	-
3	22092	STEM BOLT + 2 in	-	-	1
4	22149	STEM BOLT COVER +1 in	-	1	-
5	22150	STEM BOLT COVER +2 in	-	-	1
6	22094	BEARING HOUSING - RIGHT (M) - ASSEMBLY	1	1	1
7	22095	TRIPLE-WAVE STEEL WASHER 0.320in ID, 0.437in OD	1	1	1
8	91038	STEM BOLT TOP SCREW	1	1	1
9	22009	HOUSING SIDE CAP	1	1	1
10	90777	SOCKET CAP SCREW M6X1 X 45mm LONG, 24mm THREADED + BLUE TREADLOCKER - BLACK ZINC	1	1	1
11	90748	SOCKET CAP SCREW M5X0.8 X 18mm LONG, FULLY THREADED + BLUE TREADLOCKER - BLACK ZINC	2	2	2
12	22052	FRONT WHEEL CLAMP V2	1	1	1
13	22053	TORQUE ARM V2	1	1	1
14	90993	FLANGE BUTTON HEAD CAP SCREW, M5X.8 X 12mm + BLUE THREADLOCKER	1	1	1
15	90992	M12 LOW NYLON LOCK	1	1	1

9001439
Caster Housing - Anti-Flutter, Right, STD Stem Bolt

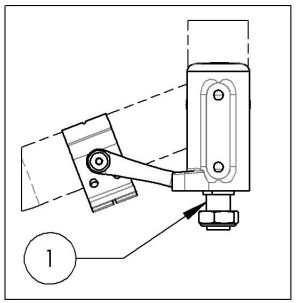

9001440
Caster Housing - Anti-Flutter, Right, +1 in Stem Bolt

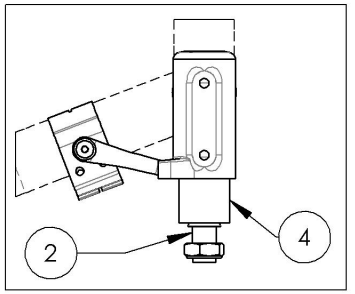

9001441
Caster Housing - Anti-Flutter, Right, +2 in Stem Bolt

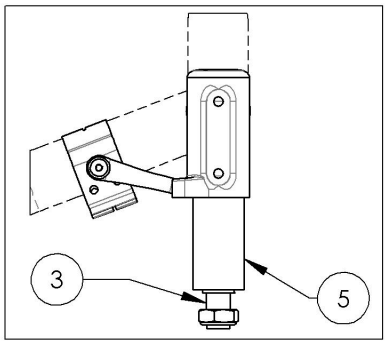

MAKE SURE TO HAVE YOUR SERIAL NUMBER NEARBY WHEN ORDERING PARTS FOR YOUR MOTION COMPOSITES WHEELCHAIR

9001442_9001444
Caster Housing - Anti-Flutter, Left + Stem Bolt

APPLICABLE ON WHEELCHAIRS SINCE 2017/02/13

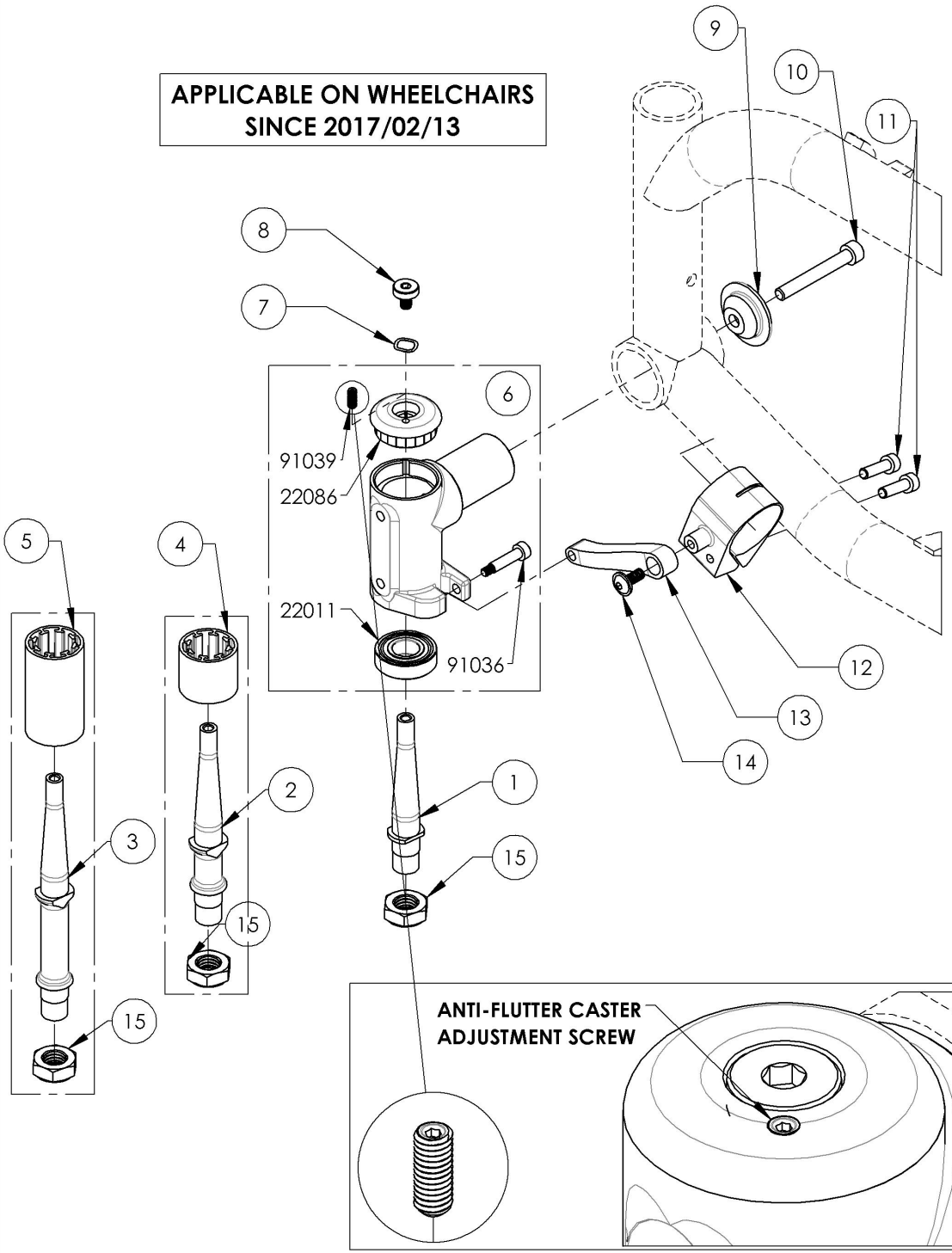

ITEM NO.	PARTNO	DESCRIPTION	9001442 /QTY.	9001443 /QTY.	9001444 /QTY.
1	22090	STEM BOLT STD	1	-	-
2	22091	STEM BOLT + 1 in	-	1	-
3	22092	STEM BOLT + 2 in	-	-	1
4	22149	STEM BOLT COVER +1 in	-	1	-
5	22150	STEM BOLT COVER +2 in	-	-	1
6	22093	BEARING HOUSING - LEFT (M) - ASSEMBLY	1	1	1
7	22095	TRIPLE-WAVE STEEL WASHER 0.320in ID, 0.437in OD	1	1	1
8	91038	STEM BOLT TOP SCREW	1	1	1
9	22009	HOUSING SIDE CAP	1	1	1
10	90777	SOCKET CAP SCREW M6X1 X 45mm LONG, 24mm THREADED + BLUE TREADLOCKER - BLACK ZINC	1	1	1
11	90748	SOCKET CAP SCREW M5X0.8 X 18mm LONG, FULLY THREADED + BLUE TREADLOCKER - BLACK ZINC	2	2	2
12	22052	FRONT WHEEL CLAMP V2	1	1	1
13	22053	TORQUE ARM V2	1	1	1
14	90993	FLANGE BUTTON HEAD CAP SCREW, M5X.8 X 12mm + BLUE THREADLOCKER	1	1	1
15	90992	M12 LOW NYLON LOCK	1	1	1

9001442
Caster Housing - Anti-Flutter, Left, STD Stem Bolt

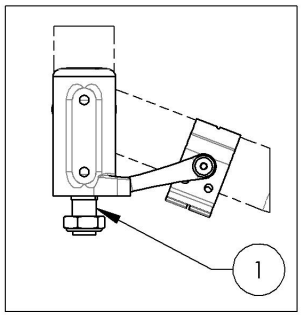

9001443
Caster Housing - Anti-Flutter, Left, +1 in Stem Bolt

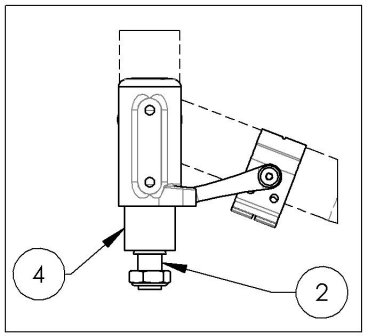

9001444
Caster Housing - Anti-Flutter, Left, +2 in Stem Bolt

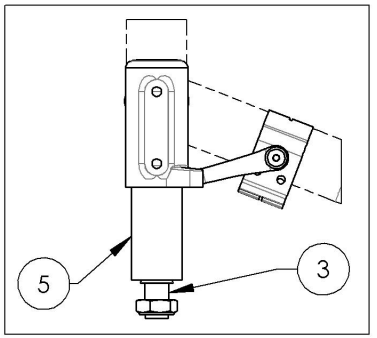

MAKE SURE TO HAVE YOUR SERIAL NUMBER NEARBY WHEN ORDERING PARTS FOR YOUR MOTION COMPOSITES WHEELCHAIR

9001622
Tie Down - Front, Wheelchair Transit

ITEM NO.	PARTNO	DESCRIPTION	9001622 /QTY.
1	22004	FRONT TIE DOWN	1
2	90659	BUTTON HEAD CAP SCREW M6X1 X 16mm LONG, FULLY THREADED + BLUE THREADLOCKER - BLACK ZINC	2

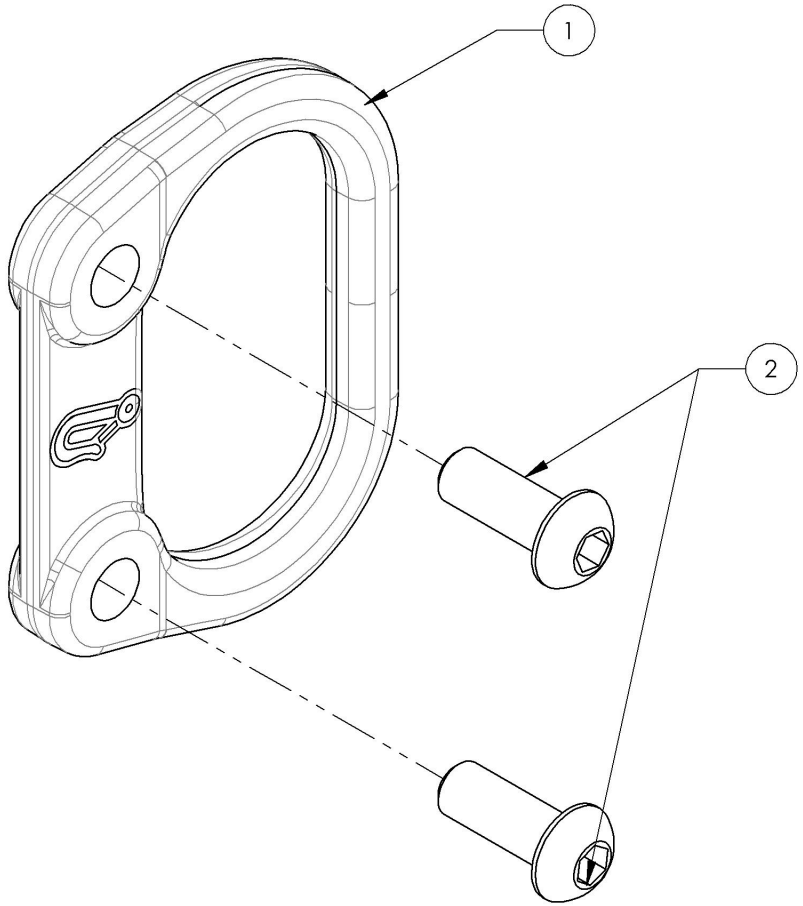

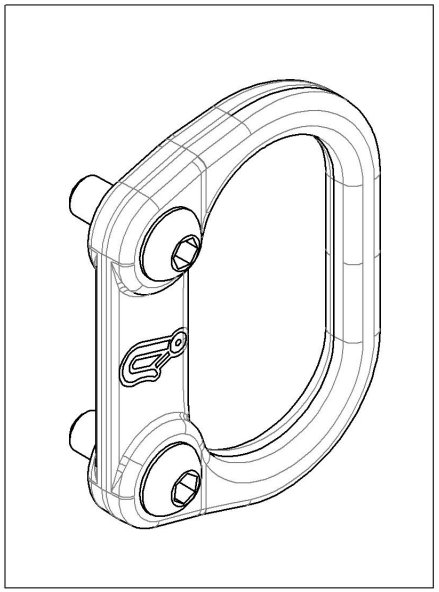

MAKE SURE TO HAVE YOUR SERIAL NUMBER NEARBY WHEN ORDERING PARTS FOR YOUR MOTION COMPOSITES WHEELCHAIR

Front Wheels Catalogue
Hardware

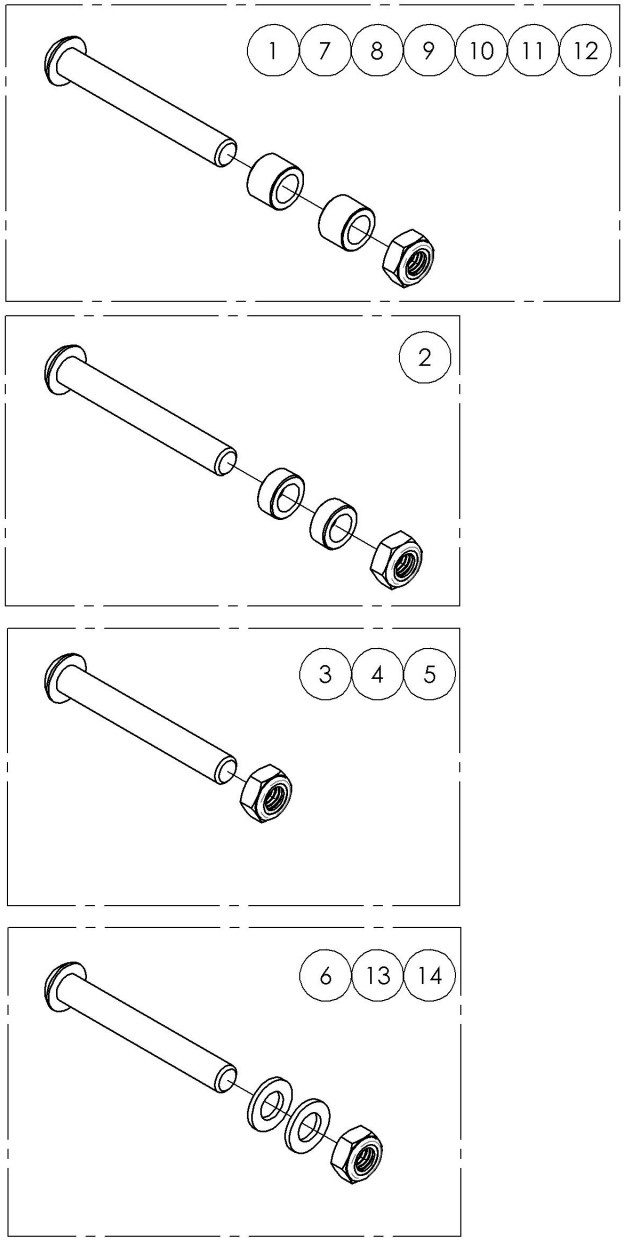

ITEM NO.	PARTNO	DESCRIPTION	QTY.
1	9001416	Fork - Hardware For Composites Caster, 3x1 in	1
2	9001417	Fork - Hardware For Composites Caster, 4x1 in	1
3	9001418	Fork - Hardware For Composites Caster, 5x1 in	1
4	9001419	Fork - Hardware For Composites Caster, 6x1 in	1
5	9001420	Fork - Hardware For Composites Caster, 7x1 in	1
6	9001421	Fork - Hardware For Composites Caster, 8x1 in	1
7	9001422	Fork - Hardware For Newton Ultracaster, 4x1½ in	1
8	9001423	Fork - Hardware For Newton Ultracaster, 5x1½ in	1
9	9001424	Fork - Hardware For Newton Ultracaster, 6x1½ in	1
10	9001425	Fork - Hardware For Court Wheel Aluminum Caster, 4x1 in	1
11	9001426	Fork - Hardware For Court Wheel Aluminum Caster, 5x1 in	1
12	9001427	Fork - Hardware For Court Wheel Aluminum Caster, 6x1 in	1
13	9001428	Fork - Hardware For Pneumatic Caster, 6x1¼ in	1
14	9001429	Fork - Hardware For Pneumatic Caster, 8x1¼ in	1

MAKE SURE TO HAVE YOUR SERIAL NUMBER NEARBY WHEN ORDERING PARTS FOR YOUR MOTION COMPOSITES WHEELCHAIR

Footrests Catalogue
Footrests - Swing-In/Swing-Out

AVAILABLE COLORS
(Specify Color)

ITEM NO.	PARTNO	DESCRIPTION	QTY
1	9002946	Footrest - Swing-In/Swing-Out, Right, 60°, Short Extension - Black	1
2	9002948	Footrest - Swing-In/Swing-Out, Left, 60°, Short Extension - Black	1
3	9002950	Footrest - Swing-In/Swing-Out, Right, 60°, Short Extension (Specify Color)	1
4	9002953	Footrest - Swing-In/Swing-Out, Left, 60°, Short Extension (Specify Color)	1
5	9002947	Footrest - Swing-In/Swing-Out, Right, 70°, Short Extension - Black	1
6	9002949	Footrest - Swing-In/Swing-Out, Left, 70°, Short Extension - Black	1
7	9002951	Footrest - Swing-In/Swing-Out, Right, 70°, Short Extension (Specify Color)	1
8	9002954	Footrest - Swing-In/Swing-Out, Left, 70°, Short Extension (Specify Color)	1
9	9003081	Footrest - Swing-In/Swing-Out, Right, 80°, Short Extension - Black	1
10	9003082	Footrest - Swing-In/Swing-Out, Left, 80°, Short Extension - Black	1
11	9003083	Footrest - Swing-In/Swing-Out, Right, 80°, Short Extension (Specify Color)	1
12	9003084	Footrest - Swing-In/Swing-Out, Left, 80°, Short Extension (Specify Color)	1
13	9001330	Footrest - Swing-In/Swing-Out, Right, 90°, Short Extension - Black	1
14	9001333	Footrest - Swing-In/Swing-Out, Left, 90°, Short Extension - Black	1
15	9001336	Footrest - Swing-In/Swing-Out, Right, 90°, Short Extension (Specify Color)	1
16	9001339	Footrest - Swing-In/Swing-Out, Left, 90°, Short Extension (Specify Color)	1

ITEM NO.	PARTNO	DESCRIPTION	QTY
17	9001328	Footrest - Swing-In/Swing-Out, Right, 60°, Long Extension - Black	1
18	9001331	Footrest - Swing-In/Swing-Out, Left, 60°, Long Extension - Black	1
19	9001334	Footrest - Swing-In/Swing-Out, Right, 60°, Long Extension (Specify Color)	1
20	9001337	Footrest - Swing-In/Swing-Out, Left, 60°, Long Extension (Specify Color)	1
21	9001329	Footrest - Swing-In/Swing-Out, Right, 70°, Long Extension - Black	1
22	9001332	Footrest - Swing-In/Swing-Out, Left, 70°, Long Extension - Black	1
23	9001335	Footrest - Swing-In/Swing-Out, Right, 70°, Long Extension (Specify Color)	1
24	9001338	Footrest - Swing-In/Swing-Out, Left, 70°, Long Extension (Specify Color)	1
25	9003085	Footrest - Swing-In/Swing-Out, Right, 80°, Long Extension - Black	1
26	9003086	Footrest - Swing-In/Swing-Out, Left, 80°, Long Extension - Black	1
27	9003087	Footrest - Swing-In/Swing-Out, Right, 80°, Long Extension (Specify Color)	1
28	9003088	Footrest - Swing-In/Swing-Out, Left, 80°, Long Extension (Specify Color)	1
29	9002916	Footrest - Swing-In/Swing-Out, Right, 90°, Long Extension - Black	1
30	9002917	Footrest - Swing-In/Swing-Out, Left, 90°, Long Extension - Black	1
31	9002955	Footrest - Swing-In/Swing-Out, Right, 90°, Long Extension (Specify Color)	1
32	9002952	Footrest - Swing-In/Swing-Out, Left, 90°, Long Extension (Specify Color)	1

SHORT EXTENSION RANGE 60° & 70°
- 13.5 - 17" (Cut 2 Segments)
- 14.5 - 18" (Cut 1 Segment)
- **15.5 - 19" (No Cut)***

SHORT EXTENSION RANGE 80°
- 13.5 - 16" (Cut 2 Segments)
- 14.5 - 17" (Cut 1 Segment)
- **15.5 - 18" (No Cut)***

LONG EXTENSION RANGE 60°, 70° & 80°
- 14.5 - 19.5" (Cut 1 Segment)
- **15.5 - 20.5" (No Cut)***

*Parts will not be cut if not requested

SHORT EXTENSION RANGE 90°
- 11.5 - 14" (No Cut)

LONG EXTENSION RANGE 90°
- 14 - 17" (No Cut)

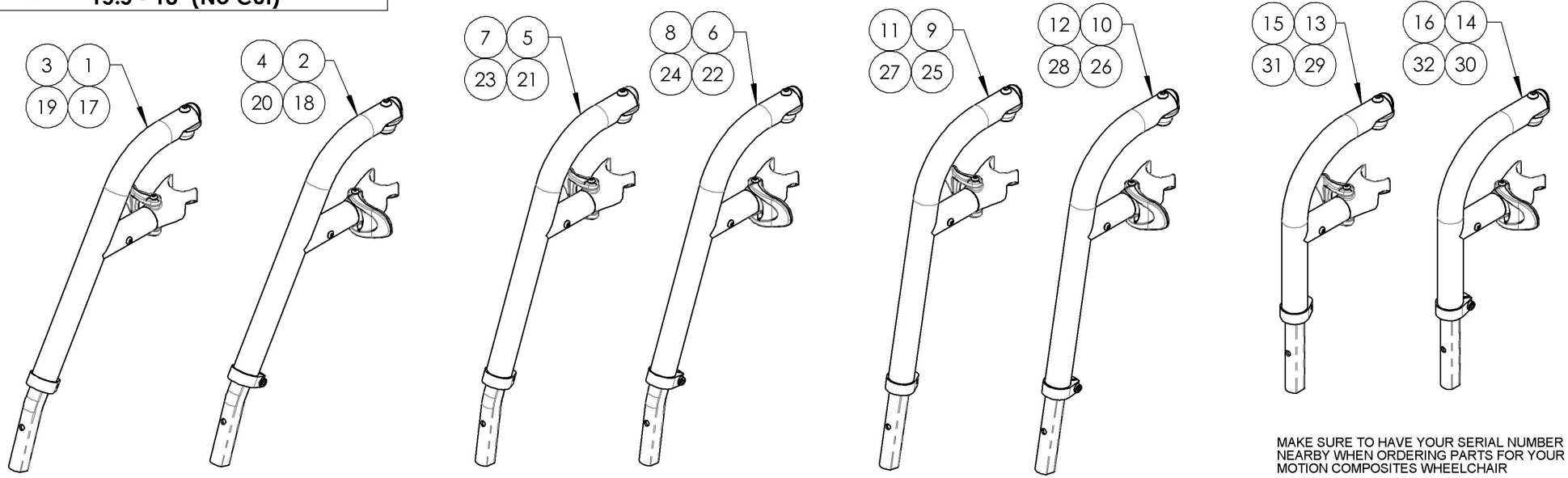

MAKE SURE TO HAVE YOUR SERIAL NUMBER NEARBY WHEN ORDERING PARTS FOR YOUR MOTION COMPOSITES WHEELCHAIR

9002946_9002947
Footrest - Swing-In/Swing-Out, Right, 60˚ & 70˚, Short Extension - Black

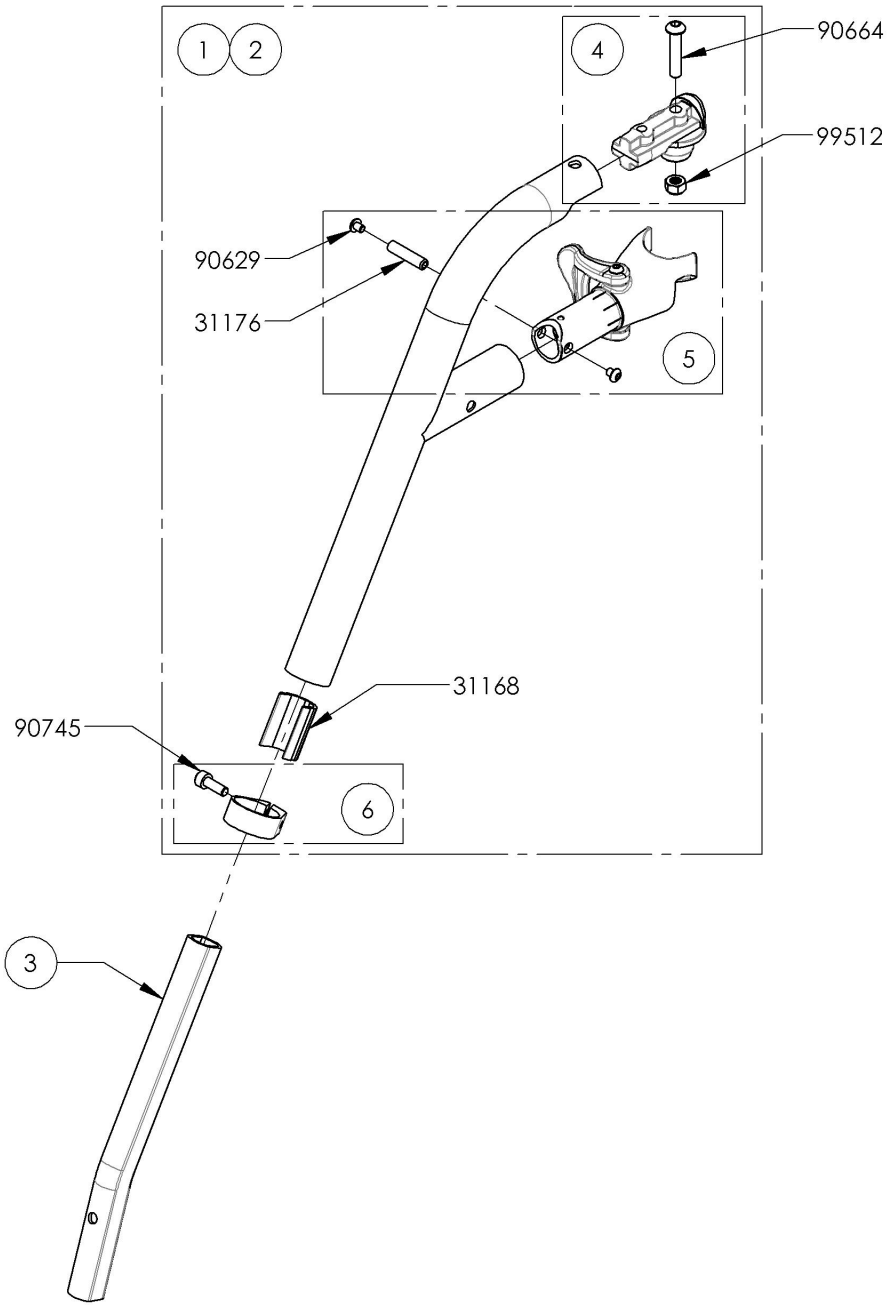

ITEM NO.	PARTNO	DESCRIPTION	9002946 /QTY.	9002947 /QTY.	REPLACEMENT PARTS/QTY.
1	31543	V2 60 DEG LEGREST, RIGHT - ASSEMBLY	1	-	-
2	31545	V2 70 DEG LEGREST, RIGHT - ASSEMBLY	-	1	-
3	31154	V2 FOOTREST SHORT EXTENSION	1	1	-
4	31551	V2 FOOTREST PIVOT - ASSEMBLY	-	-	1
5	31550	V2 FOOTREST HOUSING RIGHT - ASSEMBLY	-	-	1
6	31552	V2 FOOTREST EXTENSION RIGHT CLAMP - ASSEMBLY	-	-	1

9002946 -
Footrest - Swing-In/Swing-Out, Right, 60°, Short Extension - Black

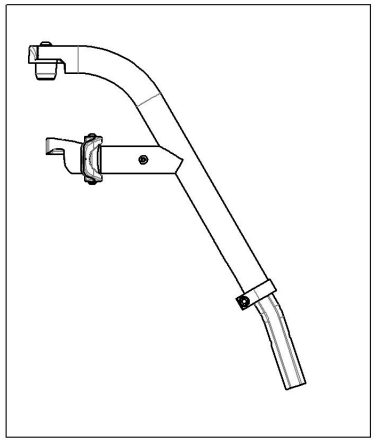

9002947 -
Footrest - Swing-In/Swing-Out, Right, 70°, Short Extension - Black

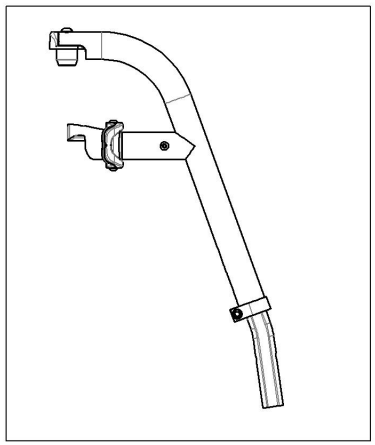

MAKE SURE TO HAVE YOUR SERIAL NUMBER NEARBY WHEN ORDERING PARTS FOR YOUR MOTION COMPOSITES WHEELCHAIR

9002948_9002949
Footrest - Swing-In/Swing-Out, Left, 60˚ & 70˚, Short Extension - Black

ITEM NO.	PARTNO	DESCRIPTION	9002948 /QTY.	9002949 /QTY.	REPLACEMENT PARTS/QTY.
1	31544	V2 60 DEG LEGREST, LEFT - ASSEMBLY	1	-	-
2	31546	V2 70 DEG LEGREST, LEFT - ASSEMBLY	-	1	-
3	31154	V2 FOOTREST SHORT EXTENSION	1	1	-
4	31551	V2 FOOTREST PIVOT - ASSEMBLY	-	-	1
5	31549	V2 FOOTREST HOUSING LEFT - ASSEMBLY	-	-	1
6	31553	V2 FOOTREST EXTENSION LEFT CLAMP - ASSEMBLY	-	-	1

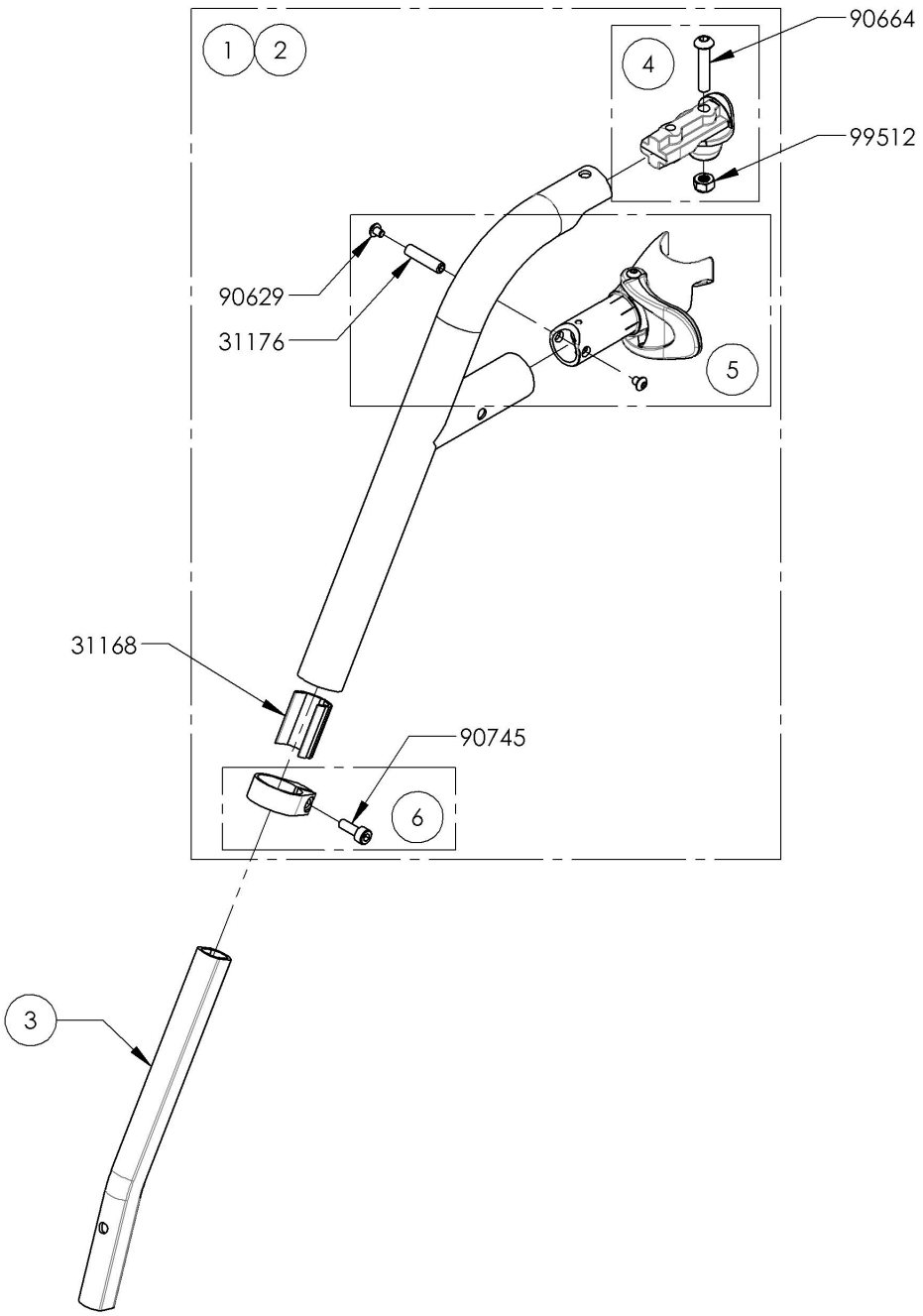

9002948 -
Footrest - Swing-In/Swing-Out,
Left, 60°, Short Extension - Black

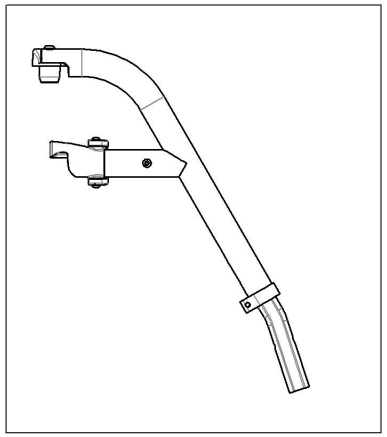

9002949 -
Footrest - Swing-In/Swing-Out,
Left, 70°, Short Extension - Black

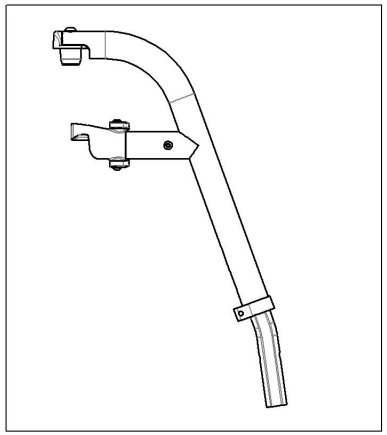

MAKE SURE TO HAVE YOUR SERIAL NUMBER NEARBY WHEN ORDERING PARTS FOR YOUR MOTION COMPOSITES WHEELCHAIR

9002950_9002951
Footrest - Swing-In/Swing-Out, Right, 60˚ & 70˚, Short Extension (Specify Color)

ITEM NO.	PARTNO	DESCRIPTION	9002950 /QTY.	9002951 /QTY.
1	31551	V2 FOOTREST PIVOT - ASSEMBLY	1	1
2	31550	V2 FOOTREST HOUSING RIGHT - ASSEMBLY	1	1
3	31168	V2 FOOTREST GUIDE SLEEVE	1	1
4	31552	V2 FOOTREST EXTENSION RIGHT CLAMP - ASSEMBLY	1	1
5	31154	V2 FOOTREST SHORT EXTENSION	1	1

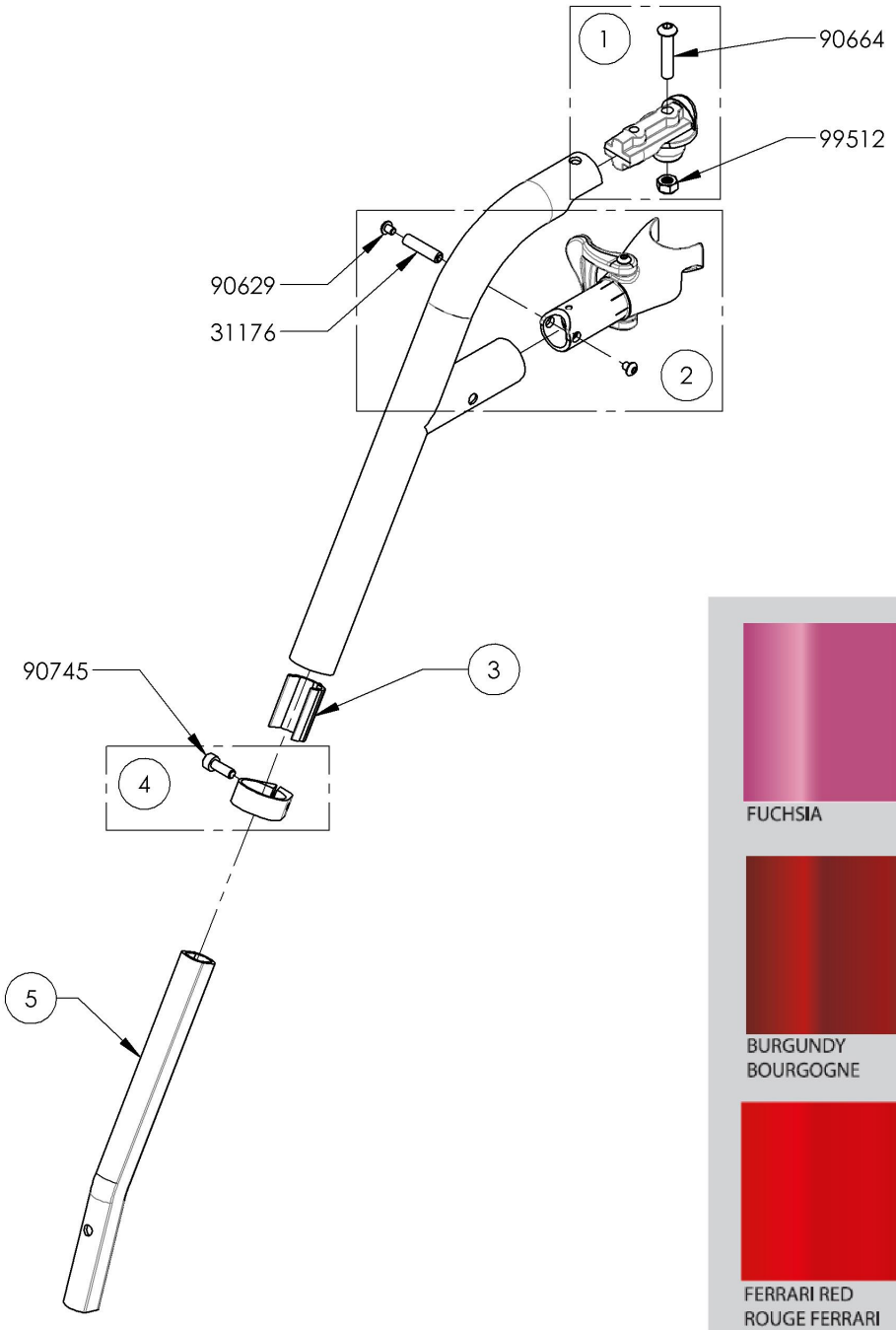

9002950 -
Footrest - Swing-In/Swing-Out, Right, 60°, Short Extension (Specify Color)

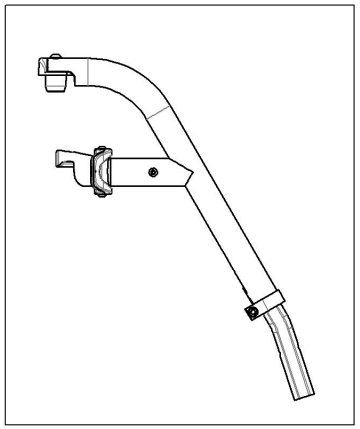

9002951 -
Footrest - Swing-In/Swing-Out, Right, 70°, Short Extension (Specify Color)

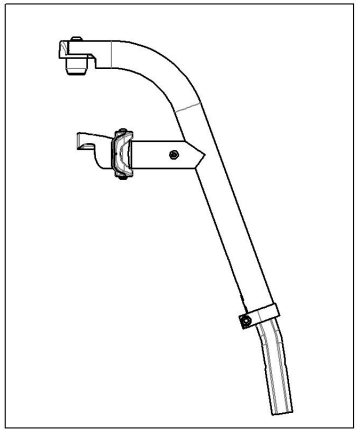

MAKE SURE TO HAVE YOUR SERIAL NUMBER NEARBY WHEN ORDERING PARTS FOR YOUR MOTION COMPOSITES WHEELCHAIR

9002953_9002954
Footrest - Swing-In/Swing-Out, Left, 60˚ & 70˚, Short Extension (Specify Color)

ITEM NO.	PARTNO	DESCRIPTION	9002953 /QTY.	9002954 /QTY.
1	31551	V2 FOOTREST PIVOT - ASSEMBLY	1	1
2	31549	V2 FOOTREST HOUSING LEFT - ASSEMBLY	1	1
3	31168	V2 FOOTREST GUIDE SLEEVE	1	1
4	31553	V2 FOOTREST EXTENSION LEFT CLAMP - ASSEMBLY	1	1
5	31154	V2 FOOTREST SHORT EXTENSION	1	1

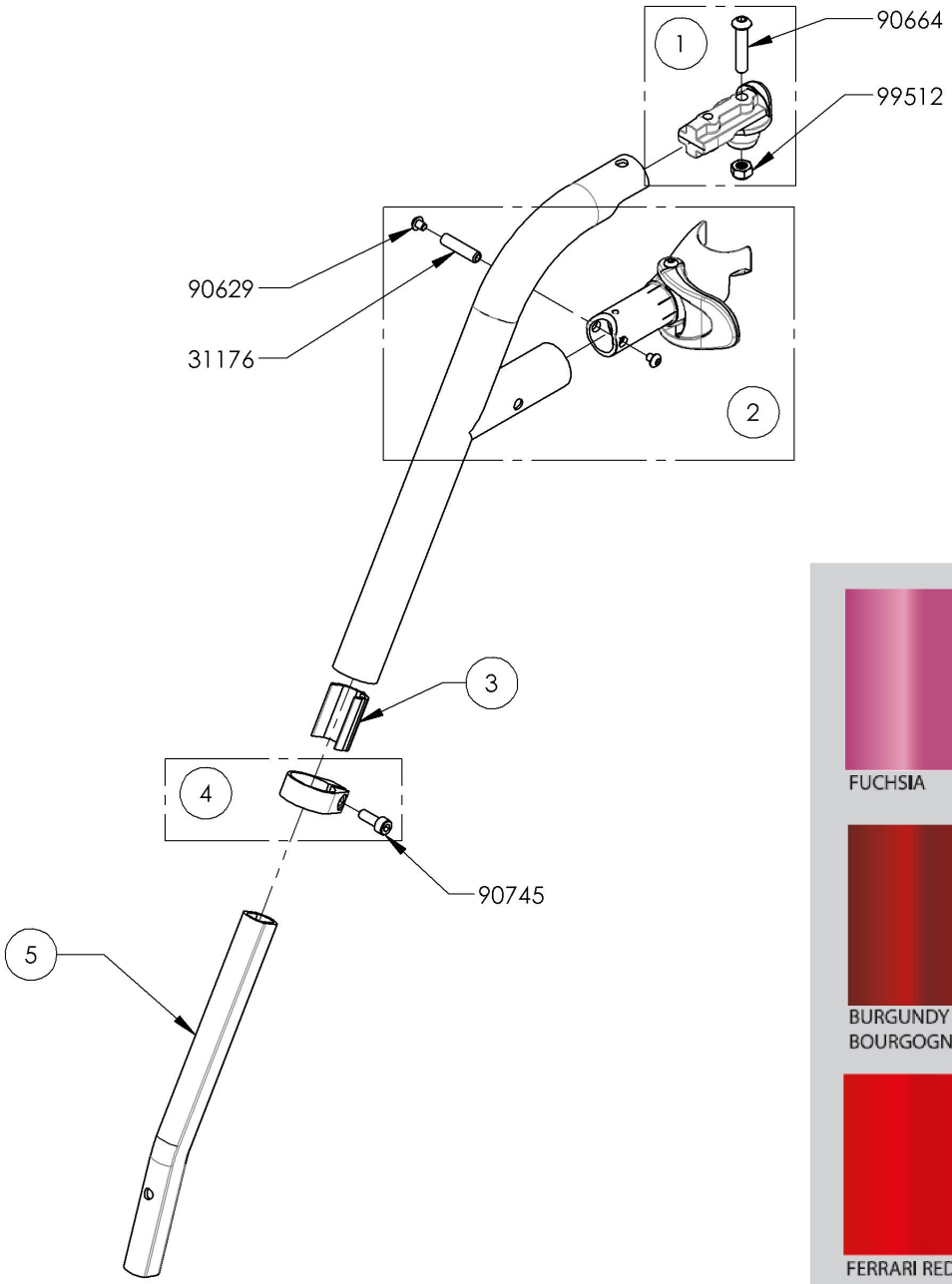

9002953 -
Footrest - Swing-In/Swing-Out, Left, 60°, Short Extension (Specify Color)

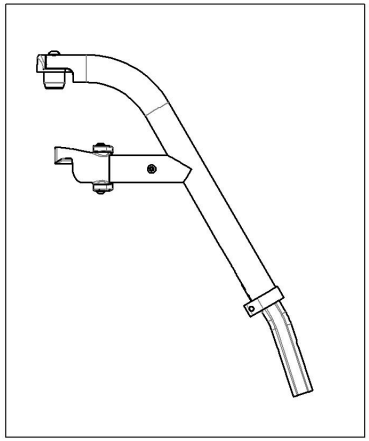

9002954 -
Footrest - Swing-In/Swing-Out, Left, 70°, Short Extension (Specify Color)

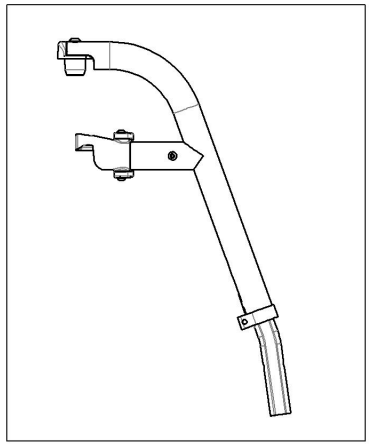

MAKE SURE TO HAVE YOUR SERIAL NUMBER NEARBY WHEN ORDERING PARTS FOR YOUR MOTION COMPOSITES WHEELCHAIR

9001330 & 9003081
Footrest - Swing-In/Swing-Out, Right, 80˚ & 90˚, Short Extension - Black

ITEM NO.	PARTNO	DESCRIPTION	9001330 /QTY.	9003081 /QTY.	REPLACEMENT PARTS/QTY.
1	31547	V2 90 DEG LEGREST, RIGHT - ASSEMBLY	1	-	-
2	31617	V2 80 DEG LEGREST, RIGHT - ASSEMBLY	-	1	-
3	31198	V2 FOOTREST 90° EXTENSION	1	1	-
4	31551	V2 FOOTREST PIVOT - ASSEMBLY	-	-	1
5	31550	V2 FOOTREST HOUSING RIGHT - ASSEMBLY	-	-	1
6	31552	V2 FOOTREST EXTENSION RIGHT CLAMP - ASSEMBLY	-	-	1

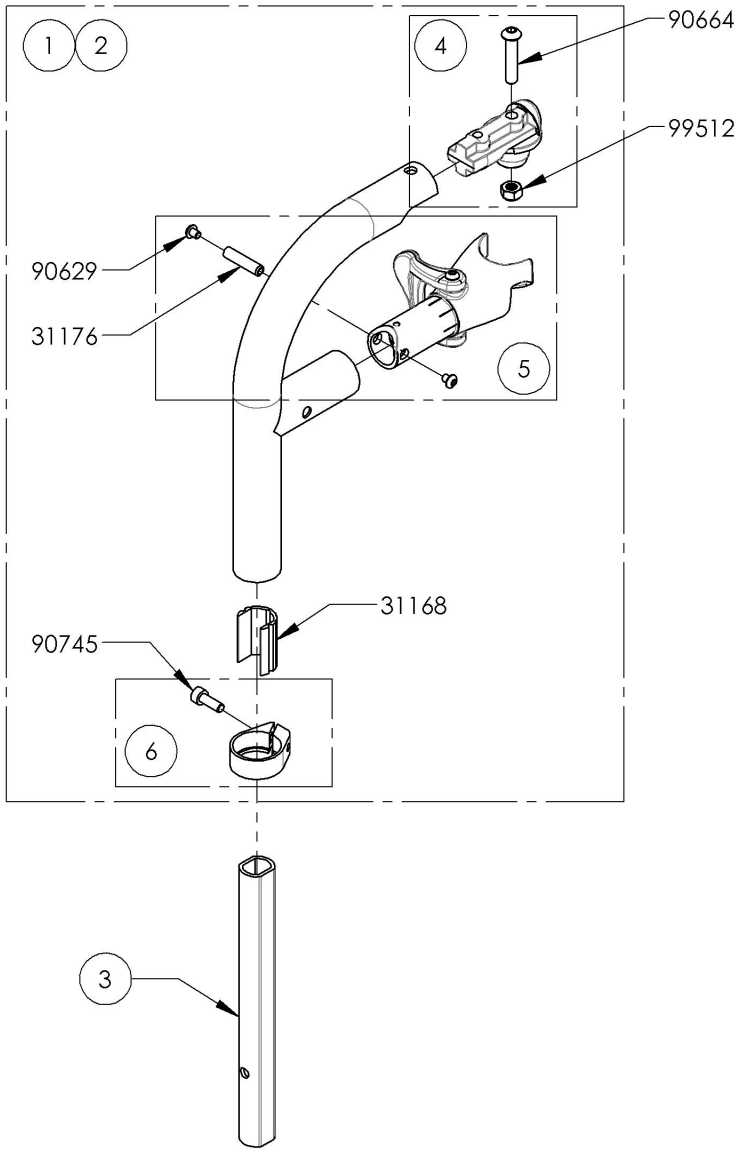

9001330
Footrest - Swing-In/Swing-Out, Right, 90°, Short Extension - Black

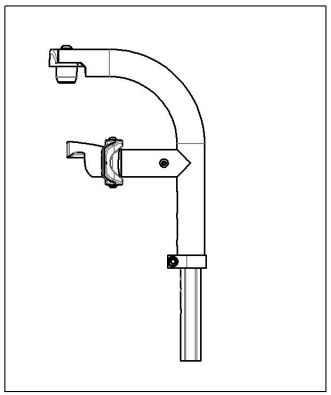

9003081
Footrest - Swing-In/Swing-Out, Right, 80°, Short Extension - Black

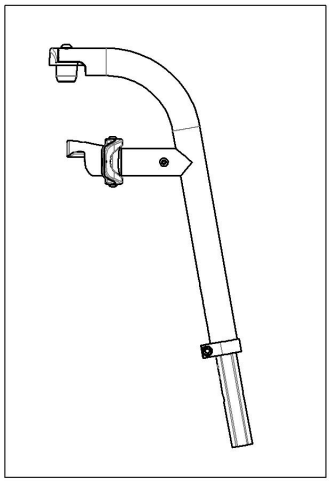

MAKE SURE TO HAVE YOUR SERIAL NUMBER NEARBY WHEN ORDERING PARTS FOR YOUR MOTION COMPOSITES WHEELCHAIR

9001333 & 9003082
Footrest - Swing-In/Swing-Out, Left, 80˚ & 90˚, Short Extension - Black

ITEM NO.	PARTNO	DESCRIPTION	9001333 /QTY.	9003082 /QTY.	REPLACEMENT PARTS/QTY.
1	31548	V2 90 DEG LEGREST, LEFT - ASSEMBLY	1	-	-
2	31618	V2 80 DEG LEGREST, LEFT - ASSEMBLY	-	1	-
3	31198	V2 FOOTREST 90° EXTENSION	1	1	-
4	31551	V2 FOOTREST PIVOT - ASSEMBLY	-	-	1
5	31549	V2 FOOTREST HOUSING LEFT - ASSEMBLY	-	-	1
6	31553	V2 FOOTREST EXTENSION LEFT CLAMP - ASSEMBLY	-	-	1

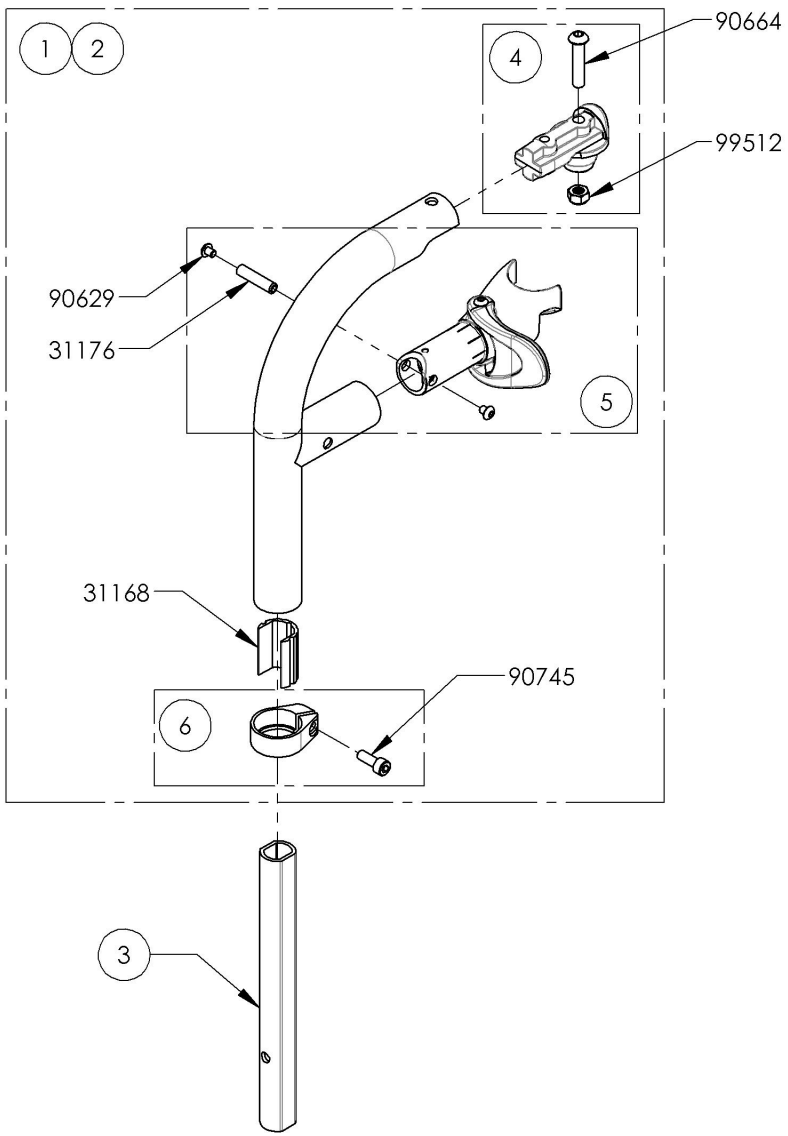

9001333
Footrest - Swing-In/Swing-Out, Left, 90°, Short Extension - Black

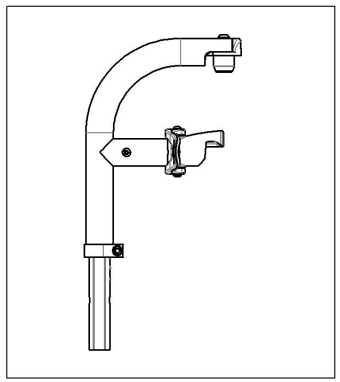

9003082
Footrest - Swing-In/Swing-Out, Left, 80°, Short Extension - Black

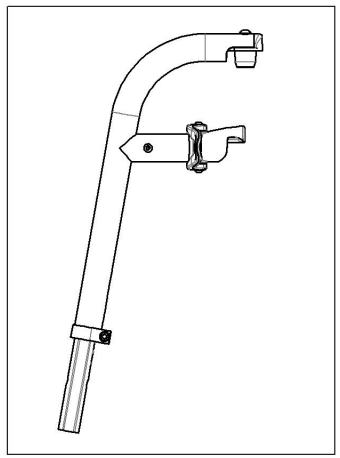

MAKE SURE TO HAVE YOUR SERIAL NUMBER NEARBY WHEN ORDERING PARTS FOR YOUR MOTION COMPOSITES WHEELCHAIR

9001336 & 9003083
Footrest - Swing-In/Swing-Out, Right, 80˚ & 90˚, Short Extension (Specify Color)

ITEM NO.	PARTNO	DESCRIPTION	9001336 /QTY.	9003083 /QTY.
1	31551	V2 FOOTREST PIVOT - ASSEMBLY	1	1
2	31550	V2 FOOTREST HOUSING RIGHT - ASSEMBLY	1	1
3	31168	V2 FOOTREST GUIDE SLEEVE	1	1
4	31552	V2 FOOTREST EXTENSION RIGHT CLAMP - ASSEMBLY	1	1
5	31198	V2 FOOTREST 90° EXTENSION	1	1

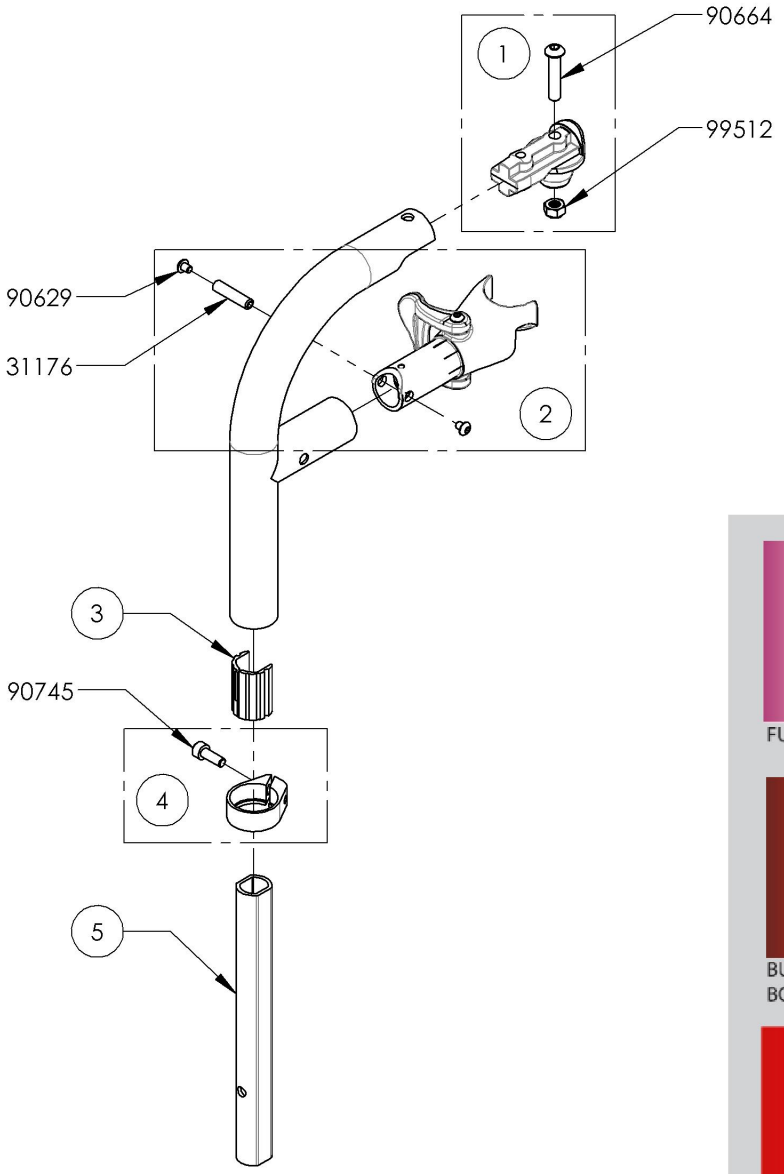

9001336
Footrest - Swing-In/Swing-Out, Right, 90°, Short Extension (Specify Color)

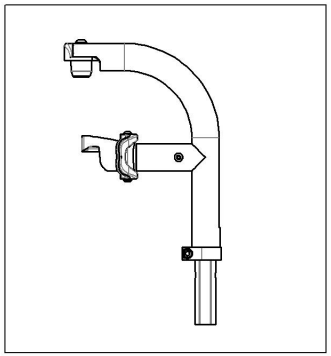

9003083
Footrest - Swing-In/Swing-Out, Right, 80°, Short Extension (Specify Color)

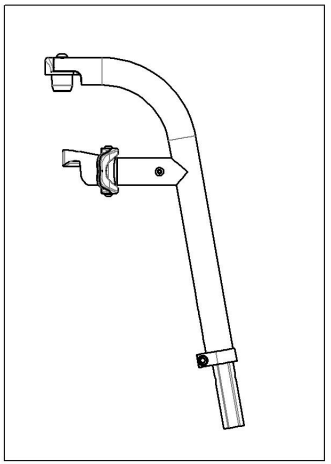

MAKE SURE TO HAVE YOUR SERIAL NUMBER NEARBY WHEN ORDERING PARTS FOR YOUR MOTION COMPOSITES WHEELCHAIR

9001339 & 9003084
Footrest - Swing-In/Swing-Out, Left, 80˚ & 90˚, Short Extension (Specify Color)

ITEM NO.	PARTNO	DESCRIPTION	9001339 /QTY.	9003084 /QTY.
1	31551	V2 FOOTREST PIVOT - ASSEMBLY	1	1
2	31549	V2 FOOTREST HOUSING LEFT - ASSEMBLY	1	1
3	31168	V2 FOOTREST GUIDE SLEEVE	1	1
4	31553	V2 FOOTREST EXTENSION LEFT CLAMP - ASSEMBLY	1	1
5	31198	V2 FOOTREST 90° EXTENSION	1	1

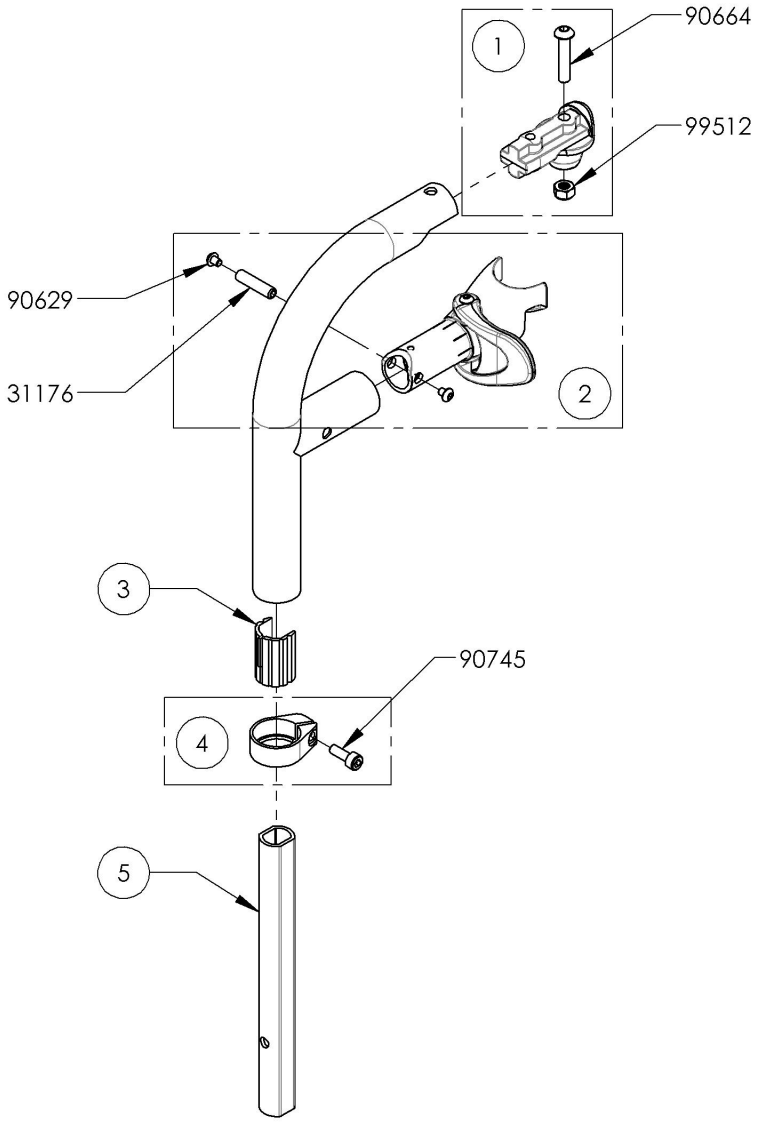

9001339
Footrest - Swing-In/Swing-Out, Left, 90°, Short Extension (Specify Color)

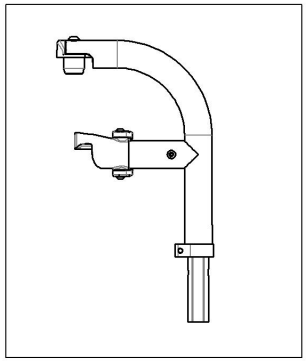

9003084
Footrest - Swing-In/Swing-Out, Left, 80°, Short Extension (Specify Color)

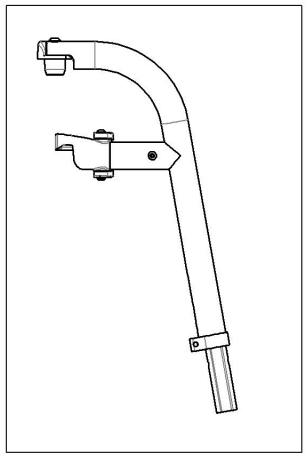

MAKE SURE TO HAVE YOUR SERIAL NUMBER NEARBY WHEN ORDERING PARTS FOR YOUR MOTION COMPOSITES WHEELCHAIR

9001328_9001329
Footrest - Swing-In/Swing-Out, Right, 60˚ & 70˚, Long Extension - Black

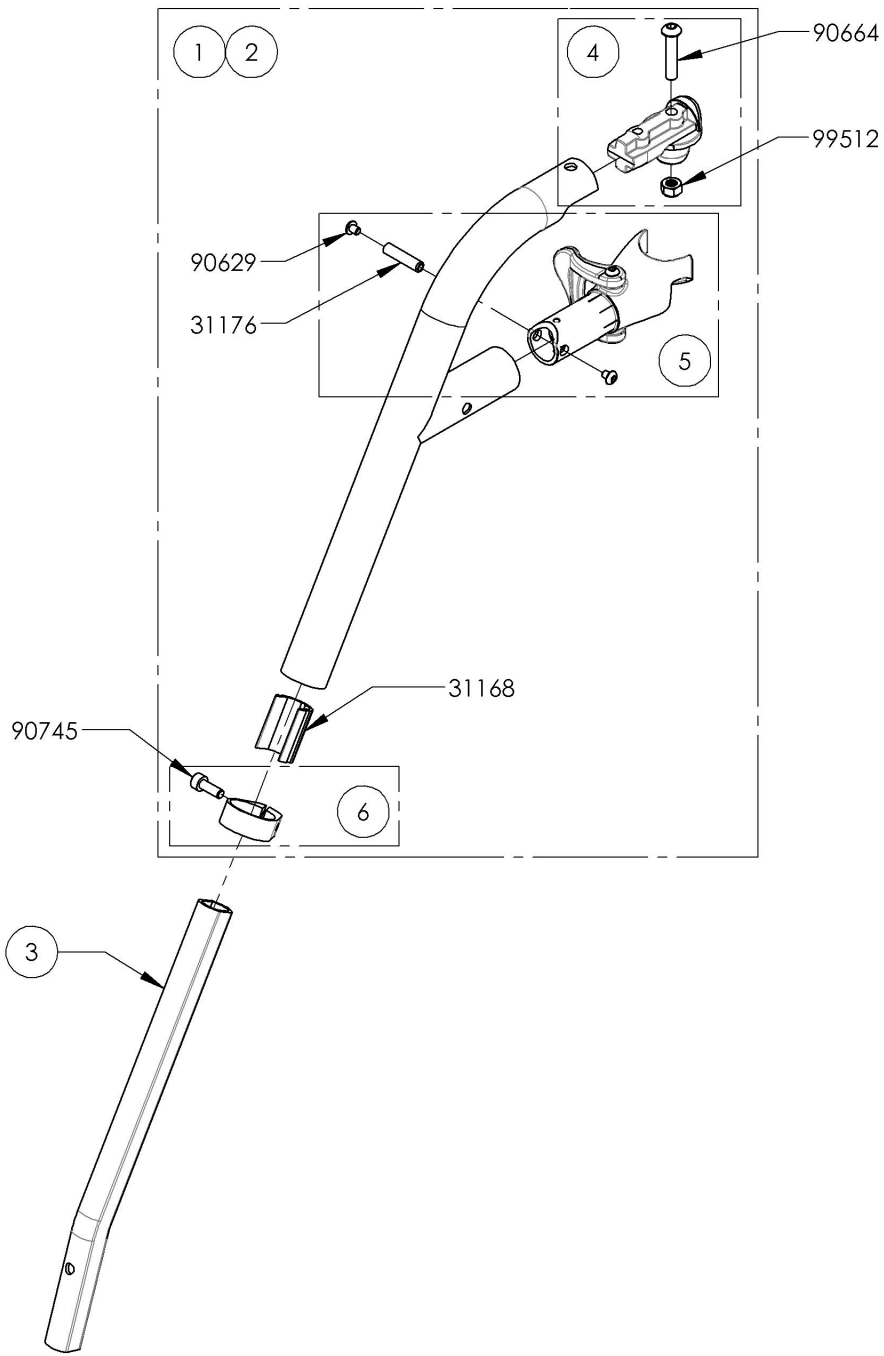

ITEM NO.	PARTNO	DESCRIPTION	9001328 /QTY.	9001329 /QTY.	REPLACEMENT PARTS/QTY.
1	31543	V2 60 DEG LEGREST, RIGHT - ASSEMBLY	1	-	-
2	31545	V2 70 DEG LEGREST, RIGHT - ASSEMBLY	-	1	-
3	31169	V2 FOOTREST EXTENSION	1	1	-
4	31551	V2 FOOTREST PIVOT - ASSEMBLY	-	-	1
5	31550	V2 FOOTREST HOUSING RIGHT - ASSEMBLY	-	-	1
6	31552	V2 FOOTREST EXTENSION RIGHT CLAMP - ASSEMBLY	-	-	1

9001328 -
Footrest - Swing-In/Swing-Out,
Right, 60°, Long Extension - Black

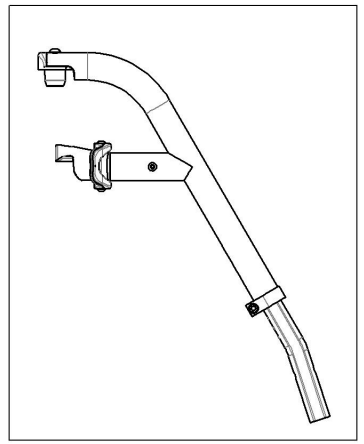

9001329 -
Footrest - Swing-In/Swing-Out,
Right, 70°, Long Extension - Black

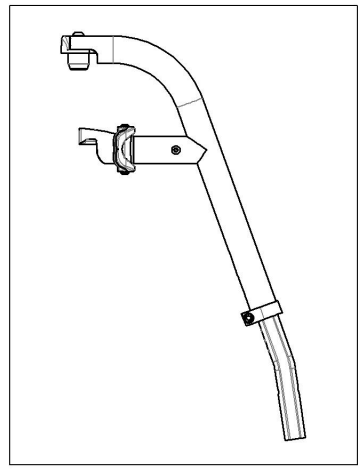

MAKE SURE TO HAVE YOUR SERIAL NUMBER NEARBY WHEN ORDERING PARTS FOR YOUR MOTION COMPOSITES WHEELCHAIR

9001331_9001332
Footrest - Swing-In/Swing-Out, Left, 60˚ & 70˚, Long Extension - Black

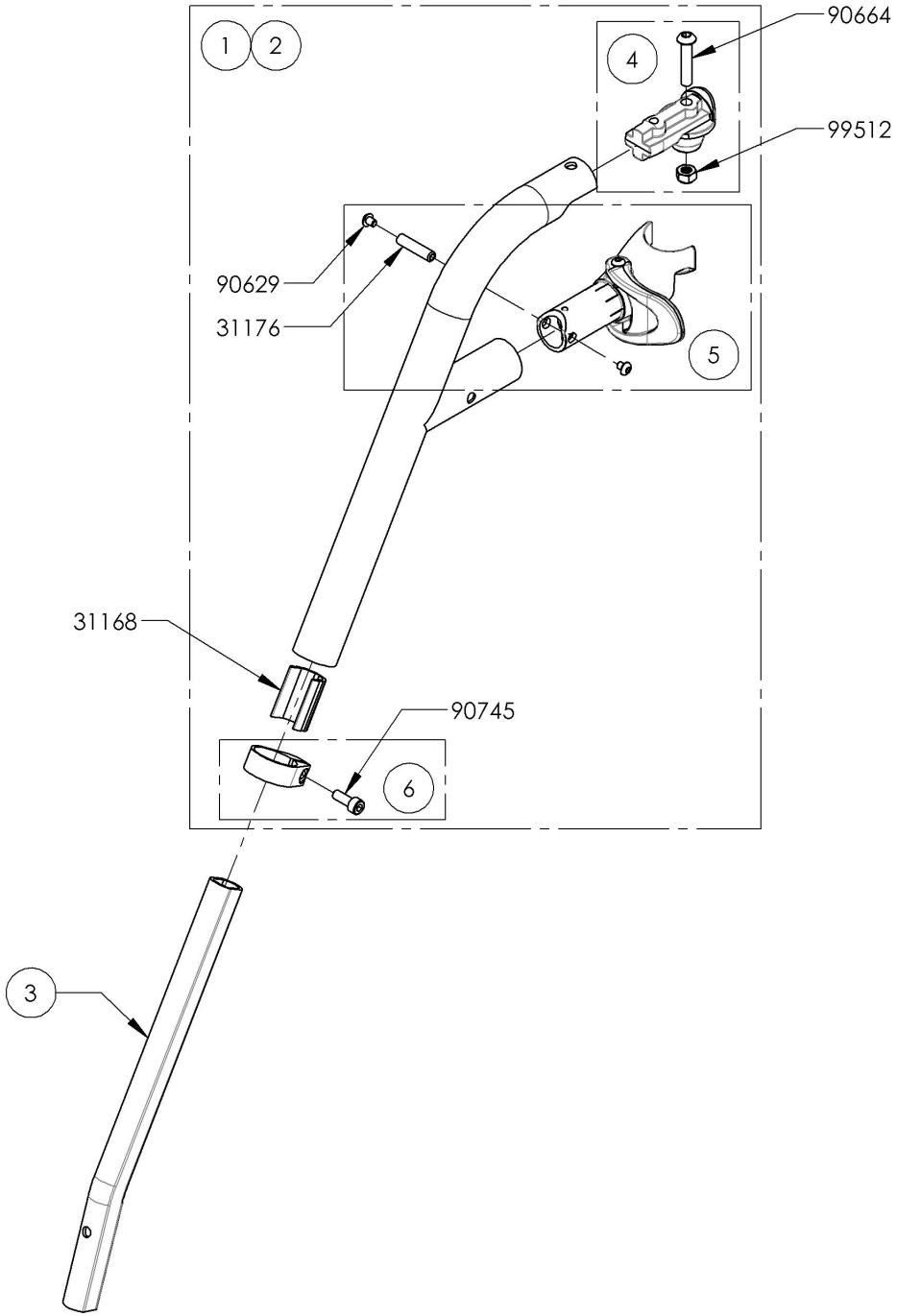

ITEM NO.	PARTNO	DESCRIPTION	9001331 /QTY.	9001332 /QTY.	REPLACEMENT PARTS/QTY.
1	31544	V2 60 DEG LEGREST, LEFT - ASSEMBLY	1	-	-
2	31546	V2 70 DEG LEGREST, LEFT - ASSEMBLY	-	1	-
3	31169	V2 FOOTREST EXTENSION	1	1	-
4	31551	V2 FOOTREST PIVOT - ASSEMBLY	-	-	1
5	31549	V2 FOOTREST HOUSING LEFT - ASSEMBLY	-	-	1
6	31553	V2 FOOTREST EXTENSION LEFT CLAMP - ASSEMBLY	-	-	1

9001331 -
Footrest - Swing-In/Swing-Out,
Left, 60°, Long Extension - Black

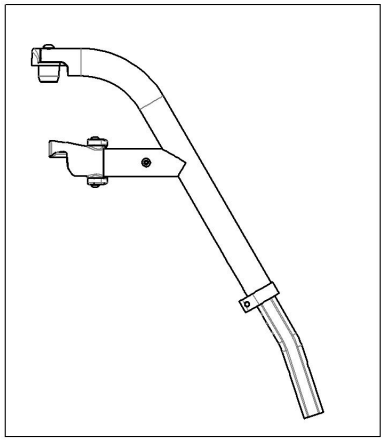

9001332 -
Footrest - Swing-In/Swing-Out,
Left, 70°, Long Extension - Black

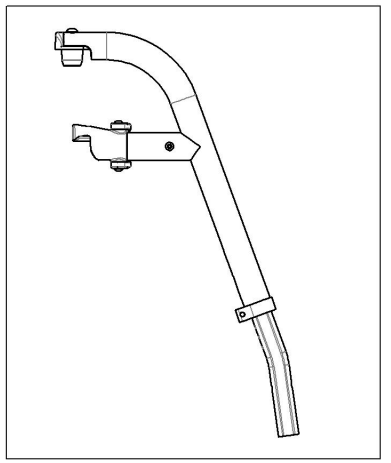

MAKE SURE TO HAVE YOUR SERIAL NUMBER NEARBY WHEN ORDERING PARTS FOR YOUR MOTION COMPOSITES WHEELCHAIR

9001334_9001335
Footrest - Swing-In/Swing-Out, Right, 60˚ & 70˚, Long Extension (Specify Color)

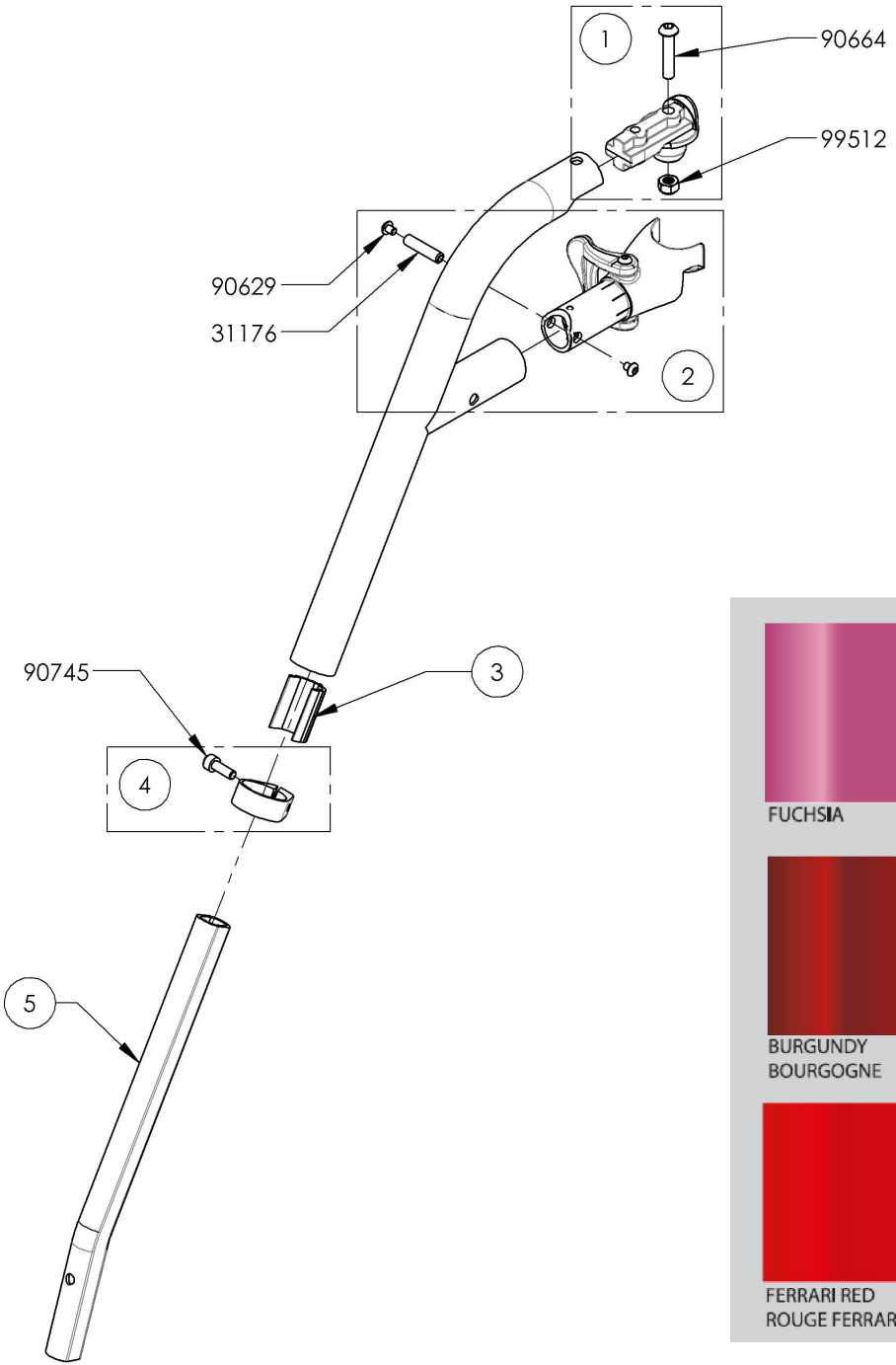

ITEM NO.	PARTNO	DESCRIPTION	9001334 /QTY.	9001335 /QTY.
1	31551	V2 FOOTREST PIVOT - ASSEMBLY	1	1
2	31550	V2 FOOTREST HOUSING RIGHT - ASSEMBLY	1	1
3	31168	V2 FOOTREST GUIDE SLEEVE	1	1
4	31552	V2 FOOTREST EXTENSION RIGHT CLAMP - ASSEMBLY	1	1
5	31169	V2 FOOTREST EXTENSION	1	1

9001334 -
Footrest - Swing-In/Swing-Out, Right, 60°, Long Extension (Specify Color)

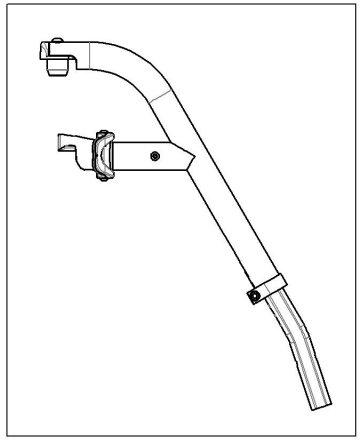

9001335 -
Footrest - Swing-In/Swing-Out, Right, 70°, Long Extension (Specify Color)

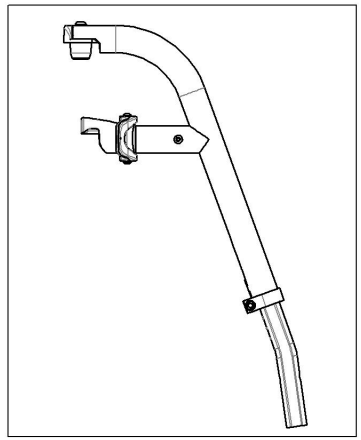

MAKE SURE TO HAVE YOUR SERIAL NUMBER NEARBY WHEN ORDERING PARTS FOR YOUR MOTION COMPOSITES WHEELCHAIR

9001337_9001338
Footrest - Swing-In/Swing-Out, Left, 60˚ & 70˚, Long Extension (Specify Color)

ITEM NO.	PARTNO	DESCRIPTION	9001337 /QTY.	9001338 /QTY.
1	31551	V2 FOOTREST PIVOT - ASSEMBLY	1	1
2	31549	V2 FOOTREST HOUSING LEFT - ASSEMBLY	1	1
3	31168	V2 FOOTREST GUIDE SLEEVE	1	1
4	31553	V2 FOOTREST EXTENSION LEFT CLAMP - ASSEMBLY	1	1
5	31169	V2 FOOTREST EXTENSION	1	1

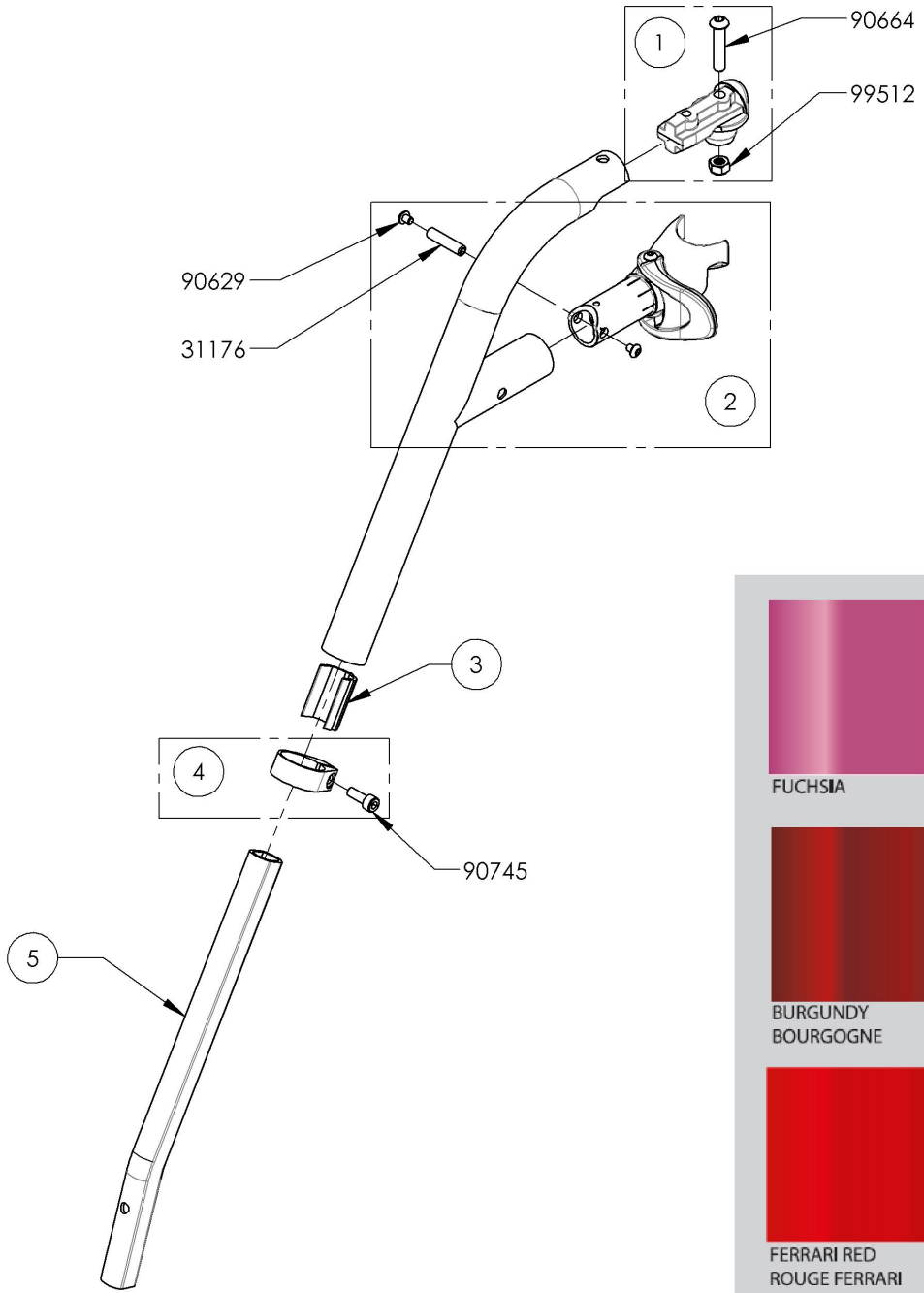

9001337 -
Footrest - Swing-In/Swing-Out, Left, 60°, Long Extension (Specify Color)

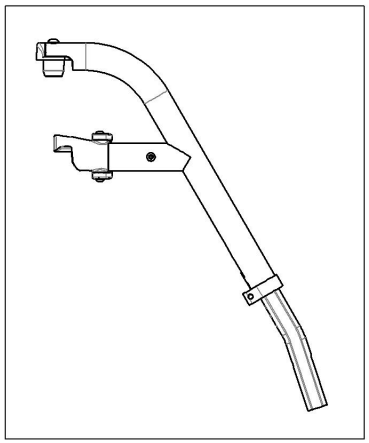

9001338 -
Footrest - Swing-In/Swing-Out, Left, 70°, Long Extension (Specify Color)

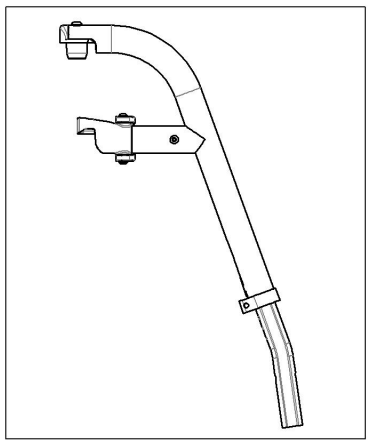

MAKE SURE TO HAVE YOUR SERIAL NUMBER NEARBY WHEN ORDERING PARTS FOR YOUR MOTION COMPOSITES WHEELCHAIR

9002916 & 9003085
Footrest - Swing-In/Swing-Out, Right, 80˚ & 90˚, Long Extension - Black

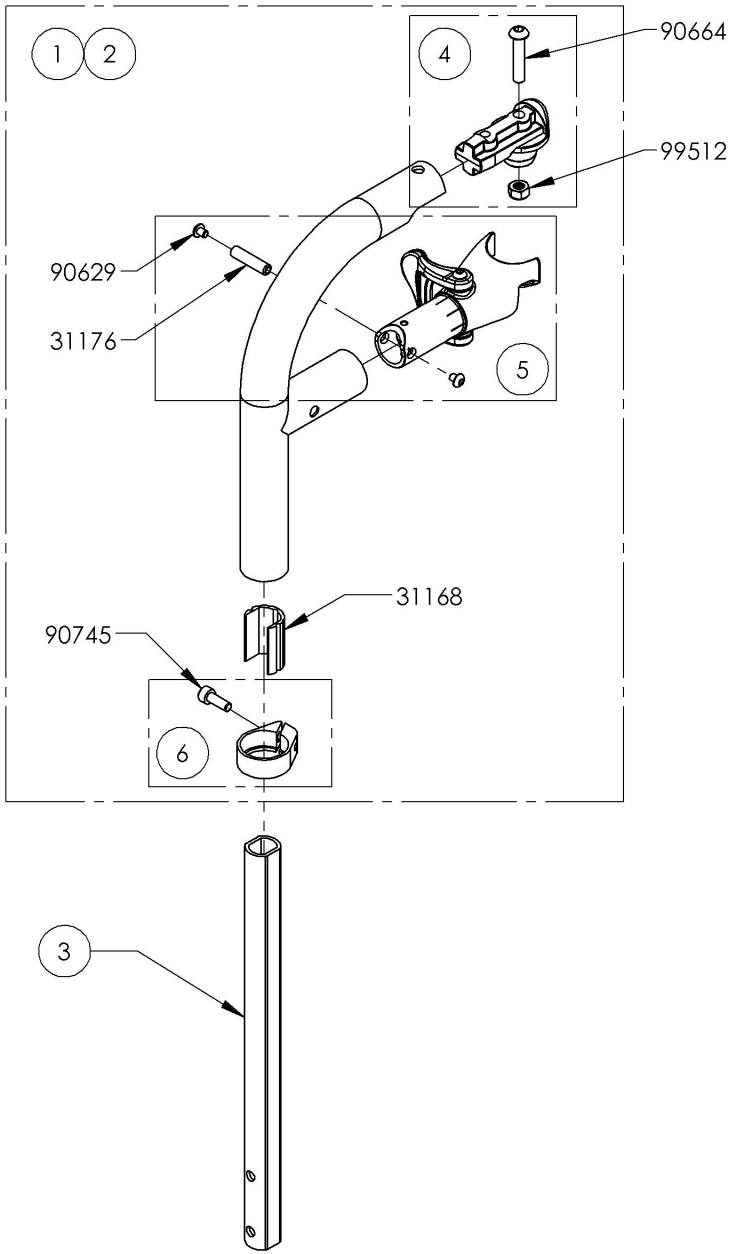

ITEM NO.	PARTNO	DESCRIPTION	9002916 /QTY.	9003085 /QTY.	REPLACEMENT PARTS/QTY.
1	31547	V2 90 DEG LEGREST, RIGHT - ASSEMBLY	1	-	-
2	31617	V2 80 DEG LEGREST, RIGHT - ASSEMBLY	-	1	-
3	31209	V2 FOOTREST 90° LONG EXTENSION	1	1	-
4	31551	V2 FOOTREST PIVOT - ASSEMBLY	-	-	1
5	31550	V2 FOOTREST HOUSING RIGHT - ASSEMBLY	-	-	1
6	31552	V2 FOOTREST EXTENSION RIGHT CLAMP - ASSEMBLY	-	-	1

9002916 -
Footrest - Swing-In/Swing-Out,
Right, 90°, Long Extension - Black

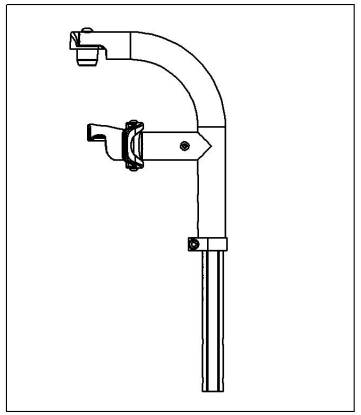

9003085 -
Footrest - Swing-In/Swing-Out,
Right, 80°, Long Extension - Black

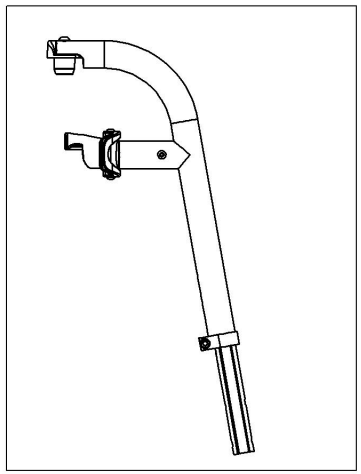

MAKE SURE TO HAVE YOUR SERIAL NUMBER NEARBY WHEN ORDERING PARTS FOR YOUR MOTION COMPOSITES WHEELCHAIR

9002917 & 9003086
Footrest - Swing-In/Swing-Out, Left, 80˚ & 90˚, Long Extension - Black

ITEM NO.	PARTNO	DESCRIPTION	9002917 /QTY.	9003086 /QTY.	REPLACEMENT PARTS/QTY.
1	31548	V2 90 DEG LEGREST, LEFT - ASSEMBLY	1	-	-
2	31618	V2 80 DEG LEGREST, LEFT - ASSEMBLY	-	1	-
3	31209	V2 FOOTREST 90° LONG EXTENSION	1	1	-
4	31551	V2 FOOTREST PIVOT - ASSEMBLY	-	-	1
5	31549	V2 FOOTREST HOUSING LEFT - ASSEMBLY	-	-	1
6	31553	V2 FOOTREST EXTENSION LEFT CLAMP - ASSEMBLY	-	-	1

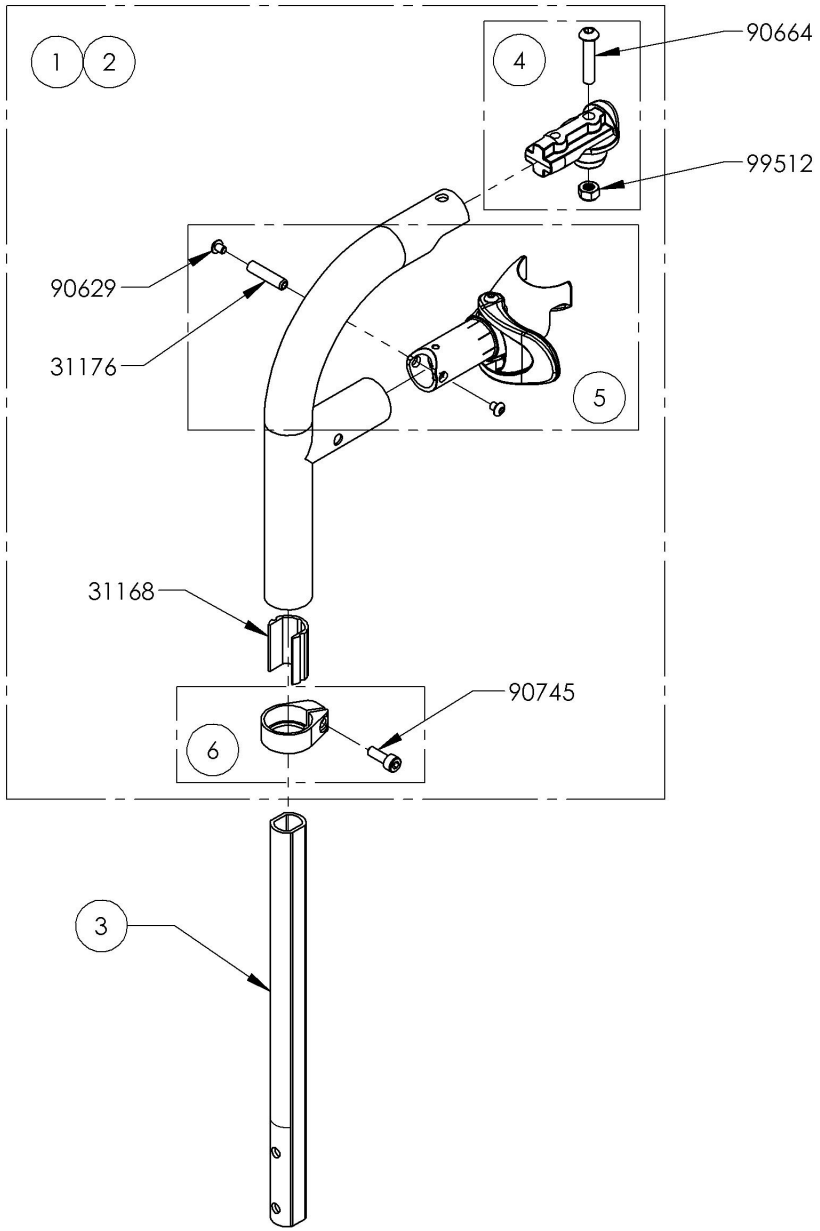

9002917
Footrest - Swing-In/Swing-Out, Left, 90°, Long Extension - Black

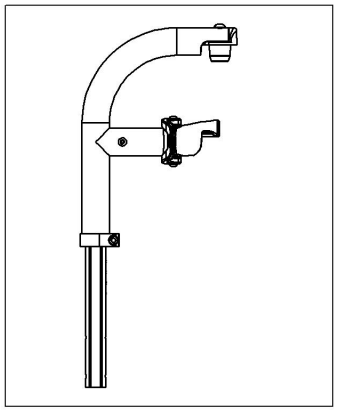

9003086
Footrest - Swing-In/Swing-Out, Left, 80°, Long Extension - Black

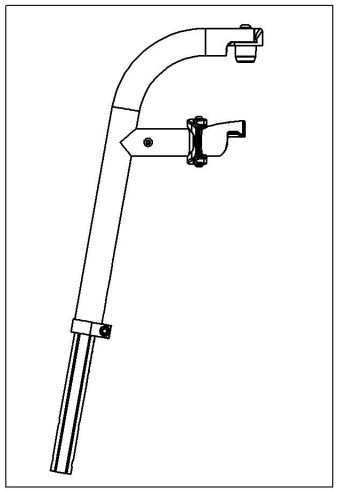

MAKE SURE TO HAVE YOUR SERIAL NUMBER NEARBY WHEN ORDERING PARTS FOR YOUR MOTION COMPOSITES WHEELCHAIR

9002955 & 9003087
Footrest - Swing-In/Swing-Out, Right, 80˚ & 90˚, Long Extension (Specify Color)

ITEM NO.	PARTNO	DESCRIPTION	9002955 /QTY.	9003087 /QTY.
1	31551	V2 FOOTREST PIVOT - ASSEMBLY	1	1
2	31550	V2 FOOTREST HOUSING RIGHT - ASSEMBLY	1	1
3	31168	V2 FOOTREST GUIDE SLEEVE	1	1
4	31552	V2 FOOTREST EXTENSION RIGHT CLAMP - ASSEMBLY	1	1
5	31209	V2 FOOTREST 90° LONG EXTENSION	1	1

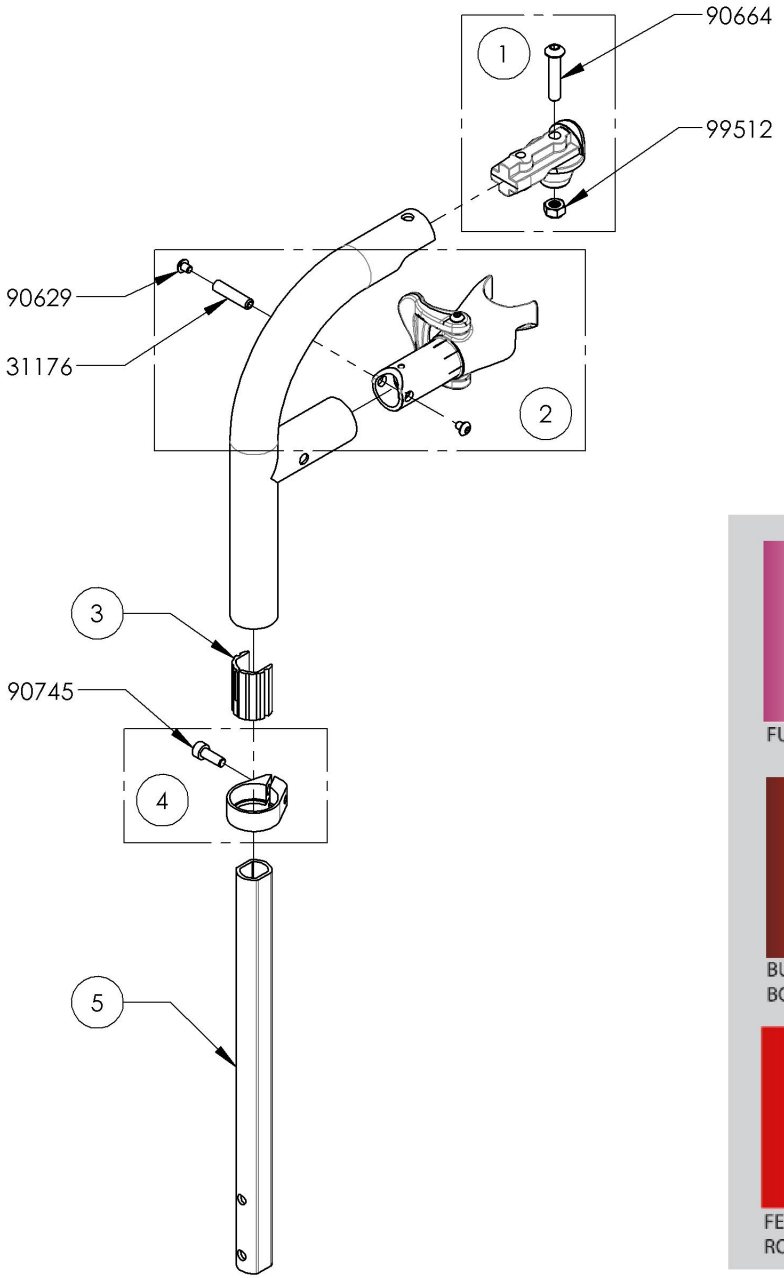

9002955
Footrest - Swing-In/Swing-Out, Right, 90°, Long Extension (Specify Color)

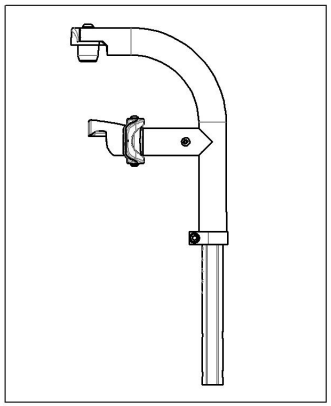

9003087
Footrest - Swing-In/Swing-Out, Right, 80°, Long Extension (Specify Color)

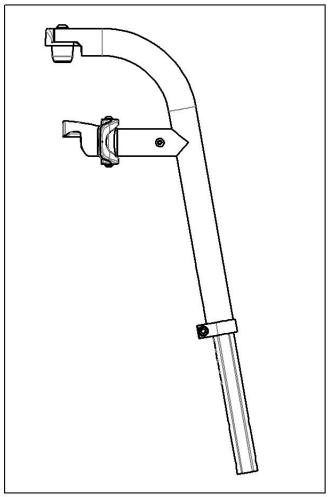

MAKE SURE TO HAVE YOUR SERIAL NUMBER NEARBY WHEN ORDERING PARTS FOR YOUR MOTION COMPOSITES WHEELCHAIR

9002952 & 9003088
Footrest - Swing-In/Swing-Out, Left, 80˚ & 90˚, Long Extension (Specify Color)

ITEM NO.	PARTNO	DESCRIPTION	9002952 /QTY.	9003088 /QTY.
1	31551	V2 FOOTREST PIVOT - ASSEMBLY	1	1
2	31549	V2 FOOTREST HOUSING LEFT - ASSEMBLY	1	1
3	31168	V2 FOOTREST GUIDE SLEEVE	1	1
4	31553	V2 FOOTREST EXTENSION LEFT CLAMP - ASSEMBLY	1	1
5	31209	V2 FOOTREST 90° LONG EXTENSION	1	1

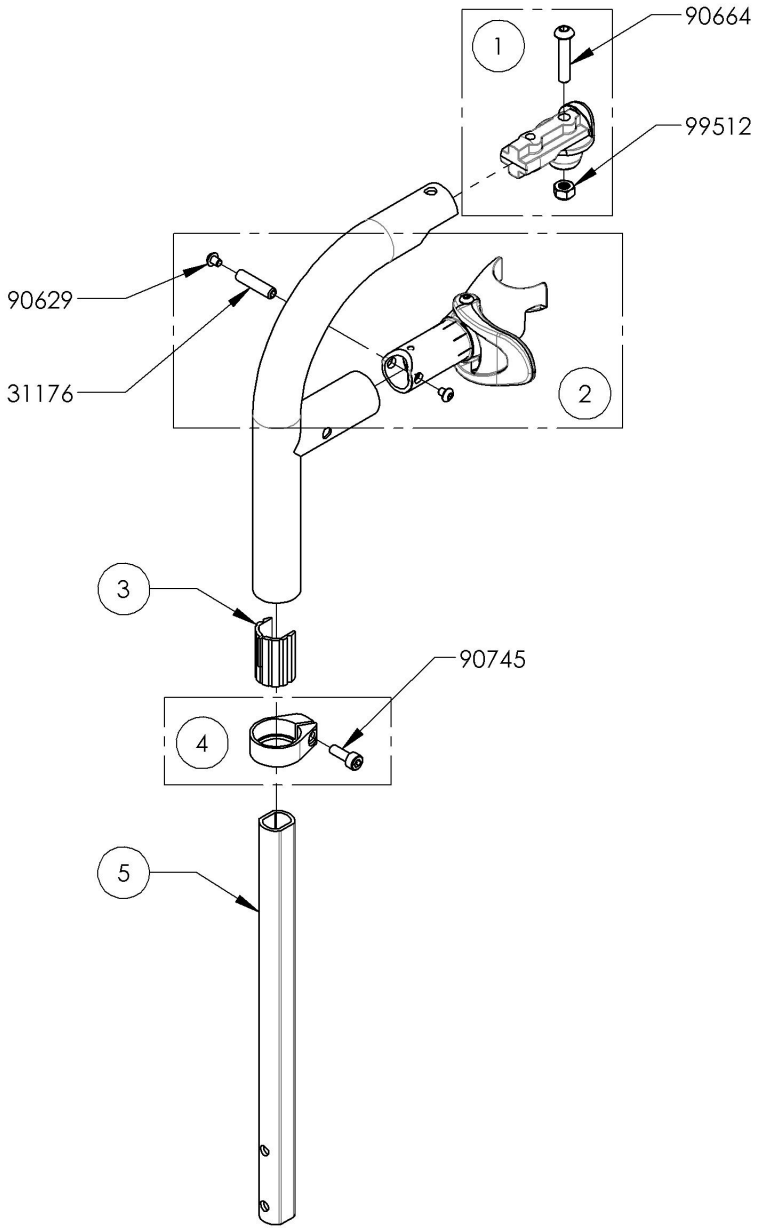

9002952
Footrest - Swing-In/Swing-Out, Left, 90°, Long Extension (Specify Color)

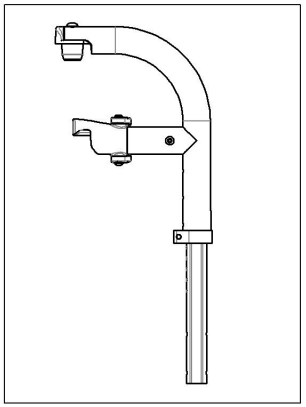

9003088
Footrest - Swing-In/Swing-Out, Left, 80°, Long Extension (Specify Color)

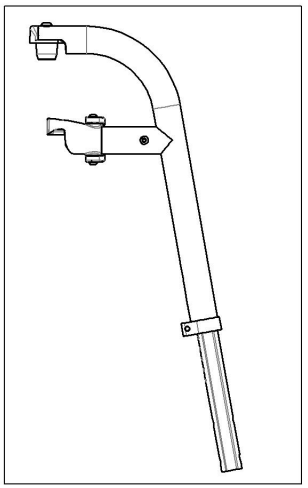

MAKE SURE TO HAVE YOUR SERIAL NUMBER NEARBY WHEN ORDERING PARTS FOR YOUR MOTION COMPOSITES WHEELCHAIR

Footrests Catalogue
Calf Straps

ITEM NO.	PARTNO	DESCRIPTION	QTY.
1	9001068	Calf Strap - Non Padded (Wheelchair Width: 12 to 14 in)	1
2	9001412	Calf Strap - Non Padded (Wheelchair Width: 15 to 17 in)	1
3	9001413	Calf Strap - Non Padded (Wheelchair Width: 18 to 22 in)	1
4	9001580	Calf Strap - Double, Non-Padded (Wheelchair Width: 12 to 14 in)	1
5	9002140	Calf Strap - Double, Non-Padded (Wheelchair Width: 15 to 17 in)	1
6	9002141	Calf Strap - Double, Non-Padded (Wheelchair Width: 18 to 22 in)	1
7	9001414	Calf Strap - Padded (Wheelchair Width: 15 to 17 in)	1
8	9001415	Calf Strap - Padded (Wheelchair Width: 18 to 22 in)	1

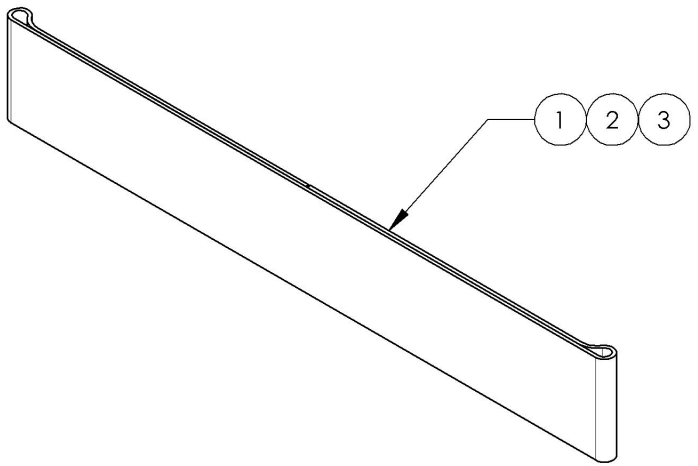

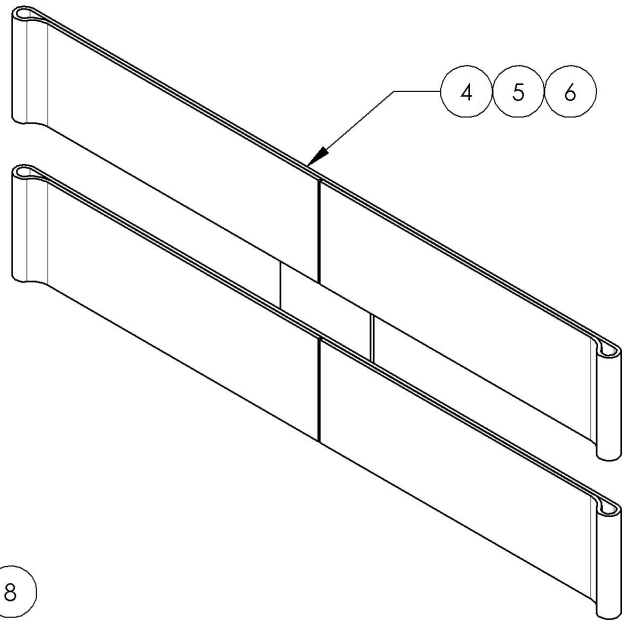

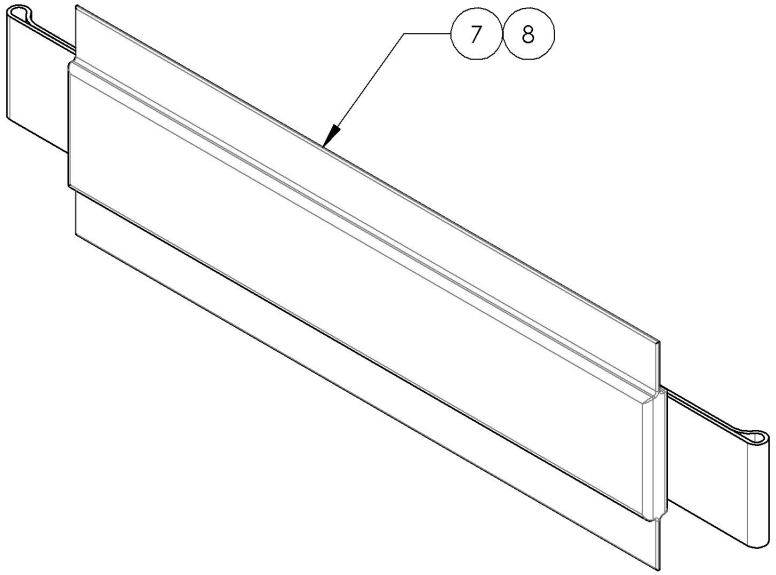

MAKE SURE TO HAVE YOUR SERIAL NUMBER NEARBY WHEN ORDERING PARTS FOR YOUR MOTION COMPOSITES WHEELCHAIR

9001068 & 9001412_9001413
Calf Straps - Non Padded

ITEM NO.	PARTNO	DESCRIPTION	9001068 /QTY.	9001412 /QTY.	9001413 /QTY.
1	31159	SIMPLE CALF STRAP 12-14 in	1	-	-
2	31046	SIMPLE CALF STRAP 15-17 in	-	1	-
3	31047	SIMPLE CALF STRAP 18-22 in	-	-	1

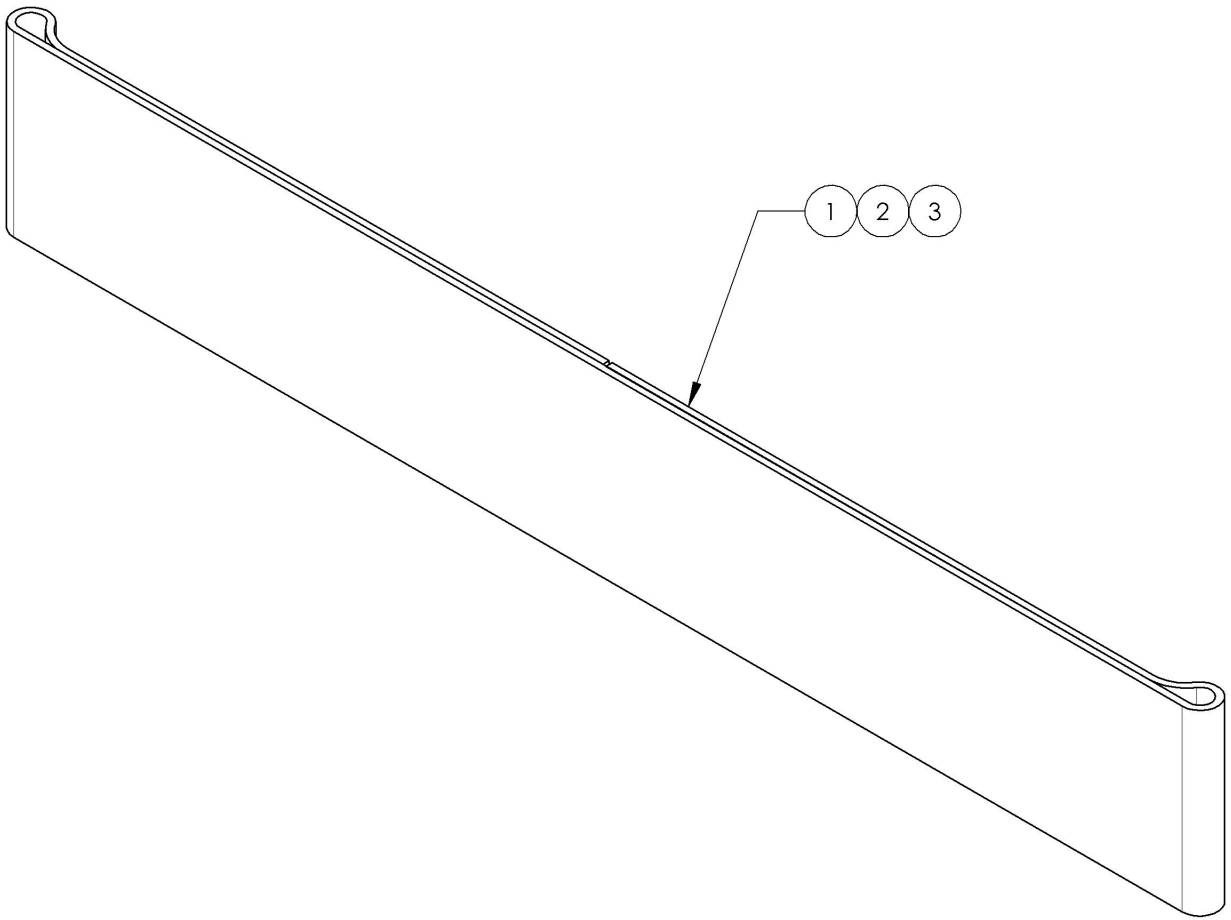

9001068
Calf Strap - Non Padded
(Wheelchair Width: 12 to 14 in)

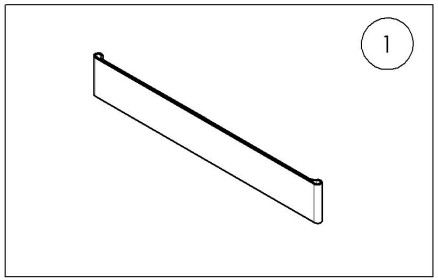

9001412
Calf Strap - Non Padded
(Wheelchair Width: 15 to 17 in)

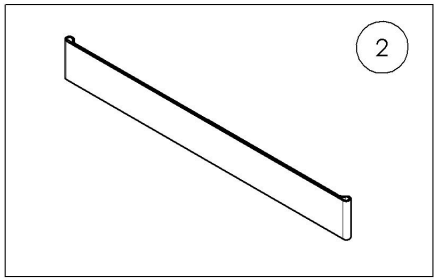

9001413
Calf Strap - Non Padded
(Wheelchair Width: 18 to 22 in)

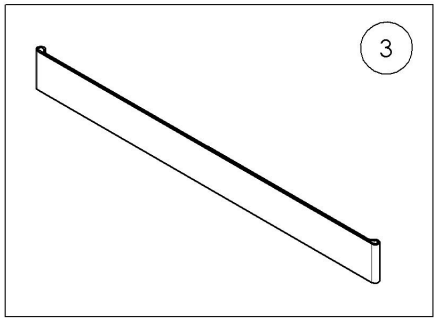

MAKE SURE TO HAVE YOUR SERIAL NUMBER NEARBY WHEN ORDERING PARTS FOR YOUR MOTION COMPOSITES WHEELCHAIR

9001580 & 9002140_9002141
Calf Strap - Double, Non-Padded

ITEM NO.	PARTNO	DESCRIPTION	9001580 /QTY.	9002140 /QTY.	9002141 /QTY.
1	31293	DOUBLE CALF STRAP 12-14 in	1	-	-
2	31281	DOUBLE CALF STRAP 15-17 in	-	1	-
3	31282	DOUBLE CALF STRAP 18-22 in	-	-	1

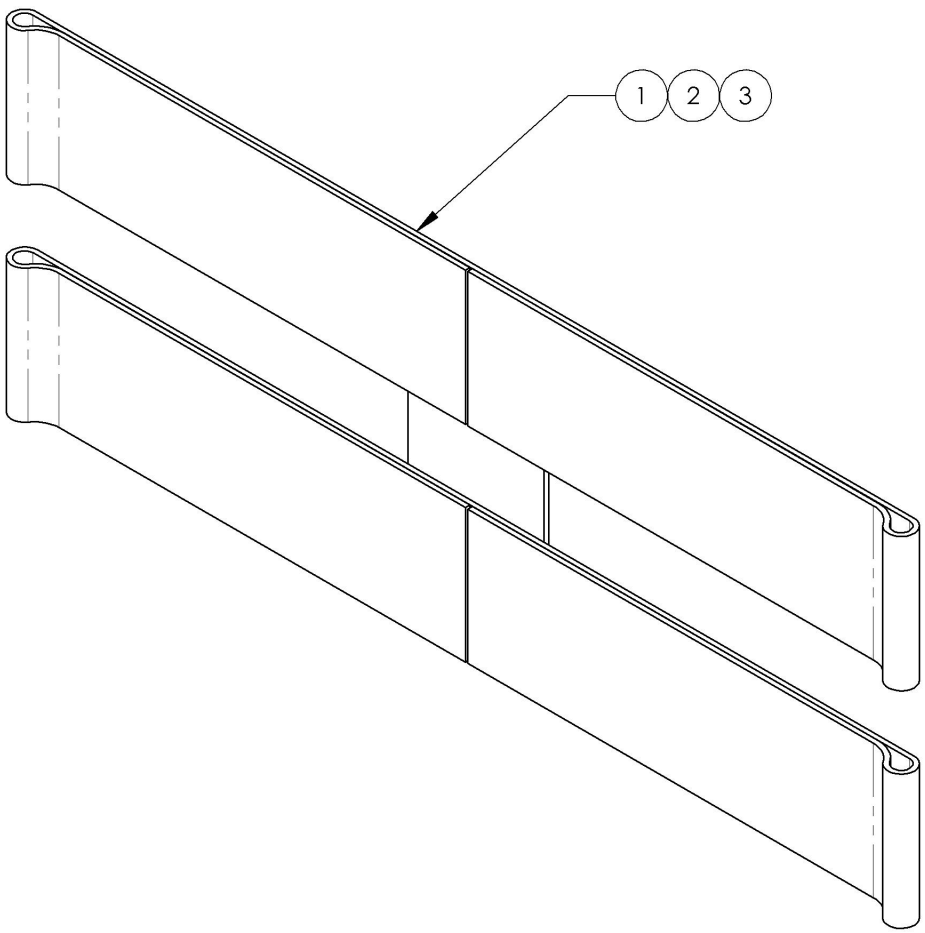

9001580
Calf Strap - Double, Non-Padded
(Wheelchair Width: 12 to 14 in)

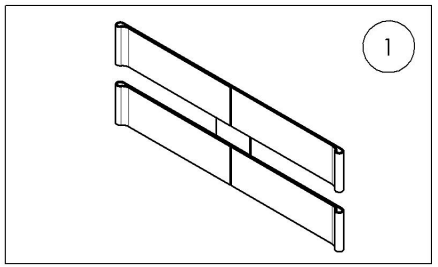

9002140
Calf Strap - Double, Non-Padded
(Wheelchair Width: 15 to 17 in)

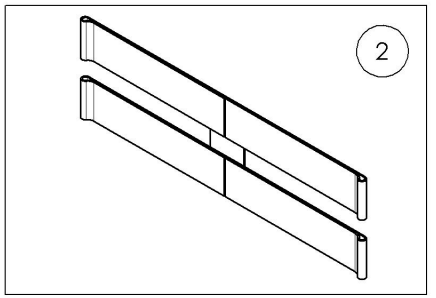

9002141
Calf Strap - Double, Non-Padded
(Wheelchair Width: 18 to 22 in)

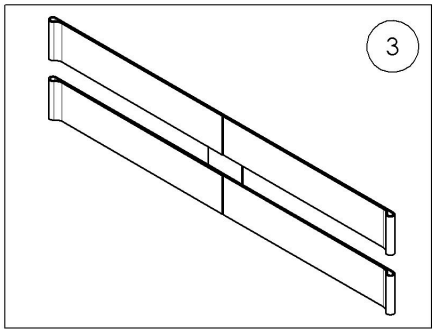

MAKE SURE TO HAVE YOUR SERIAL NUMBER NEARBY WHEN ORDERING PARTS FOR YOUR MOTION COMPOSITES WHEELCHAIR

9001414_9001415
Calf Straps - Padded

ITEM NO.	PARTNO	DESCRIPTION	9001414 /QTY.	9001415 /QTY.
1	31061	PADDED CALF PAD	1	1
2	31046	SIMPLE CALF STRAP 15-17 in	1	-
3	31047	SIMPLE CALF STRAP 18-22 in	-	1

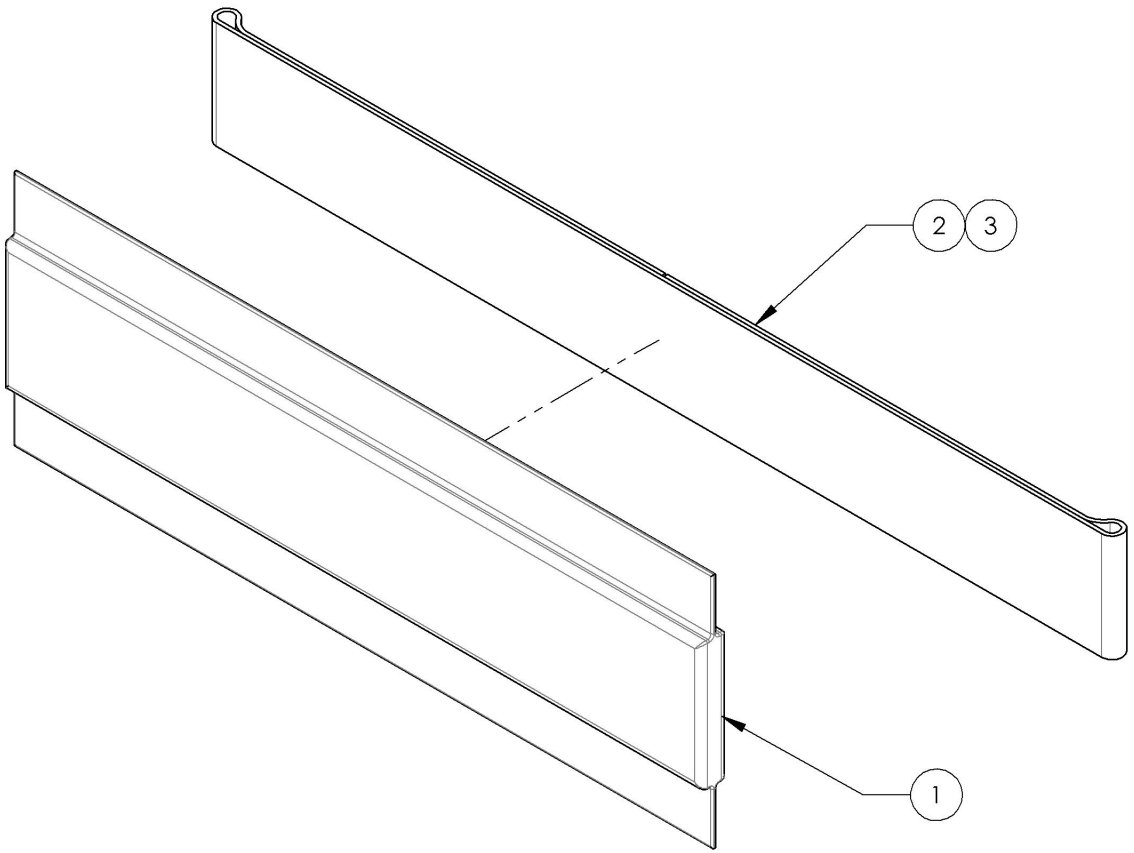

9001414
Calf Strap - Padded
(Wheelchair Width: 15 to 17 in)

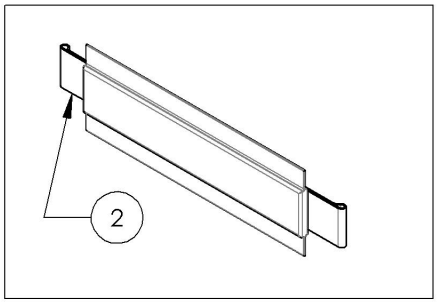

9001415
Calf Strap - Padded
(Wheelchair Width: 18 to 22 in)

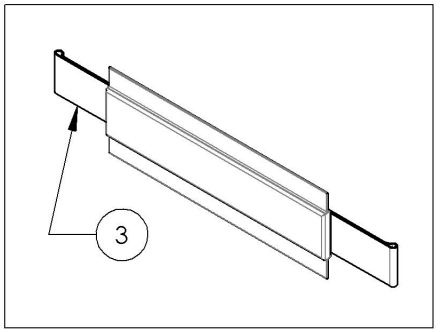

MAKE SURE TO HAVE YOUR SERIAL NUMBER NEARBY WHEN ORDERING PARTS FOR YOUR MOTION COMPOSITES WHEELCHAIR

Footrests Catalogue
Bodypoint Aeromesh Calf Supports

ITEM NO.	PARTNO	DESCRIPTION	QTY
1	9007795	Calf Strap - Bodypoint Aeromesh, Small (Width: 12 to 16 in) (30.4 to 40.6 cm)	1
2	9007796	Calf Strap - Bodypoint Aeromesh, Medium (Width: 17 to 20 in) (43.2 to 50.8 cm)	1
3	9007797	Calf Strap - Bodypoint Aeromesh, Large (Width: 21 to 24 in) (53.3 to 61 cm)	1
4	9007798	Calf Panel - Bodypoint Aeromesh, Small (Width: 12 to 16 in) (30.4 to 40.6 cm)	1
5	9007799	Calf Panel - Bodypoint Aeromesh, Medium (Width: 17 to 20 in) (43.2 to 50.8 cm)	1
6	9007800	Calf Panel - Bodypoint Aeromesh, Large (Width: 21 to 24 in) (53.3 to 61 cm)	1

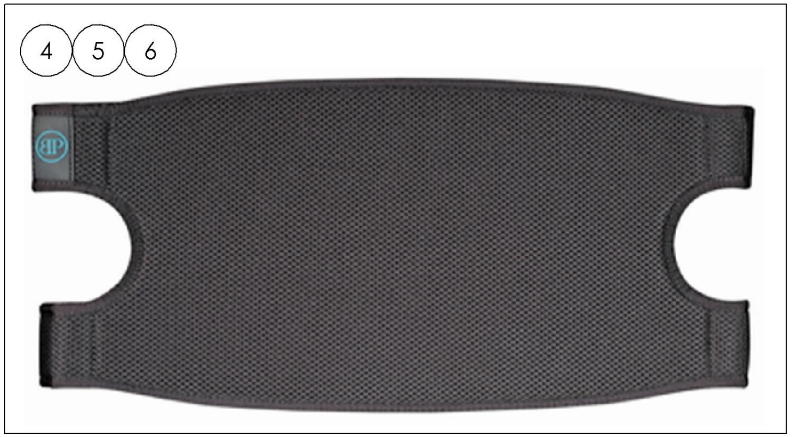

MAKE SURE TO HAVE YOUR SERIAL NUMBER NEARBY WHEN ORDERING PARTS FOR YOUR MOTION COMPOSITES WHEELCHAIR

Footrests Catalogue
Elevating Legrests - Swing-In/Swing-Out

ITEM NO.	PARTNO	DESCRIPTION	QTY.
1	9001354	Elevating Legrest + Calf Pad - Swing-In/Swing-Out, Right (Wheelchair Width: 14 to 16 in)	1
2	9001356	Elevating Legrest + Calf Pad - Swing-In/Swing-Out, Left (Wheelchair Width: 14 to 16 in)	1
3	9001355	Elevating Legrest + Calf Pad - Swing-In/Swing-Out, Right (Wheelchair Width: 17 to 22 in)	1
4	9001357	Elevating Legrest + Calf Pad - Swing-In/Swing-Out, Left (Wheelchair Width: 17 to 22 in)	1

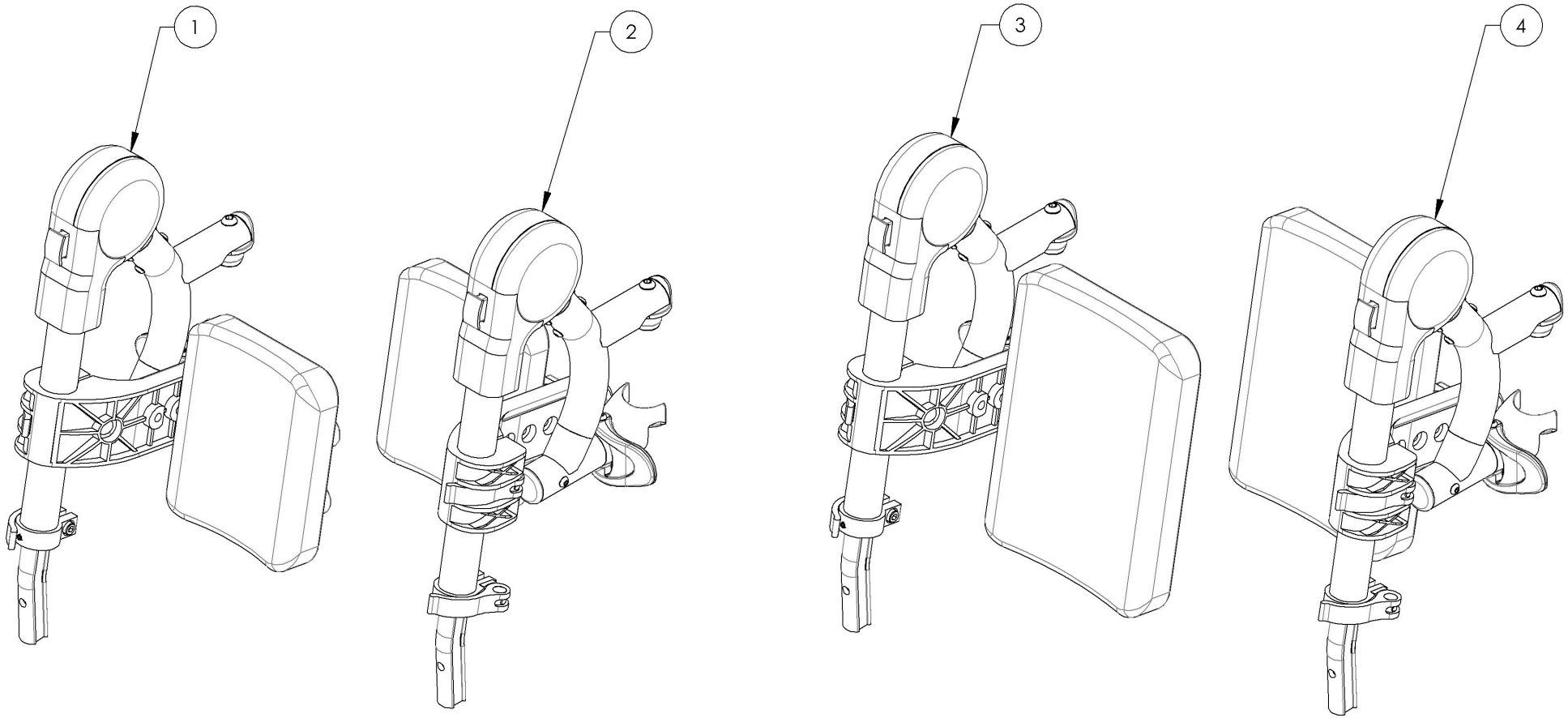

MAKE SURE TO HAVE YOUR SERIAL NUMBER NEARBY WHEN ORDERING PARTS FOR YOUR MOTION COMPOSITES WHEELCHAIR

9001354_9001355
Elevating Legrest + Calf Pad - Swing-In/Swing-Out, Right

ITEM NO.	PARTNO	DESCRIPTION	9001354 /QTY.	9001355 /QTY.	REPLACEMENT PARTS/QTY.
1	31564	V2 ELEVATING LEGREST RIGHT	1	1	-
2	31140	14-16" RIGHT ELEVATING LEGREST CALF PAD	1	-	-
3	31142	17-22" RIGHT ELEVATING LEGREST CALF PAD	-	1	-
4	31551	V2 FOOTREST PIVOT - ASSEMBLY	-	-	1
5	31550	V2 FOOTREST HOUSING RIGHT - ASSEMBLY	-	-	1
6	31158	ELEVATING LEGREST CALF PAD SUPPORT	-	-	1

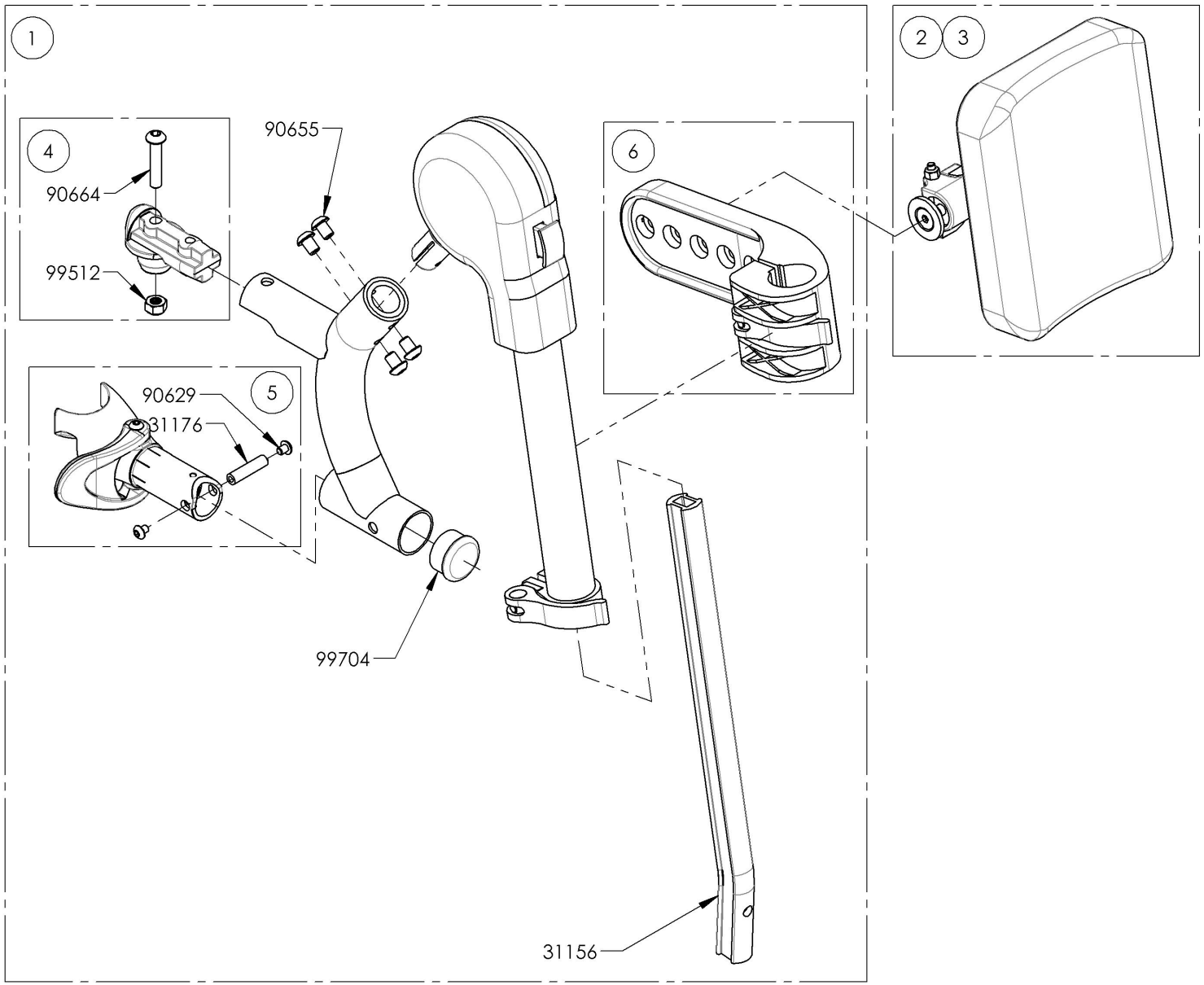

9001354
Elevating Legrest + Calf Pad - Swing-In/Swing-Out, Right
(Wheelchair Width: 14 to 16 in)

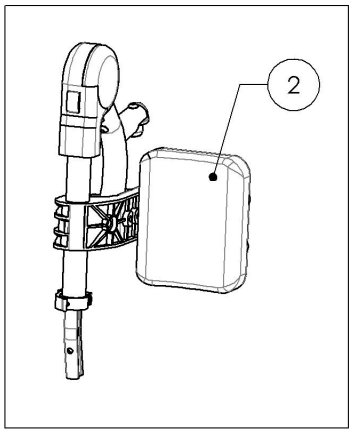

9001355
Elevating Legrest + Calf Pad - Swing-In/Swing-Out, Right
(Wheelchair Width: 17 to 22 in)

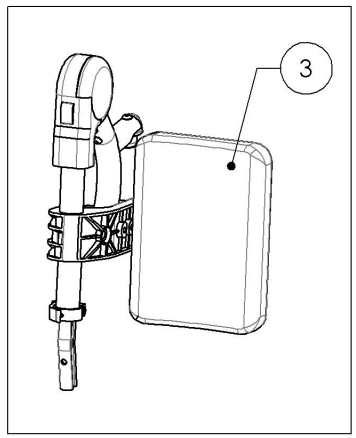

MAKE SURE TO HAVE YOUR SERIAL NUMBER NEARBY WHEN ORDERING PARTS FOR YOUR MOTION COMPOSITES WHEELCHAIR

9001356_9001357
Elevating Legrest + Calf Pad - Swing-In/Swing-Out, Left

ITEM NO.	PARTNO	DESCRIPTION	9001356 /QTY.	9001357 /QTY.	REPLACEMENT PARTS/QTY.
1	31565	V2 ELEVATING LEGREST LEFT	1	1	-
2	31141	14-16" LEFT ELEVATING LEGREST CALF PAD	1	-	-
3	31143	17-22" LEFT ELEVATING LEGREST CALF PAD	-	1	-
4	31551	V2 FOOTREST PIVOT - ASSEMBLY	-	-	1
5	31549	V2 FOOTREST HOUSING LEFT - ASSEMBLY	-	-	1
6	31158	ELEVATING LEGREST CALF PAD SUPPORT	-	-	1

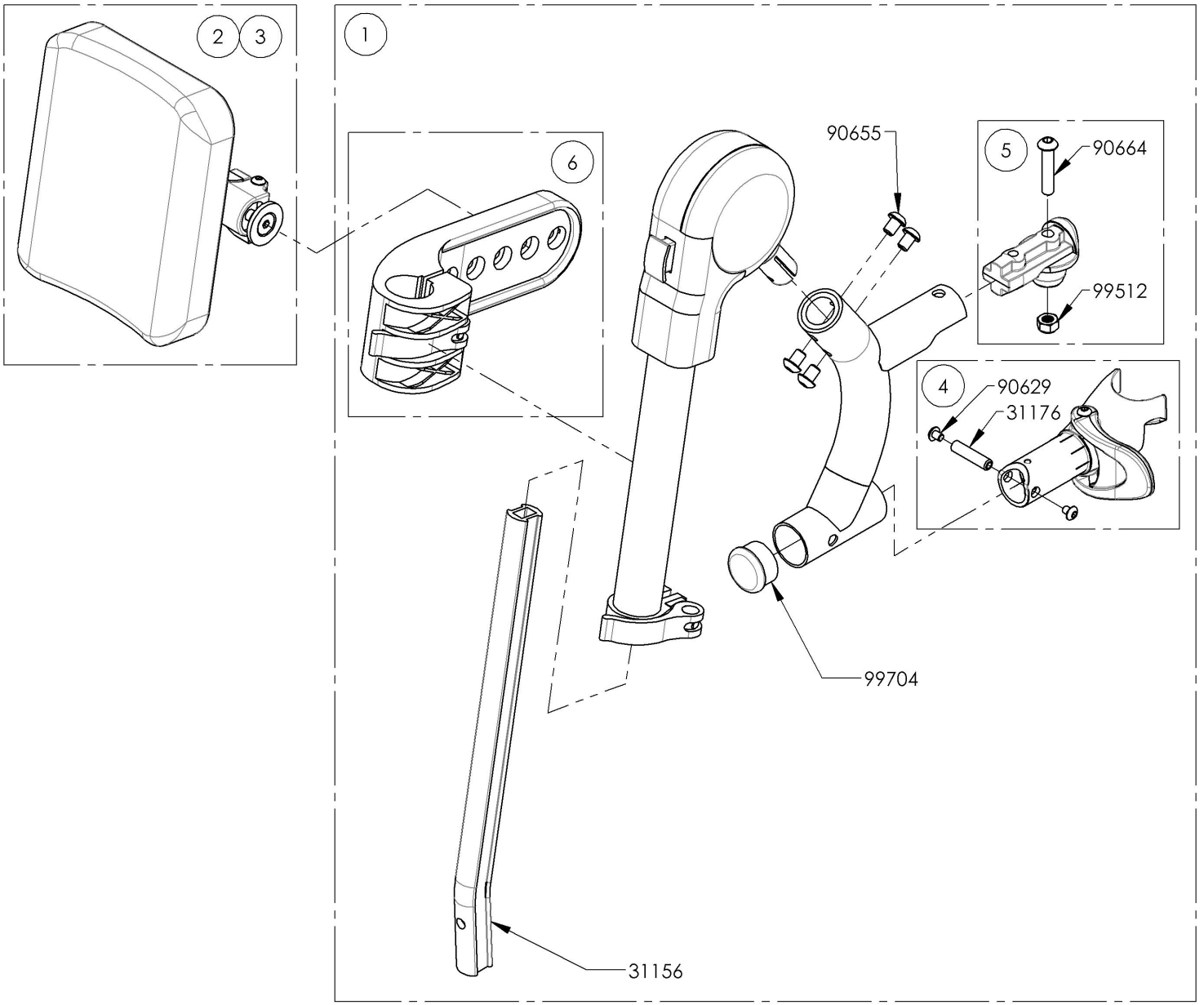

9001356
Elevating Legrest + Calf Pad - Swing-In/Swing-Out, Left
(Wheelchair Width: 14 to 16 in)

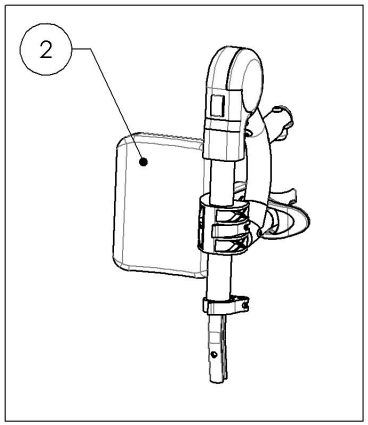

9001357
Elevating Legrest + Calf Pad - Swing-In/Swing-Out, Left
(Wheelchair Width: 17 to 22 in)

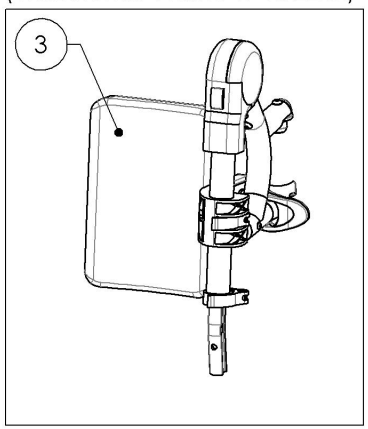

MAKE SURE TO HAVE YOUR SERIAL NUMBER NEARBY WHEN ORDERING PARTS FOR YOUR MOTION COMPOSITES WHEELCHAIR

Footrests Catalogue
Pivot Extension Kit

ITEM NO.	PARTNO	DESCRIPTION	QTY
1	9003079	Footrest - Pivot Extension Kit	1

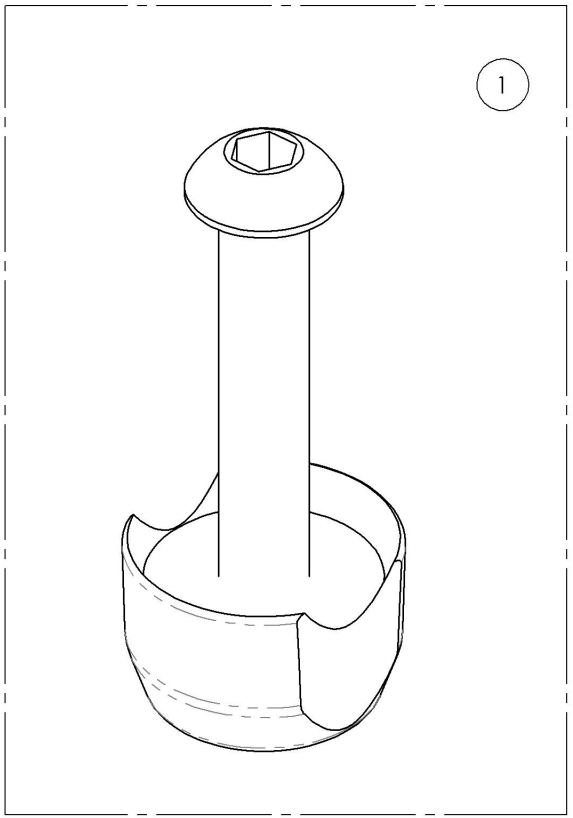

MAKE SURE TO HAVE YOUR SERIAL NUMBER NEARBY WHEN ORDERING PARTS FOR YOUR MOTION COMPOSITES WHEELCHAIR

9003079
Footrest - Pivot Extension Kit

ITEM NO.	PARTNO	DESCRIPTION	9003079 /QTY.
1	31247	V2 FOOTREST PIVOT EXTENSION	1
2	90665	BUTTON HEAD CAP SCREW M6X1 X 35mm LONG, 24mm THREADED + BLUE THREADLOCKER - BLACK ZINC	1

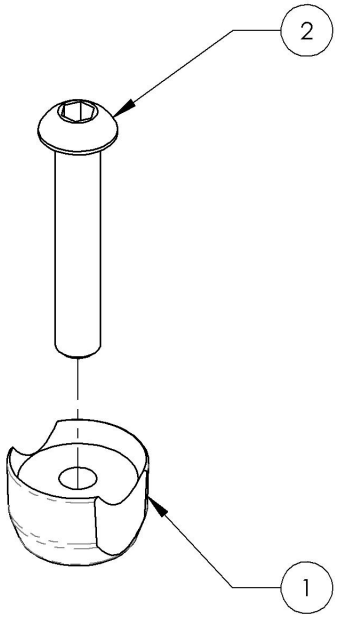

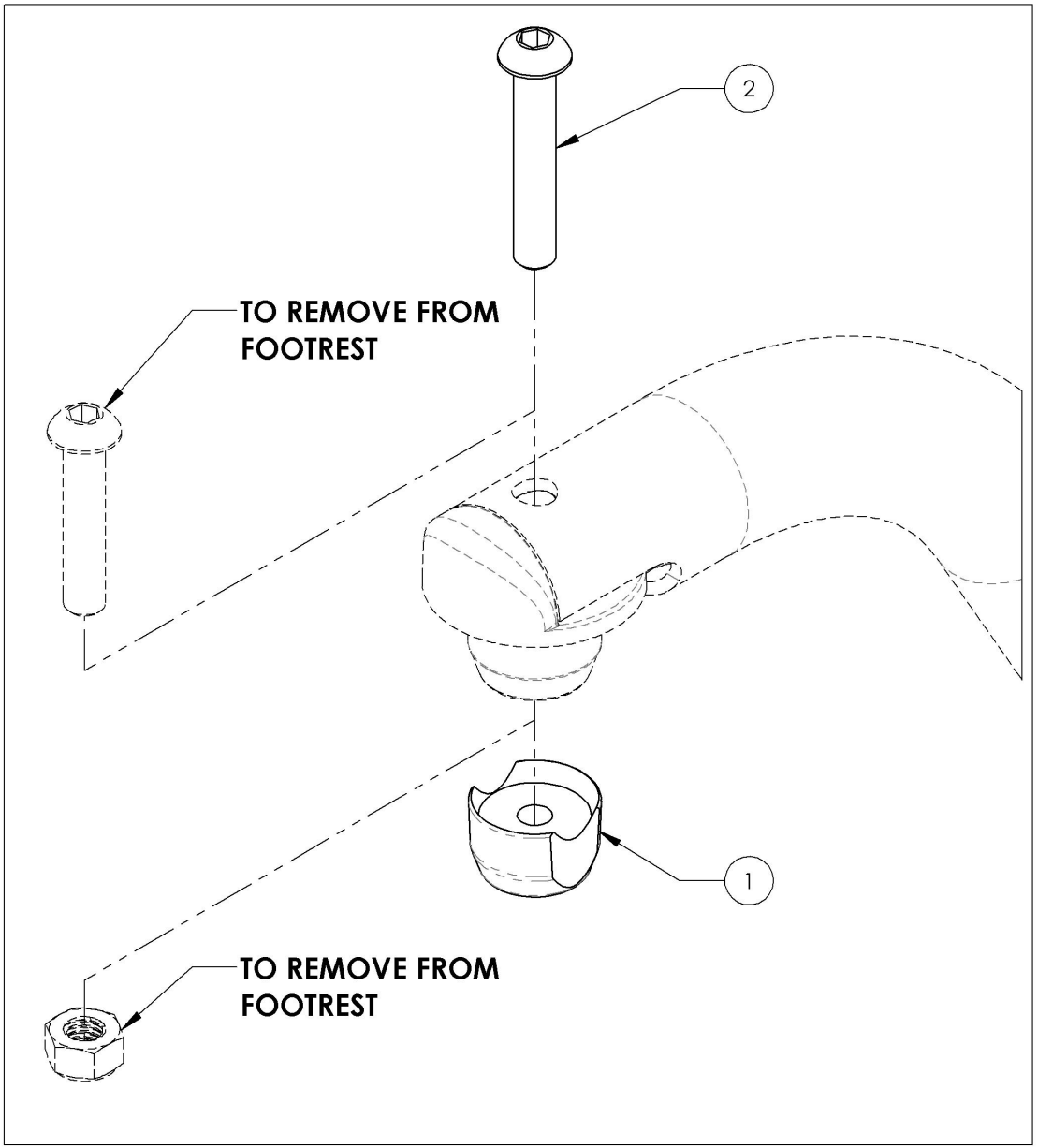

MAKE SURE TO HAVE YOUR SERIAL NUMBER NEARBY WHEN ORDERING PARTS FOR YOUR MOTION COMPOSITES WHEELCHAIR

Footrests Catalogue
Footplates

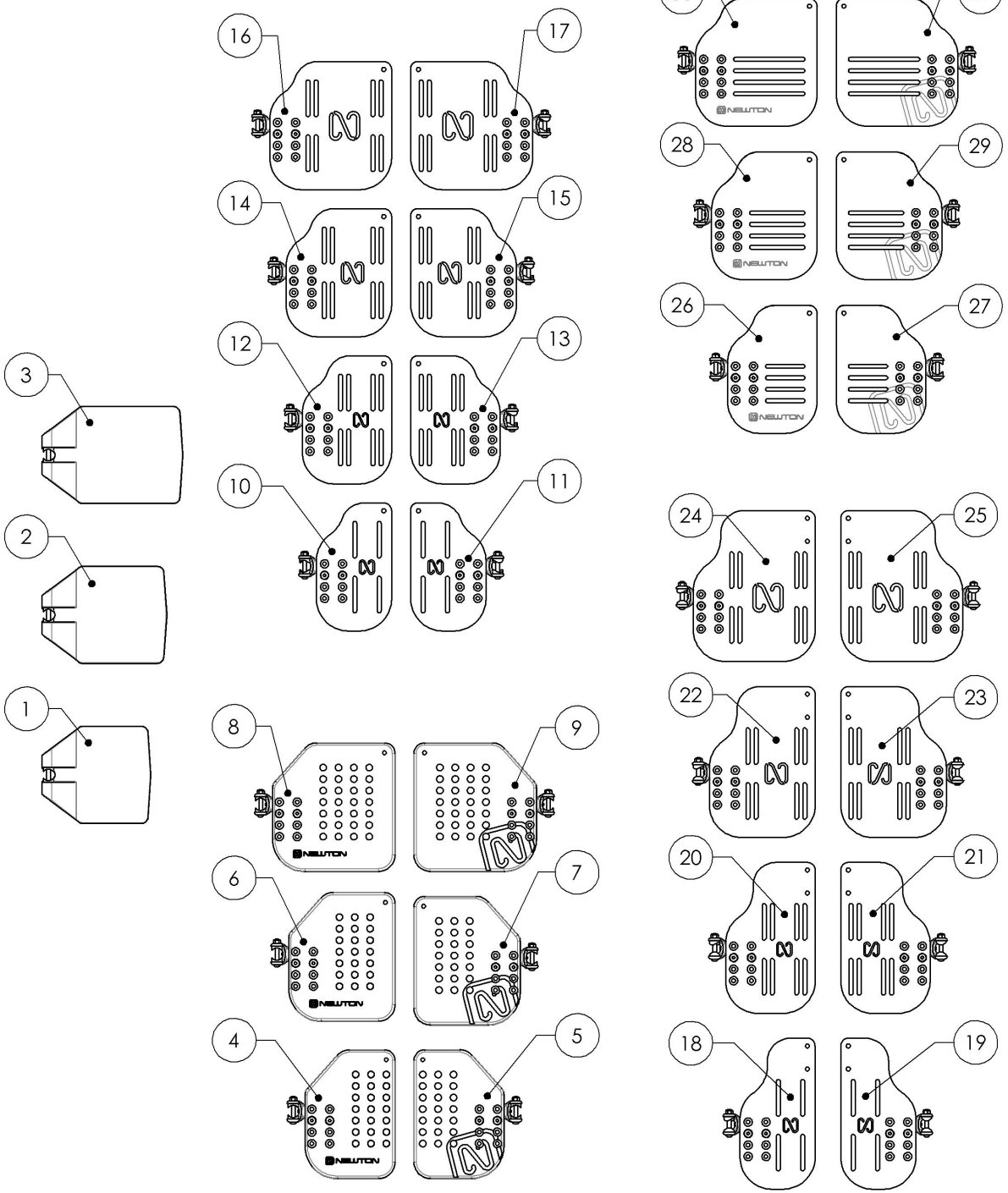

ITEM NO.	PARTNO	DESCRIPTION	QTY
1	9001360	Footplate - Composite, 6 x 6 in (Wheelchair Width: 14 to 16 in)	1
2	9001361	Footplate - Composite, 7 x 6 in (Wheelchair Width: 17 to 18 in)	1
3	9001362	Footplate - Composite, 8 x 6 in (Wheelchair Width: 19 in+)	1
4	9001430	Footplate - Plastic, Newton Angle Adjustable, Right, 5½ x 8 in (Wheelchair Width: 14 to 16 in)	1
5	9001433	Footplate - Plastic, Newton Angle Adjustable, Left, 5½ x 8 in (Wheelchair Width: 14 to 16 in)	1
6	9001431	Footplate - Plastic, Newton Angle Adjustable, Right, 6½ x 8 in (Wheelchair Width: 17 to 18 in)	1
7	9001434	Footplate - Plastic, Newton Angle Adjustable, Left, 6½ x 8 in (Wheelchair Width: 17 to 18 in)	1
8	9001432	Footplate - Plastic, Newton Angle Adjustable, Right, 7½ x 8 in (Wheelchair Width: 19 in+)	1
9	9001435	Footplate - Plastic, Newton Angle Adjustable, Left, 7½ x 8 in (Wheelchair Width: 19 in+)	1
10	9001363	Footplate - Aluminium, Angle Adjustable, Right, 4½ x 8 in (Wheechair Width: 12 to 13 in)	1
11	9001367	Footplate - Aluminium, Angle Adjustable, Left, 4½ x 8 in (Wheechair Width: 12 to 13 in)	1
12	9001364	Footplate - Aluminium, Angle Adjustable, Right, 5½ x 8 in (Wheelchair Width: 14 to 16 in)	1
13	9001368	Footplate - Aluminium, Angle Adjustable, Left, 5½ x 8 in (Wheelchair Width: 14 to 16 in)	1
14	9001365	Footplate - Aluminium, Angle Adjustable, Right, 6½ x 8 in (Wheelchair Width: 17 to 18 in)	1
15	9001369	Footplate - Aluminium, Angle Adjustable, Left, 6½ x 8 in (Wheelchair Width: 17 to 18 in)	1
16	9001366	Footplate - Aluminium, Angle Adjustable, Right, 7½ x 8 in (Wheelchair Width: 19 in+)	1
17	9001370	Footplate - Aluminium, Angle Adjustable, Left, 7½ x 8 in (Wheelchair Width: 19 in+)	1
18	9001398	Footplate - Aluminium, Newton Angle Adjustable, Right, 4½ x 9½ in (Wheelchair Width: 12 to 13 in)	1
19	9001400	Footplate - Aluminium, Newton Angle Adjustable, Left, 4½ x 9½ in (Wheelchair Width: 12 to 13 in)	1
20	9001399	Footplate - Aluminium, Newton Angle Adjustable, Right, 5½ x 9½ in (Wheelchair Width: 14 to 16 in)	1
21	9001401	Footplate - Aluminium, Newton Angle Adjustable, Left, 5½ x 9½ in (Wheelchair Width: 14 to 16 in)	1
22	9002869	Footplate - Aluminium, Newton Angle Adjustable, Right, 6½ x 9½ in (Wheelchair Width: 17 to 18 in)	1
23	9002871	Footplate - Aluminium, Newton Angle Adjustable, Left, 6½ x 9½ in (Wheelchair Width: 17 to 18 in)	1
24	9002870	Footplate - Aluminium, Newton Angle Adjustable, Right, 7½ x 9½ in (Wheelchair Width: 19 in +)	1
25	9002872	Footplate - Aluminium, Newton Angle Adjustable, Left, 7½ x 9½ in (Wheelchair Width: 19 in +)	1
26	9001384	Footplate - Carbon Fiber, Angle Adjustable, Right, 5½ x 8 in (Wheelchair Width: 14 to 16 in)	1
27	9001387	Footplate - Carbon Fiber, Angle Adjustable, Left, 5½ x 8 in (Wheelchair Width: 14 to 16 in)	1
28	9001385	Footplate - Carbon Fiber, Angle Adjustable, Right, 6½ x 8 in (Wheelchair Width: 17 to 18 in)	1
29	9001388	Footplate - Carbon Fiber, Angle Adjustable, Left, 6½ x 8 in (Wheelchair Width: 17 to 18 in)	1
30	9001386	Footplate - Carbon Fiber, Angle Adjustable, Right, 7½ x 8 in (Wheelchair Width: 19 in+)	1
31	9001389	Footplate - Carbon Fiber, Angle Adjustable, Left, 7½ x 8 in (Wheelchair Width: 19 in+)	1
32	9001411	Heel Loop - Length Adjustable	1

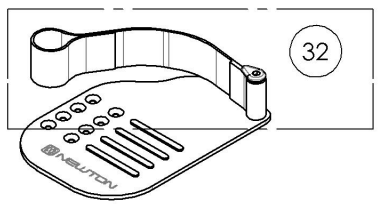

MAKE SURE TO HAVE YOUR SERIAL NUMBER NEARBY WHEN ORDERING PARTS FOR YOUR MOTION COMPOSITES WHEELCHAIR

9001132_9001134
Footplate - Composite, Right

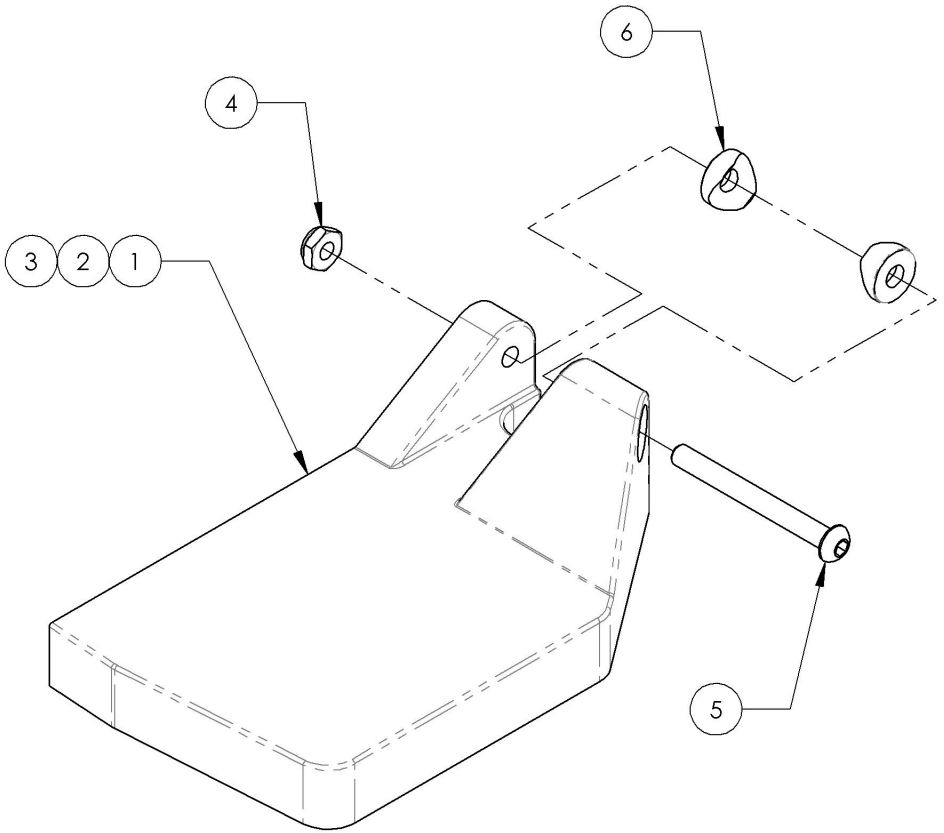

ITEM NO.	PARTNO	DESCRIPTION	9001132 /QTY.	9001133 /QTY.	9001134 /QTY.
1	31275	COMPOSITE FOOTPLATE 6 x 4 in, RIGHT (WHEELCHAIR WIDTH: 14 -16 in)	1	-	-
2	31277	COMPOSITE FOOTPLATE 7 x 4 in, RIGHT (WHEELCHAIR WIDTH: 17-18 in)	-	1	-
3	31279	COMPOSITE FOOTPLATE 8 x 4 in, RIGHT (WHEELCHAIR WIDTH: 19 in +)	-	-	1
4	99510	THIN HEX LOCKNUT 1/4-20	1	1	1
5	90670	BUTTON HEAD CAP SCREW M6X1 X 58mm LONG, 24mm THREADED + BLUE THREADLOCKER - BLACK ZINC	1	1	1
6	31052	COVED WASHER 1_4 x 3_4	2	2	2

9001132
Footplate - Composite, Right, 6 x 4 in (Wheelchair Width: 14 to 16 in)

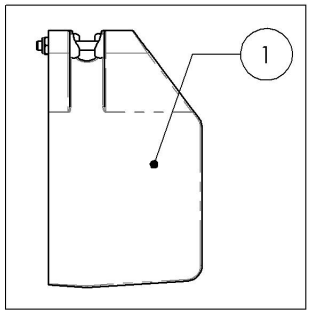

9001133
Footplate - Composite, Right, 7 x 4 in (Wheelchair Width: 17 to 18 in)

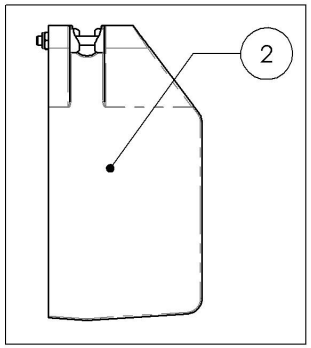

9001134
Footplate - Composite, Right, 8 x 4 in (Wheelchair Width: 19 in +)

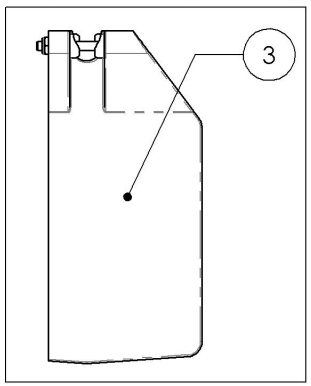

MAKE SURE TO HAVE YOUR SERIAL NUMBER NEARBY WHEN ORDERING PARTS FOR YOUR MOTION COMPOSITES WHEELCHAIR

9001135_9001137
Footplate - Composite, Left

ITEM NO.	PARTNO	DESCRIPTION	9001135 /QTY.	9001136 /QTY.	9001137 /QTY.
1	31276	COMPOSITE FOOTPLATE 6 x 4 in, LEFT (WHEELCHAIR WIDTH: 14 -16 in)	1	-	-
2	31278	COMPOSITE FOOTPLATE 7 x 4 in, LEFT (WHEELCHAIR WIDTH: 17-18 in)	-	1	-
3	31280	COMPOSITE FOOTPLATE 8 x 4 in, LEFT (WHEELCHAIR WIDTH: 19 in +)	-	-	1
4	99510	THIN HEX LOCKNUT 1/4-20	1	1	1
5	90670	BUTTON HEAD CAP SCREW M6X1 X 58mm LONG, 24mm THREADED + BLUE THREADLOCKER - BLACK ZINC	1	1	1
6	31052	COVED WASHER 1_4 x 3_4	2	2	2

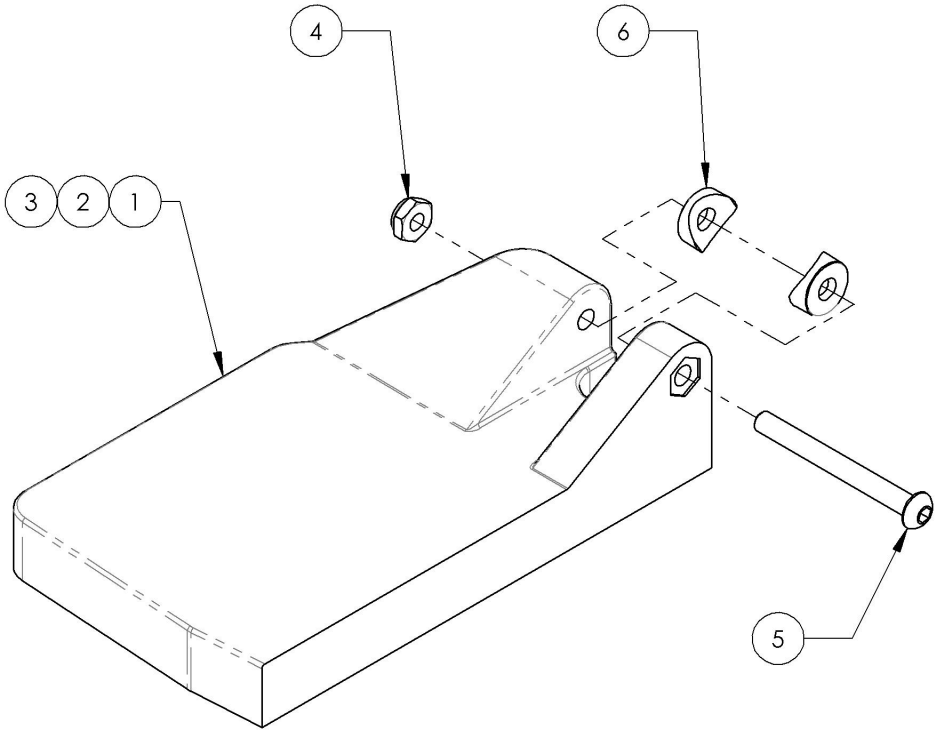

9001135
Footplate - Composite, Left, 6 x 4 in (Wheelchair Width: 14 to 16 in)

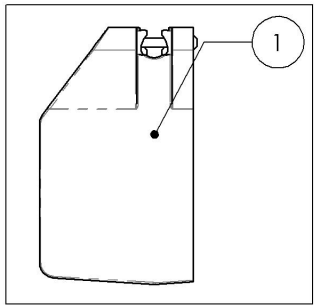

9001136
Footplate - Composite, Left, 7 x 4 in (Wheelchair Width: 17 to 18 in)

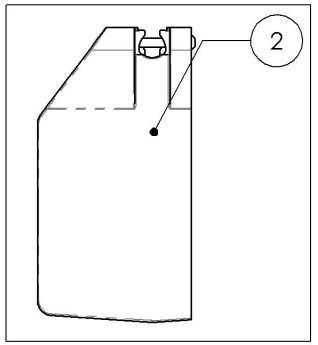

9001137
Footplate - Composite, Left, 8 x 4 in (Wheelchair Width: 19 in +)

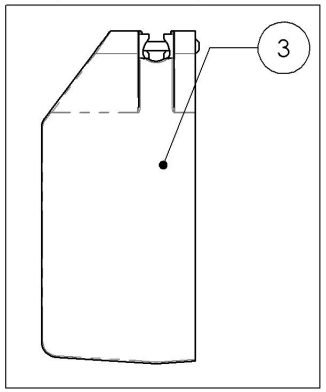

MAKE SURE TO HAVE YOUR SERIAL NUMBER NEARBY WHEN ORDERING PARTS FOR YOUR MOTION COMPOSITES WHEELCHAIR

9001360_9001362
Footplate - Composite, 6 in Depth

ITEM NO.	PARTNO	DESCRIPTION	9001360 /QTY.	9001361 /QTY.	9001362 /QTY.
1	31025	Standard Footplates (Wheelchair Width: 14-16 in)	1	-	-
2	31026	Standard Footplates (Wheelchair Width: 17-18 in)	-	1	-
3	31027	Standard Footplates (Wheelchair Width: 19 in +)	-	-	1

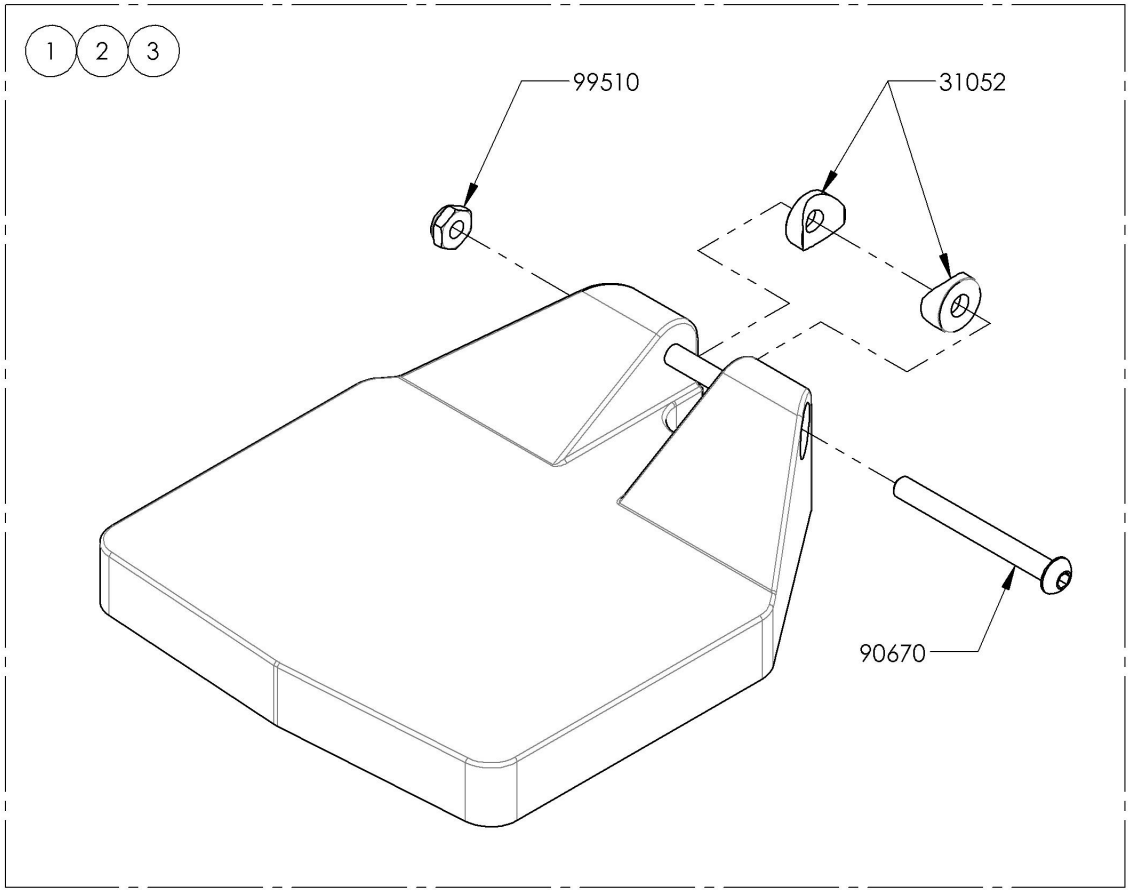

9001360
Footplate - Composite, 6 x 6 in
(Wheelchair Width: 14 to 16 in)

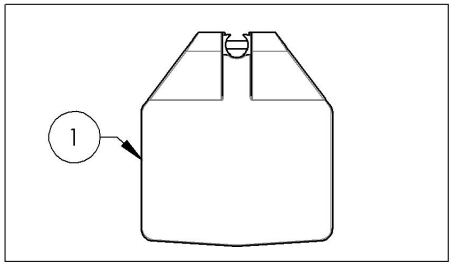

9001361
Footplate - Composite, 7 x 6 in
(Wheelchair Width: 17 to 18 in)

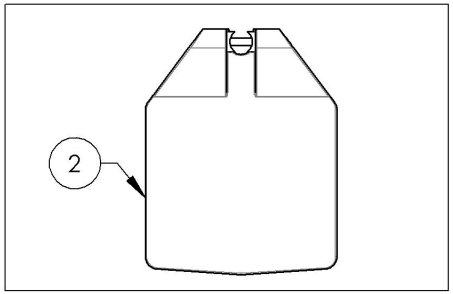

9001362
Footplate - Composite, 8 x 6 in
(Wheelchair Width: 19 in+)

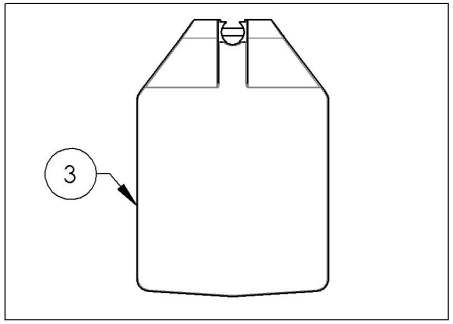

MAKE SURE TO HAVE YOUR SERIAL NUMBER NEARBY WHEN ORDERING PARTS FOR YOUR MOTION COMPOSITES WHEELCHAIR

9001430_9001432
Footplate - Plastic, Newton Angle Adjustable, Right, 8 in Depth

ITEM NO.	PARTNO	DESCRIPTION	9001430 /QTY.	9001431 /QTY.	9001432 /QTY.
1	31589	14-16" PLASTIC ANGLE ADJUSTABLE FOOTPLATE RIGHT - ASSEMBLY	1	-	-
2	31591	17-18" PLASTIC ANGLE ADJUSTABLE FOOTPLATE RIGHT - ASSEMBLY	-	1	-
3	31593	19-20" PLASTIC ANGLE ADJUSTABLE FOOTPLATE RIGHT - ASSEMBLY	-	-	1

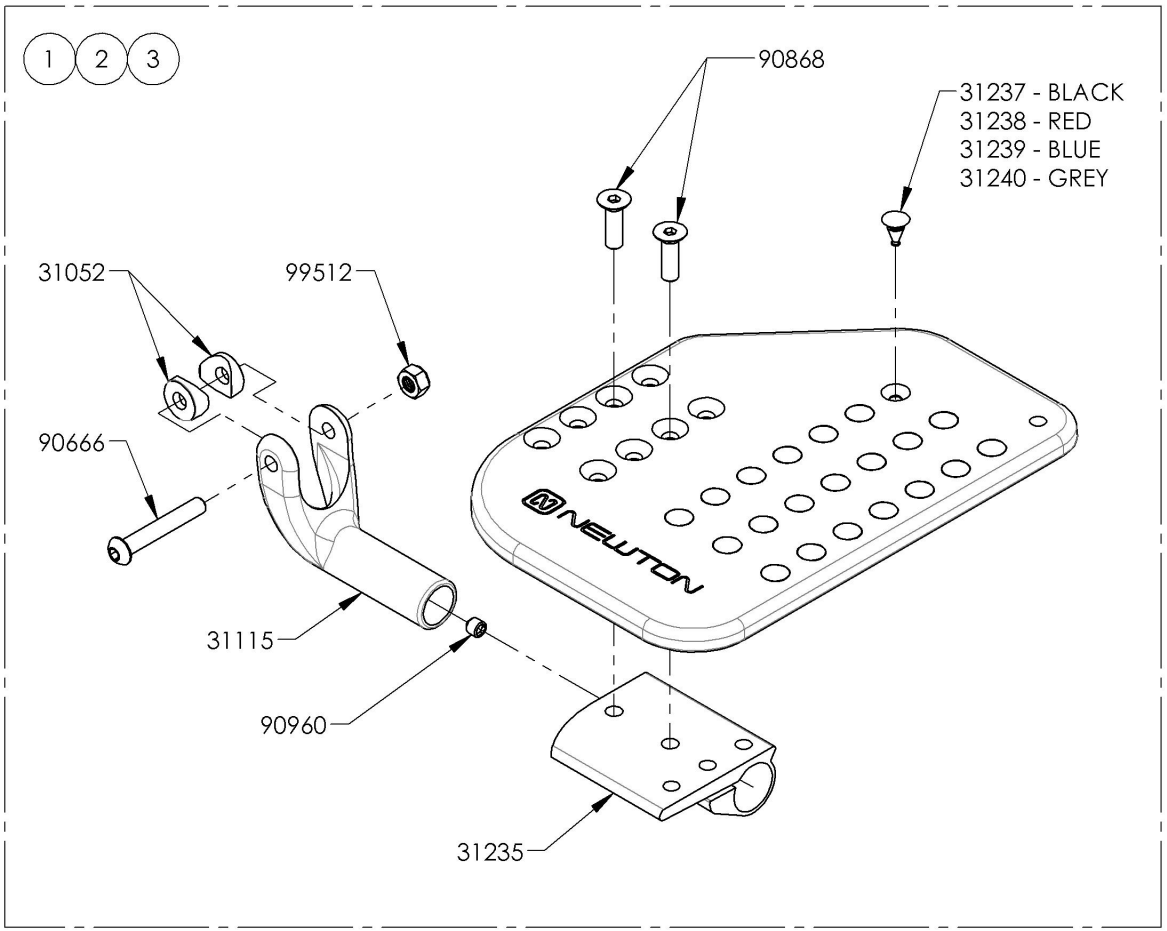

9001430
Footplate - Plastic, Newton Angle Adjustable, Right, 5½ x 8 in (Wheelchair Width: 14 to 16 in)

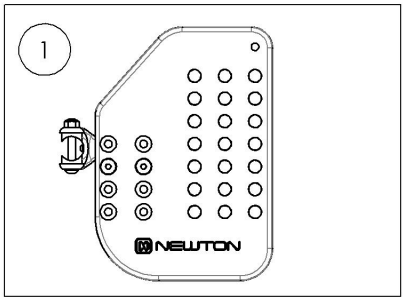

9001431
Footplate - Plastic, Newton Angle Adjustable, Right, 6½ x 8 in (Wheelchair Width: 17 to 18 in)

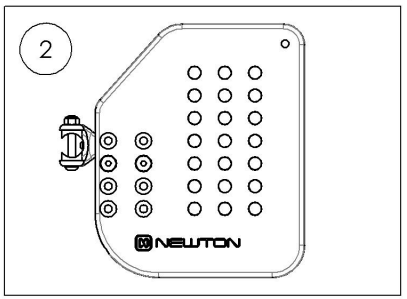

9001432
Footplate - Plastic, Newton Angle Adjustable, Right, 7½ x 8 in (Wheelchair Width: 19 in+)

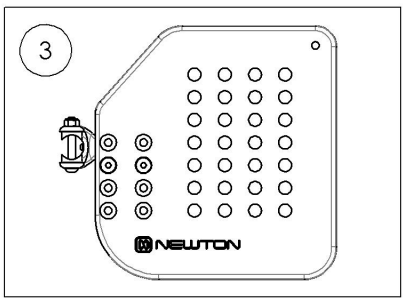

MAKE SURE TO HAVE YOUR SERIAL NUMBER NEARBY WHEN ORDERING PARTS FOR YOUR MOTION COMPOSITES WHEELCHAIR

9001433_9001435
Footplate - Plastic, Newton Angle adjustable, Left, 8 in Depth

ITEM NO.	PARTNO	DESCRIPTION	9001433 /QTY.	9001434 /QTY.	9001435 /QTY.
1	31590	14-16" PLASTIC ANGLE ADJUSTABLE FOOTPLATE LEFT - ASSEMBLY	1	-	-
2	31592	17-18" PLASTIC ANGLE ADJUSTABLE FOOTPLATE LEFT - ASSEMBLY	-	1	-
3	31594	19-20" PLASTIC ANGLE ADJUSTABLE FOOTPLATE LEFT - ASSEMBLY	-	-	1

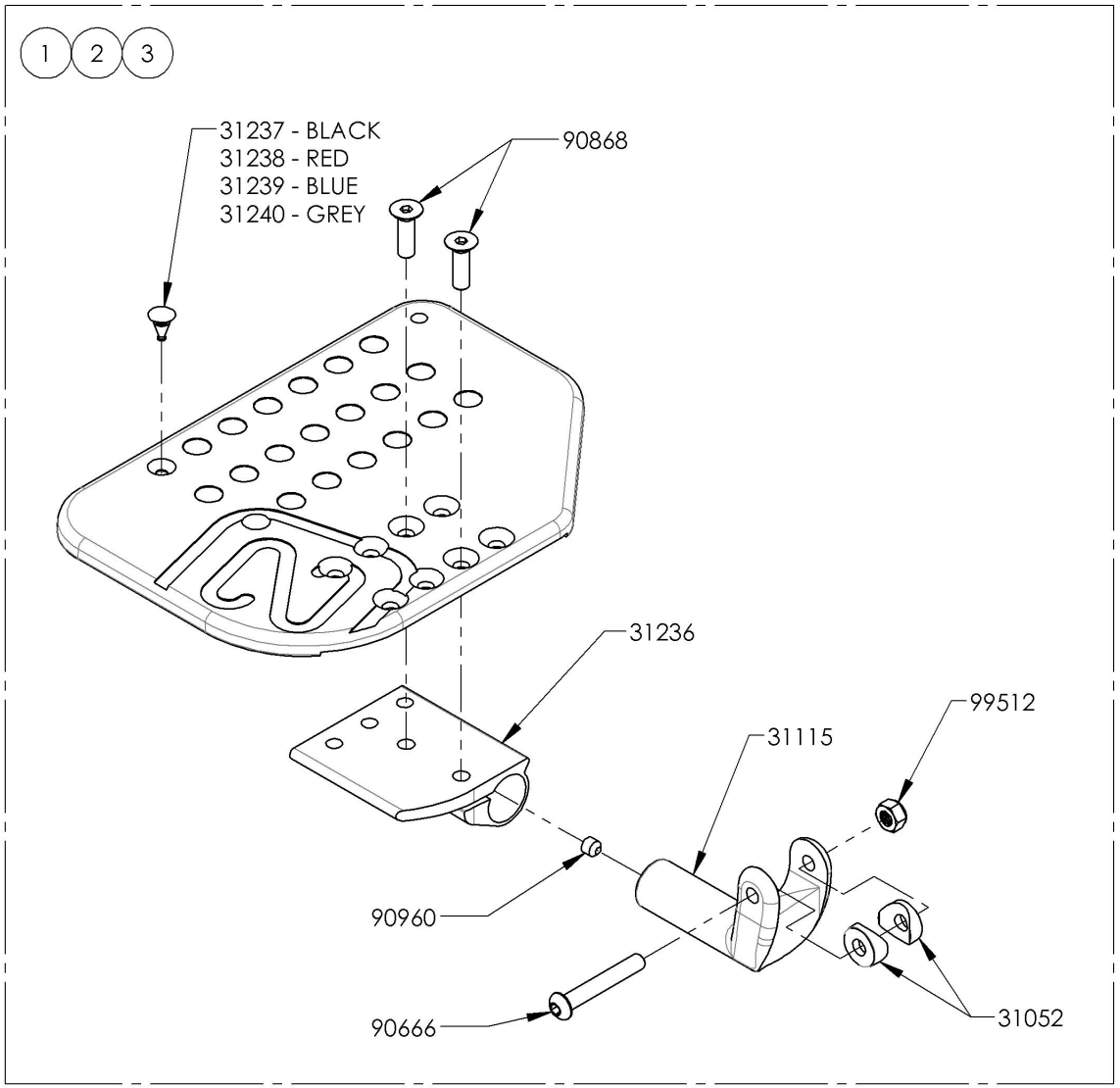

9001433
Footplate - Plastic, Newton Angle Adjustable, Left, 5½ x 8 in (Wheelchair Width: 14 to 16 in)

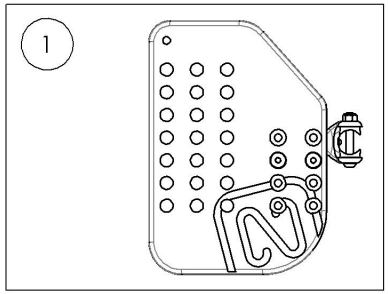

9001434
Footplate - Plastic, Newton Angle Adjustable, Left, 6½ x 8 in (Wheelchair Width: 17 to 18 in)

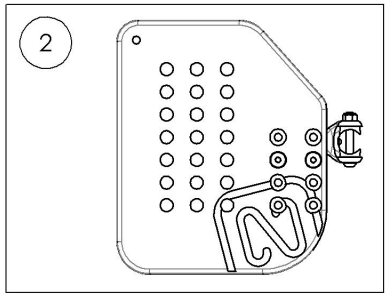

9001435
Footplate - Plastic, Newton Angle Adjustable, Left, 7½ x 8 in (Wheelchair Width: 19 in+)

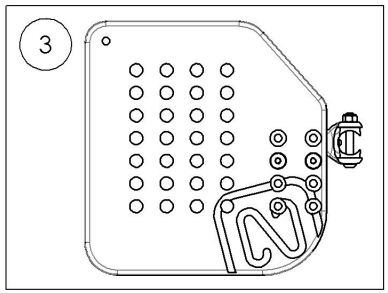

MAKE SURE TO HAVE YOUR SERIAL NUMBER NEARBY WHEN ORDERING PARTS FOR YOUR MOTION COMPOSITES WHEELCHAIR

9001363_9001366
Footplate - Aluminium, Newton Angle Adjustable, Right, 8 in Depth

ITEM NO.	PARTNO	DESCRIPTION	9001363 /QTY.	9001364 /QTY.	9001365 /QTY.	9001366 /QTY.
1	31595	ADJUSTABLE NEWTON ALU FOOTPLATE 4.5 x 8 in, RIGHT (WC WIDTH 12-13 in) - ASSEMBLY	1	-	-	-
2	31597	ADJUSTABLE NEWTON ALU FOOTPLATE 5.5 x 8 in, RIGHT (WC WIDTH 14-16 in) - ASSEMBLY	-	1	-	-
3	31599	ADJUSTABLE NEWTON ALU FOOTPLATE 6.5 x 8 in, RIGHT (WC WIDTH 17-18 in) - ASSEMBLY	-	-	1	-
4	31601	ADJUSTABLE NEWTON ALU FOOTPLATE 7.5 x 8 in, RIGHT (WC WIDTH 19 in +) - ASSEMBLY	-	-	-	1

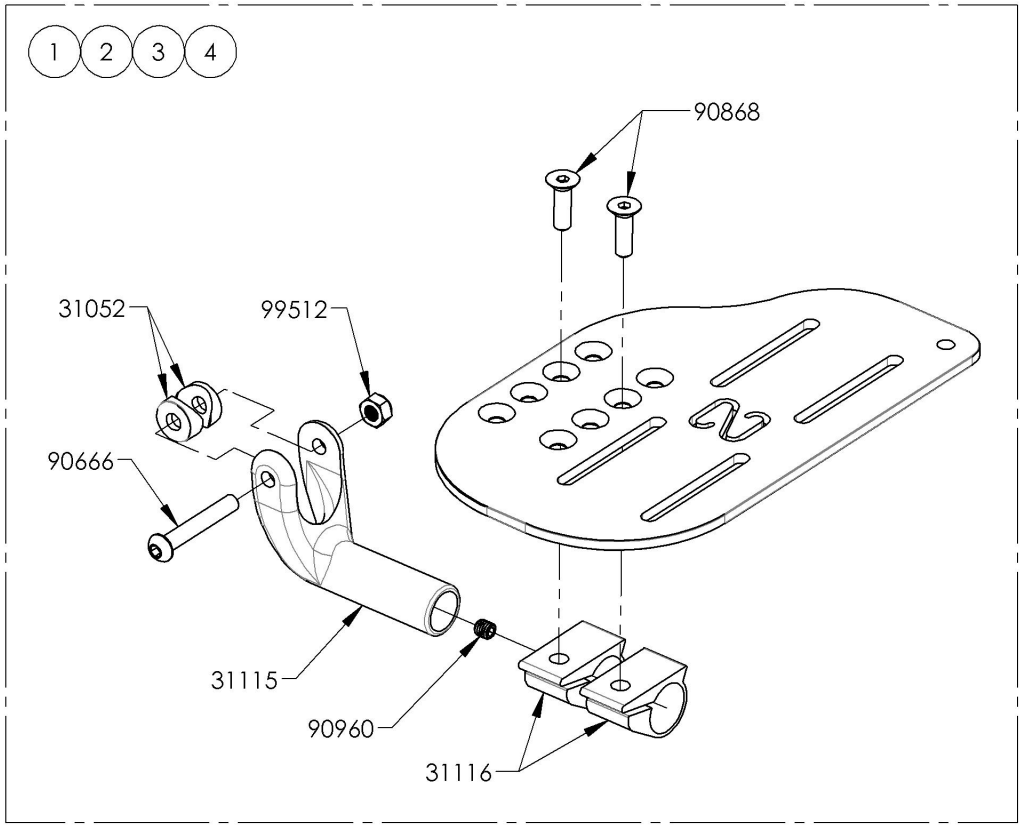

9001363
Footplate - Aluminium, Newton Angle Adjustable, Right, 4½ x 8 in (Wheechair Width: 12 to 13 in)

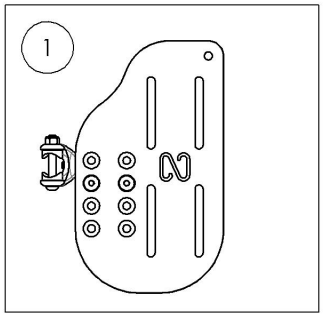

9001364
Footplate - Aluminium, Newton Angle Adjustable, Right, 5½ x 8 in (Wheelchair Width: 14 to 16 in)

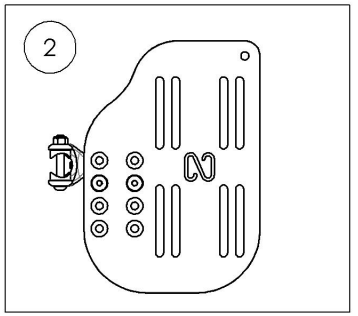

9001365
Footplate - Aluminium, Newton Angle Adjustable, Right, 6½ x 8 in (Wheelchair Width: 17 to 18 in)

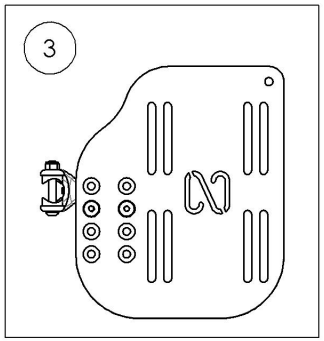

9001366
Footplate - Aluminium, Newton Angle Adjustable, Right, 7½ x 8 in (Wheelchair Width: 19 in+)

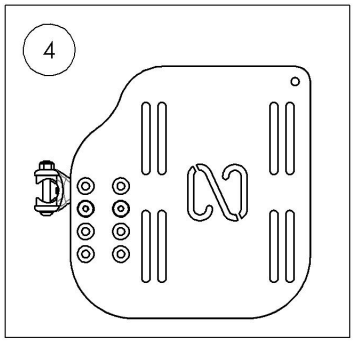

MAKE SURE TO HAVE YOUR SERIAL NUMBER NEARBY WHEN ORDERING PARTS FOR YOUR MOTION COMPOSITES WHEELCHAIR

9001367_9001370
Footplate - Aluminium, Newton Angle Adjustable, Left, 8 in Depth

ITEM NO.	PARTNO	DESCRIPTION	9001367 /QTY.	9001368 /QTY.	9001369 /QTY.	9001370 /QTY.
1	31596	ADJUSTABLE NEWTON ALU FOOTPLATE 4.5 x 8 in, LEFT (WC WIDTH 12-13 in) - ASSEMBLY	1	-	-	-
2	31598	ADJUSTABLE NEWTON ALU FOOTPLATE 5.5 x 8 in, LEFT (WC WIDTH 14-16 in) - ASSEMBLY	-	1	-	-
3	31600	ADJUSTABLE NEWTON ALU FOOTPLATE 6.5 x 8 in, LEFT (WC WIDTH 17-18 in) - ASSEMBLY	-	-	1	-
4	31602	ADJUSTABLE NEWTON ALU FOOTPLATE 7.5 x 8 in, LEFT (WC WIDTH 19 in +) - ASSEMBLY	-	-	-	1

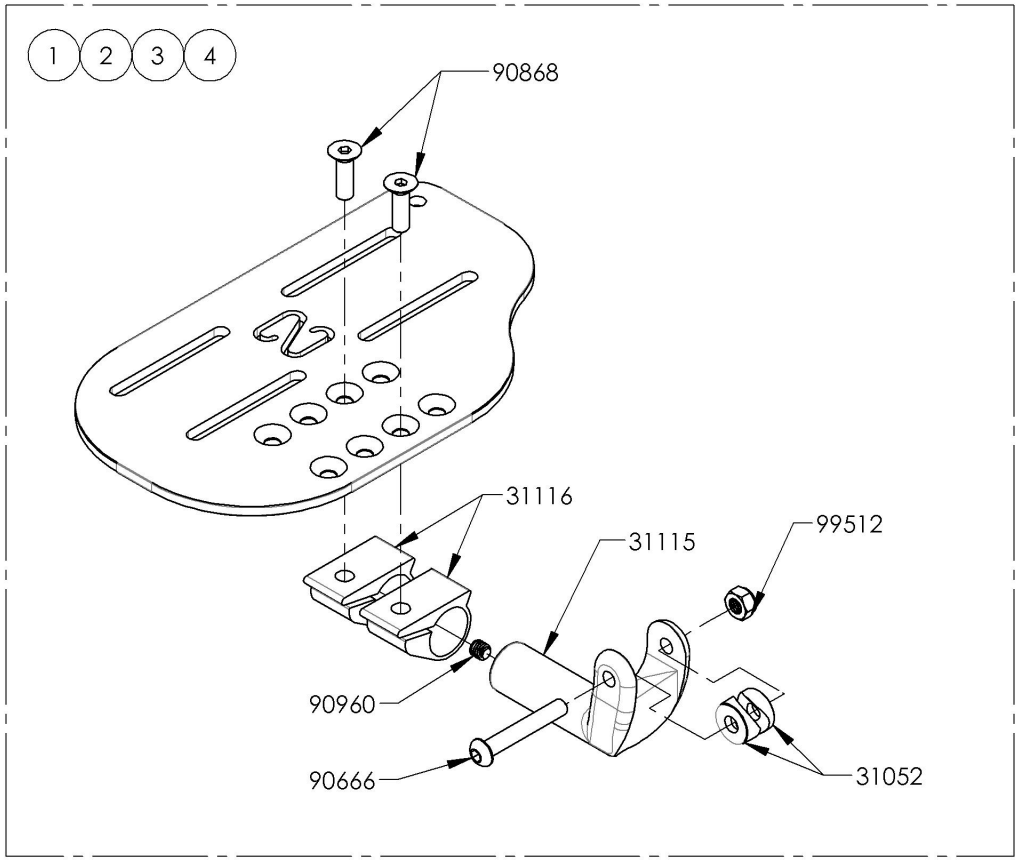

9001367
Footplate - Aluminium, Newton Angle Adjustable, Left, 4½ x 8 in (Wheechair Width: 12 to 13 in)

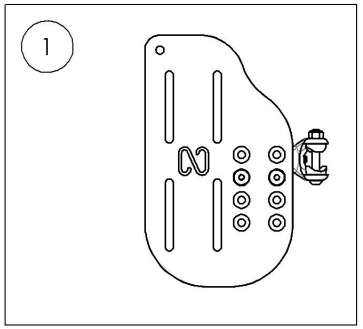

9001368
Footplate - Aluminium, Newton Angle Adjustable, Left, 5½ x 8 in (Wheelchair Width: 14 to 16 in)

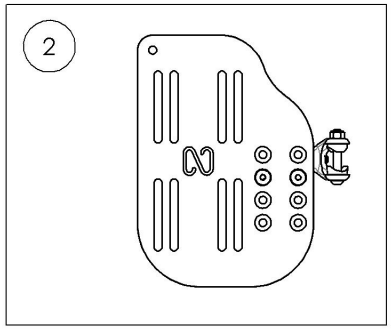

9001369
Footplate - Aluminium, Newton Angle Adjustable, Left, 6½ x 8 in (Wheelchair Width: 17 to 18 in)

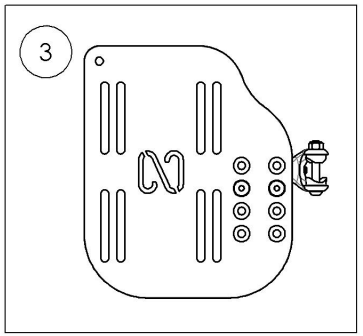

9001370
Footplate - Aluminium, Newton Angle Adjustable, Left, 7½ x 8 in (Wheelchair Width: 19 in +)

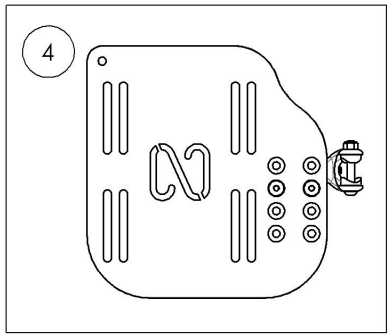

MAKE SURE TO HAVE YOUR SERIAL NUMBER NEARBY WHEN ORDERING PARTS FOR YOUR MOTION COMPOSITES WHEELCHAIR

9001398_9001399 & 9002869_9002870
Footplate - Aluminium, Newton Angle Adjustable, Right, 9½ in Depth

ITEM NO.	PARTNO	DESCRIPTION	9001398 /QTY.	9001399 /QTY.	9002869 /QTY.	9002870 /QTY.
1	31603	ADJUSTABLE NEWTON ALU FOOTPLATE 4.5 x 9.5 in, RIGHT (WHEELCHAIR WIDTH 12-13 in) - ASSEMBLY	1	-	-	-
2	31605	ADJUSTABLE NEWTON ALU FOOTPLATE 5.5 x 9.5 in, RIGHT (WHEELCHAIR WIDTH 14-16 in) - ASSEMBLY	-	1	-	-
3	31630	ADJUSTABLE NEWTON ALU FOOTPLATE 6.5 x 9.5 in, RIGHT (WHEELCHAIR WIDTH 17-18 in) - ASSEMBLY	-	-	1	-
4	31632	ADJUSTABLE NEWTON ALU FOOTPLATE 7.5 x 9.5 in, RIGHT (WHEELCHAIR WIDTH 19 in +) - ASSEMBLY	-	-	-	1

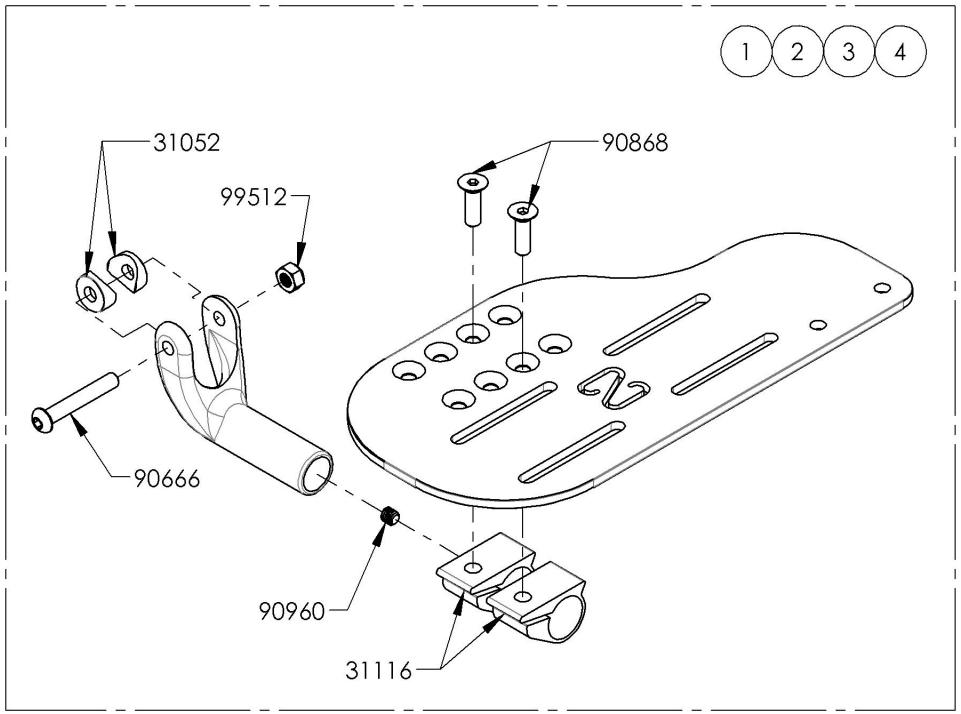

9001398
Footplate - Aluminium, Newton Angle Adjustable, Right, 4½ x 9½ in (Wheelchair Width: 12 to 13 in)

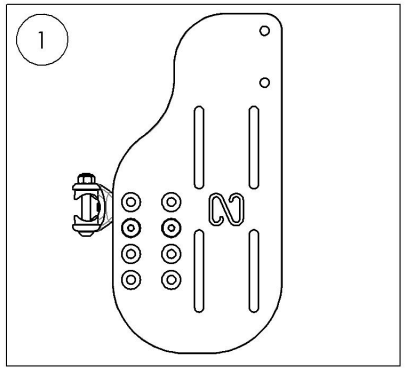

9001399
Footplate - Aluminium, Newton Angle Adjustable, Right, 5½ x 9½ in (Wheelchair Width: 14 to 16 in)

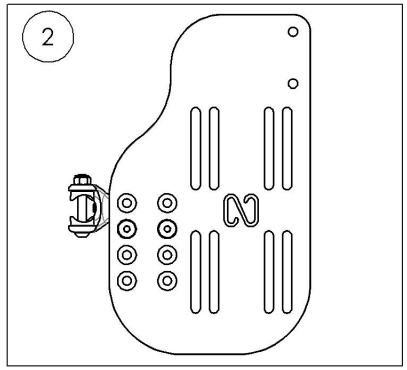

9002869
Footplate - Aluminium, Newton Angle Adjustable, Right, 6½ x 9½ in (Wheelchair Width: 17 to 18 in)

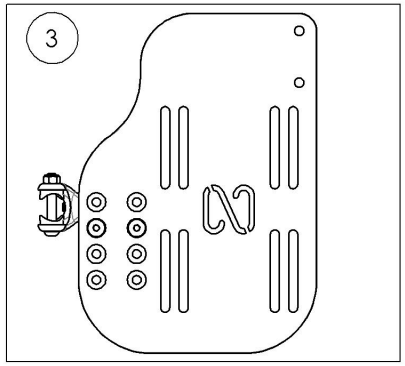

9002870
Footplate - Aluminium, Newton Angle Adjustable, Right, 7½ x 9½ in (Wheelchair Width: 19 in +)

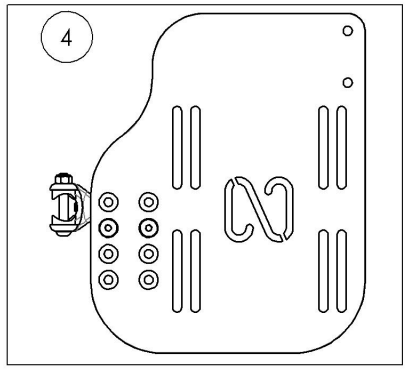

MAKE SURE TO HAVE YOUR SERIAL NUMBER NEARBY WHEN ORDERING PARTS FOR YOUR MOTION COMPOSITES WHEELCHAIR

9001400_9001401 & 9002871_9002872
Footplate - Aluminium, Newton Angle Adjustable, Left, 9½ in Depth

ITEM NO.	PARTNO	DESCRIPTION	9001400 /QTY.	9001401 /QTY.	9002871 /QTY.	9002872 /QTY.
1	31604	ADJUSTABLE NEWTON ALU FOOTPLATE 4.5 x 9.5 in, LEFT (WHEELCHAIR WIDTH 12-13 in) - ASSEMBLY	1	-	-	-
2	31606	ADJUSTABLE NEWTON ALU FOOTPLATE 5.5 x 9.5 in, LEFT (WHEELCHAIR WIDTH 14-16 in) - ASSEMBLY	-	1	-	-
3	31631	ADJUSTABLE NEWTON ALU FOOTPLATE 6.5 x 9.5 in, LEFT (WHEELCHAIR WIDTH 17-18 in) - ASSEMBLY	-	-	1	-
4	31633	ADJUSTABLE NEWTON ALU FOOTPLATE 7.5 x 9.5 in, LEFT (WHEELCHAIR WIDTH 19 in +) - ASSEMBLY	-	-	-	1

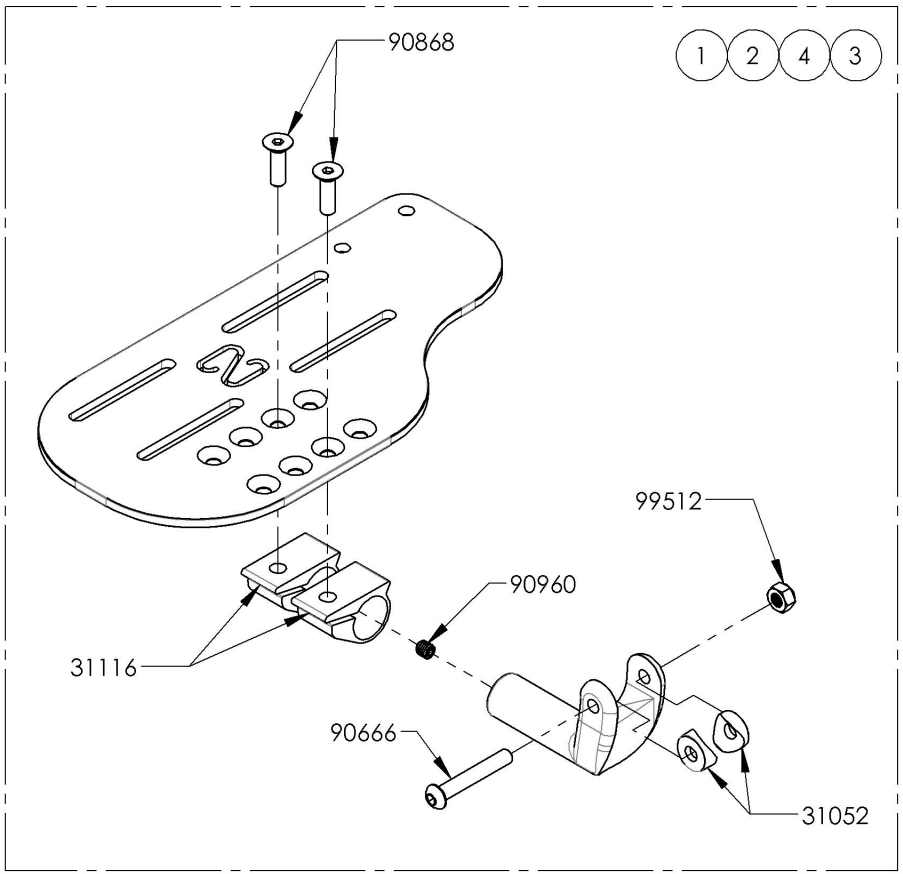

9001400
Footplate - Aluminium, Newton Angle Adjustable, Left, 4½ x 9½ in
(Wheelchair Width: 12 to 13 in)

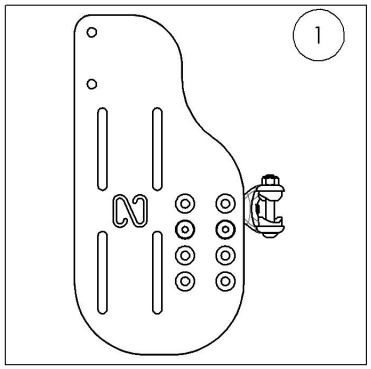

9001401
Footplate - Aluminium, Newton Angle Adjustable, Left, 5½ x 9½ in
(Wheelchair Width: 14 to 16 in)

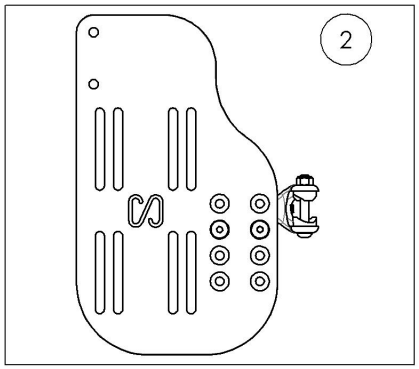

9002871
Footplate - Aluminium, Newton Angle Adjustable, Left, 6½ x 9½ in
(Wheelchair Width: 17 to 18 in)

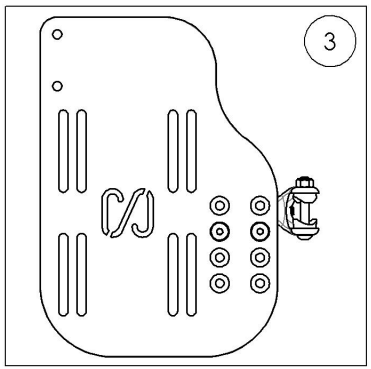

9002872
Footplate - Aluminium, Newton Angle Adjustable, Left, 7½ x 9½ in
(Wheelchair Width: 19 in +)

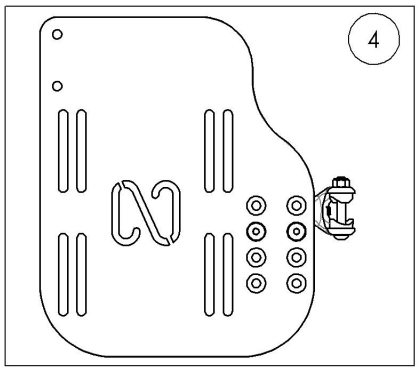

MAKE SURE TO HAVE YOUR SERIAL NUMBER NEARBY WHEN ORDERING PARTS FOR YOUR MOTION COMPOSITES WHEELCHAIR

9001384_9001386
Footplate - Carbon Fiber, Angle Adjustable, Right, 8 in Depth

ITEM NO.	PARTNO	DESCRIPTION	9001384 /QTY.	9001385 /QTY.	9001386 /QTY.
1	31607	ADJUSTABLE NEWTON CARBON FOOTPLATE 5.5 x 8 in, RIGHT (WHEELCHAIR WIDTH 14-16 in) - ASSEMBLY	1	-	-
2	31609	ADJUSTABLE NEWTON CARBON FOOTPLATE 6.5 x 8 in, RIGHT (WHEELCHAIR WIDTH 17-18 in) - ASSEMBLY	-	1	-
3	31611	ADJUSTABLE NEWTON CARBON FOOTPLATE 7.5 x 8 in, RIGHT (WHEELCHAIR WIDTH 19 in +) - ASSEMBLY	-	-	1

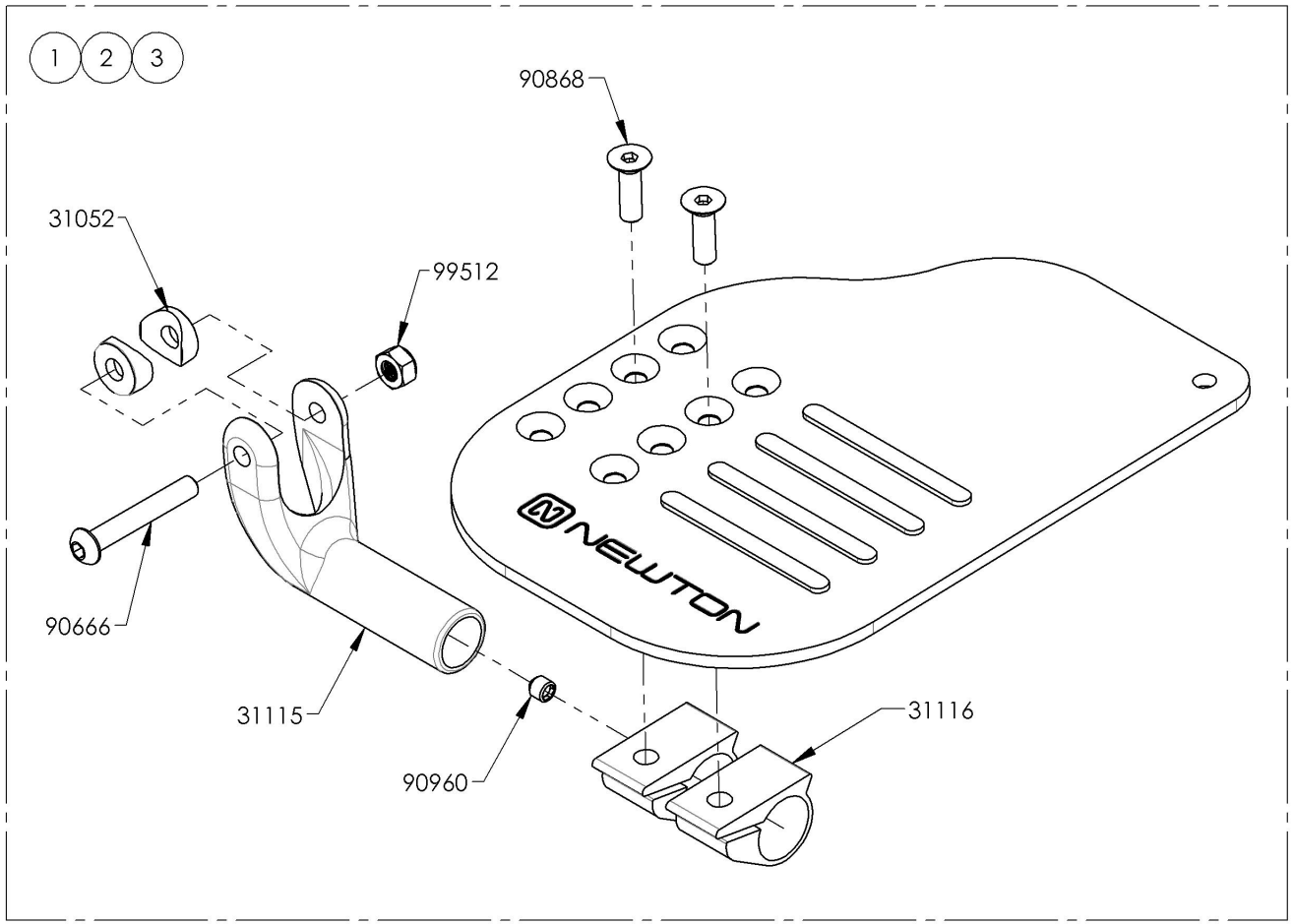

9001384
Footplate - Carbon Fiber, Angle Adjustable, Right, 5½ x 8 in (Wheelchair Width: 14 to 16 in)

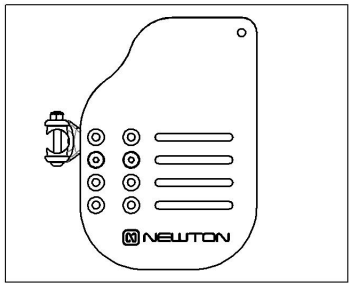

9001385
Footplate - Carbon Fiber, Angle Adjustable, Right, 6½ x 8 in (Wheelchair Width: 17 to 18 in)

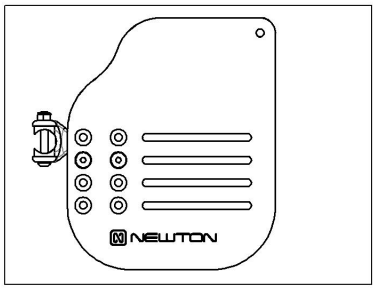

9001386
Footplate - Carbon Fiber, Angle Adjustable, Right, 7½ x 8 in (Wheelchair Width: 19 in+)

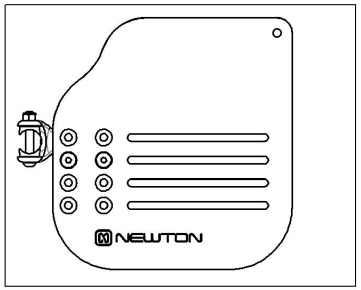

MAKE SURE TO HAVE YOUR SERIAL NUMBER NEARBY WHEN ORDERING PARTS FOR YOUR MOTION COMPOSITES WHEELCHAIR

9001387_9001389
Footplate - Carbon Fiber, Angle adjustable, Left, 8 in Depth

ITEM NO.	PARTNO	DESCRIPTION	9001387 /QTY.	9001388 /QTY.	9001389 /QTY.
1	31608	ADJUSTABLE NEWTON CARBON FOOTPLATE 5.5 x 8 in, LEFT (WHEELCHAIR WIDTH 14-16 in) - ASSEMBLY	1	-	-
2	31610	ADJUSTABLE NEWTON CARBON FOOTPLATE 6.5 x 8 in, LEFT (WHEELCHAIR WIDTH 17-18 in) - ASSEMBLY	-	1	-
3	31612	ADJUSTABLE NEWTON CARBON FOOTPLATE 7.5 x 8 in, LEFT (WHEELCHAIR WIDTH 19 in +) - ASSEMBLY	-	-	1

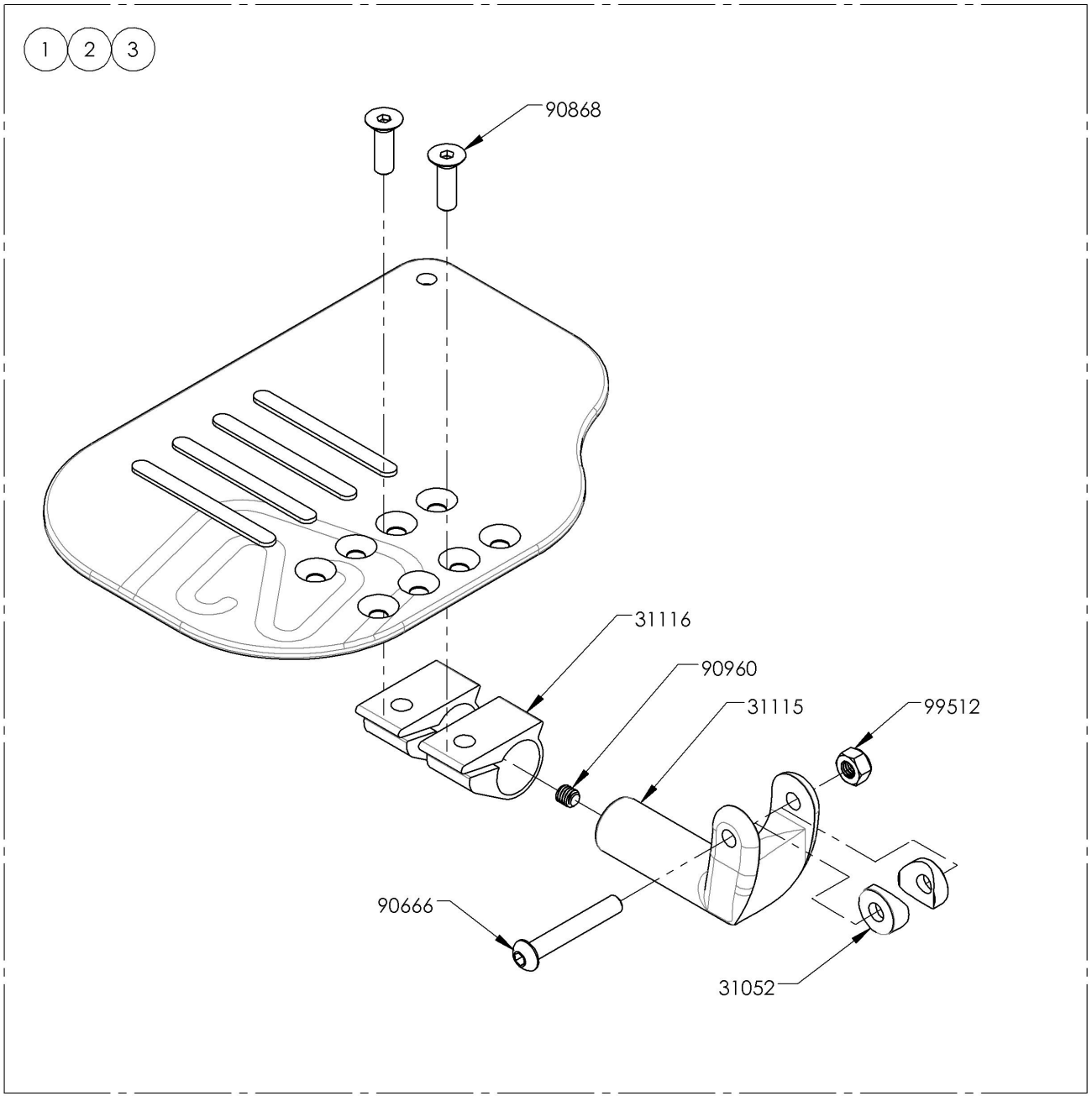

9001387
Footplate - Carbon Fiber, Angle Adjustable, Left, 5½ x 8 in (Wheelchair Width: 14 to 16 in)

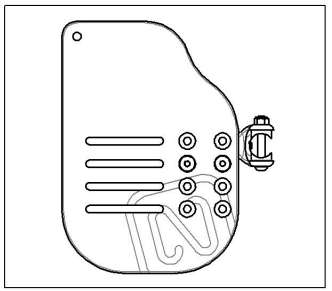

9001388
Footplate - Carbon Fiber, Angle Adjustable, Left, 6½ x 8 in (Wheelchair Width: 17 to 18 in)

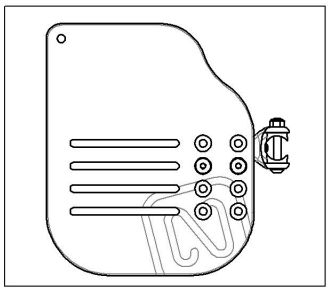

9001389
Footplate - Carbon Fiber, Angle Adjustable, Left, 7½ x 8 in (Wheelchair Width: 19 in+)

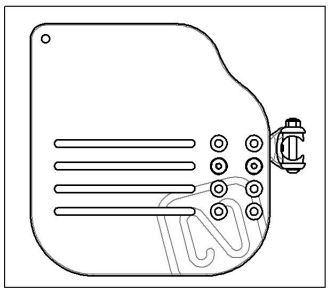

MAKE SURE TO HAVE YOUR SERIAL NUMBER NEARBY WHEN ORDERING PARTS FOR YOUR MOTION COMPOSITES WHEELCHAIR

9001411
Heel Loop - Length Adjustable

ITEM NO.	PARTNO	DESCRIPTION	9001411 /QTY.
1	31016	HEEL LOOP PIN (M)	1
2	31045	ADJUSTABLE HEEL LOOP	1
3	99559	COLLAR LOCKWASHER 1_4	1
4	91024	LOW PROFIL CAP SCREW M6 X 2.54 X 25mm	1

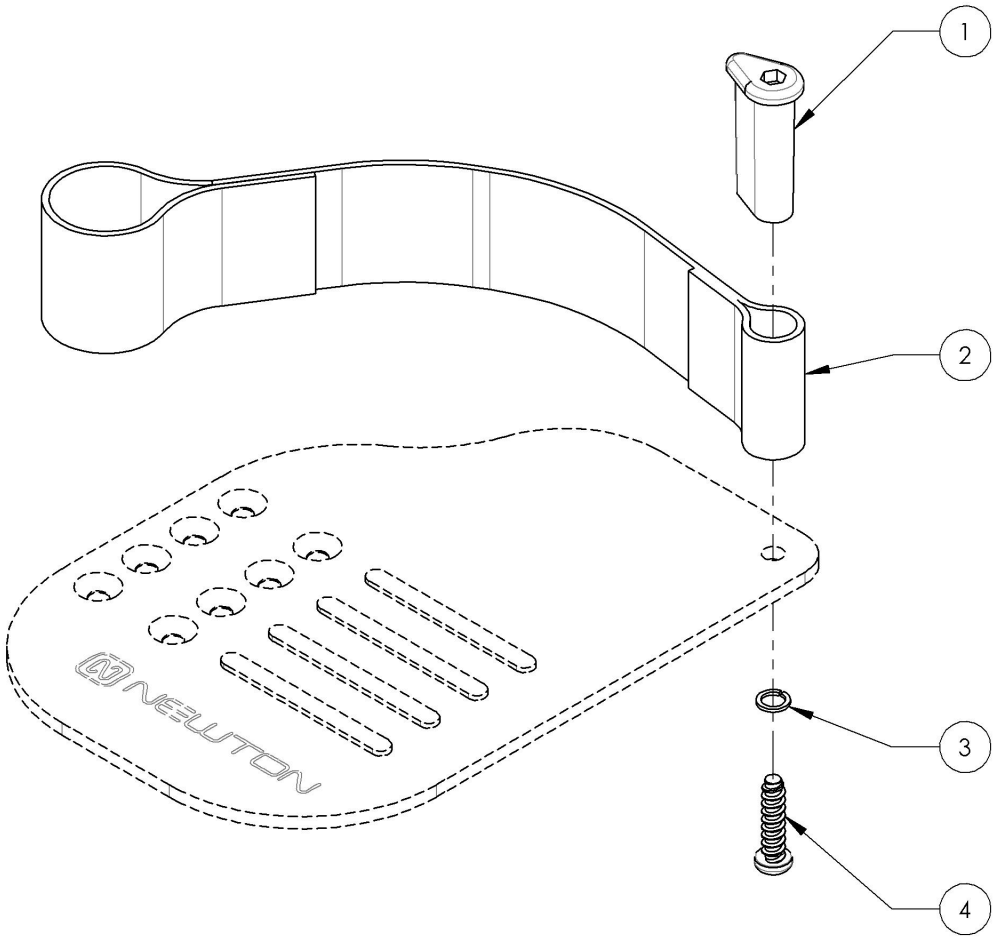

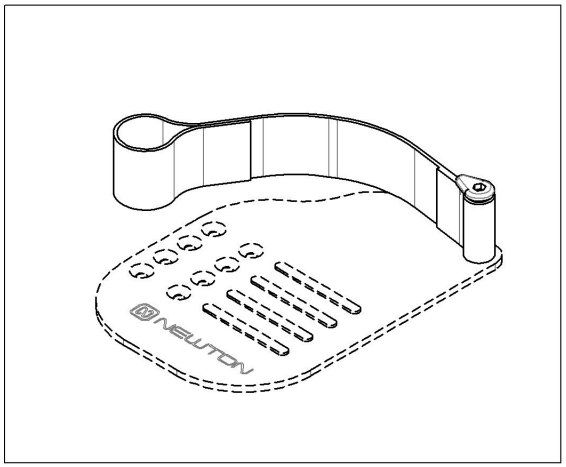

MAKE SURE TO HAVE YOUR SERIAL NUMBER NEARBY WHEN ORDERING PARTS FOR YOUR MOTION COMPOSITES WHEELCHAIR

ITEM NO.	PARTNO	DESCRIPTION	QTY
1	9001753	Bumper - Roller Bumper, Front	1

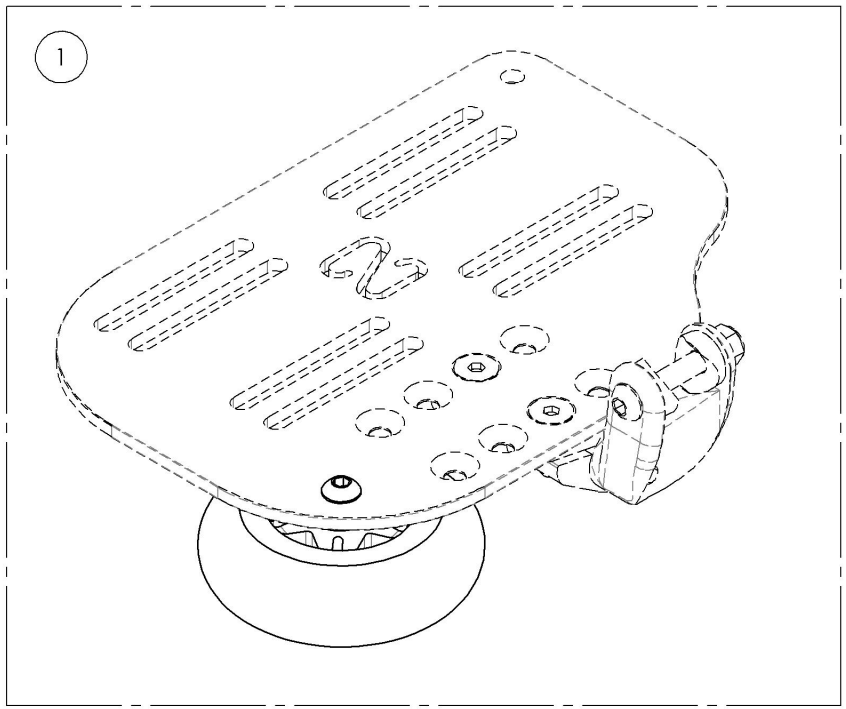

MAKE SURE TO HAVE YOUR SERIAL NUMBER NEARBY WHEN ORDERING PARTS FOR YOUR MOTION COMPOSITES WHEELCHAIR

9001753
Bumper - Roller Bumper, Front

ITEM NO.	PARTNO	DESCRIPTION	9001753 /QTY.
1	22016	3" x 1" STANDARD CASTER	1
2	90666	BUTTON HEAD CAP SCREW M6X1 X 40mm LONG, 24mm THREADED + BLUE THREADLOCKER - BLACK ZINC	1
3	99560	WASHER 1/4 17/64 ID X 1/2 OD X .032 THK	2
4	99512	M6 LOW NYLON LOCK	1

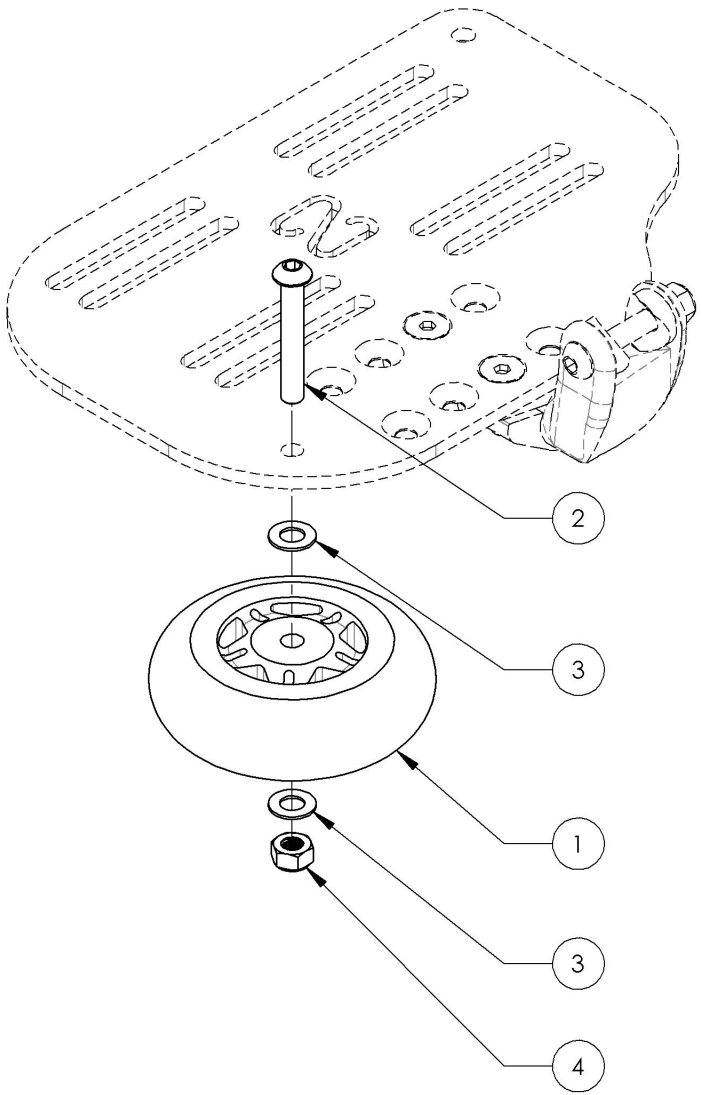

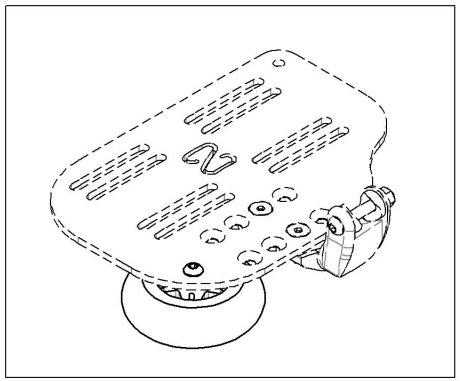

MAKE SURE TO HAVE YOUR SERIAL NUMBER NEARBY WHEN ORDERING PARTS FOR YOUR MOTION COMPOSITES WHEELCHAIR

ITEM NO.	PARTNO	DESCRIPTION	QTY.
1	9007665	Footplate - Carbon, One Piece, 6 x 5½ in (Wheelchair Width: 14 to 16 in)	1
2	9007666	Footplate - Carbon, One Piece, 8 x 5½ in (Wheelchair Width: 17 to 18 in)	1
3	9007667	Footplate - Carbon, One Piece, 10 x 5½ in (Wheelchair Width: 19 to 22 in)	1
4	9007668	Footplate - Carbon, One Piece, 12 x 5½ in (Wheelchair Width: 19 to 22 in)	1
5	9007660	Footplate - Aluminum, One Piece, 4 x 5½ in (For Special Config Only)	1
6	9007661	Footplate - Aluminum, One Piece, 6 x 5½ in (Wheelchair Width: 14 to 16 in)	1
7	9007662	Footplate - Aluminum, One Piece, 8 x 5½ in (Wheelchair Width: 17 to 18 in)	1
8	9007663	Footplate - Aluminum, One Piece, 10 x 5½ in (Wheelchair Width: 19 to 22 in)	1
9	9007664	Footplate - Aluminum, One Piece, 12 x 5½ in (Wheelchair Width: 12 to 13 in)	1

ONE PIECE CARBON FOOTPLATES

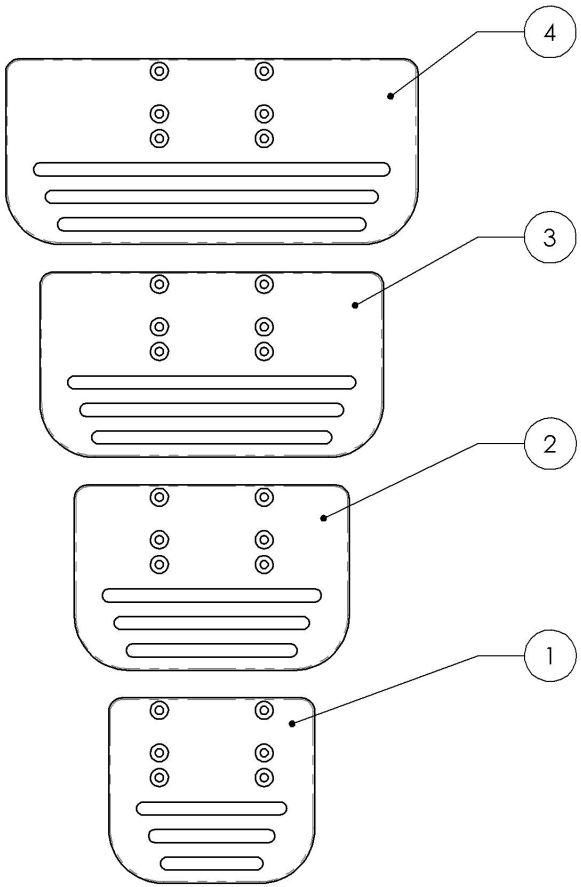

ONE PIECE ALUMINUM FOOTPLATES

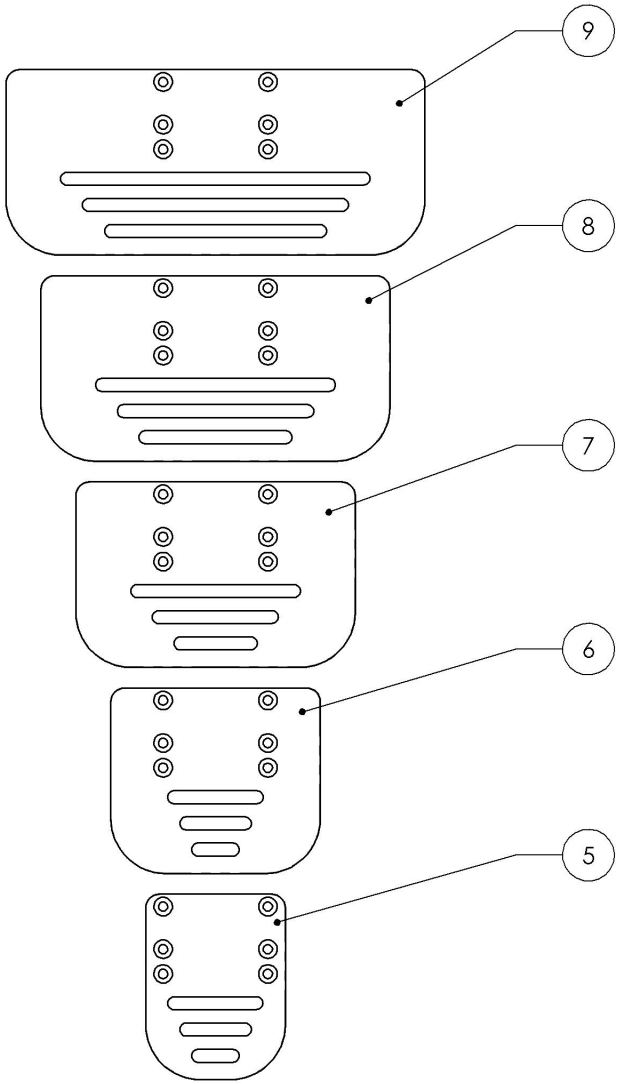

MAKE SURE TO HAVE YOUR SERIAL NUMBER NEARBY WHEN ORDERING PARTS FOR YOUR MOTION COMPOSITES WHEELCHAIR

Footrests Catalogue
Flip-Up One Piece Footplate Structure

ITEM NO.	PARTNO	DESCRIPTION	QTY
1	9001380	Extension - Flip-Up One Piece Footplate	1
2	9007669	Base Tube - Flip-up One Piece Footplate	1

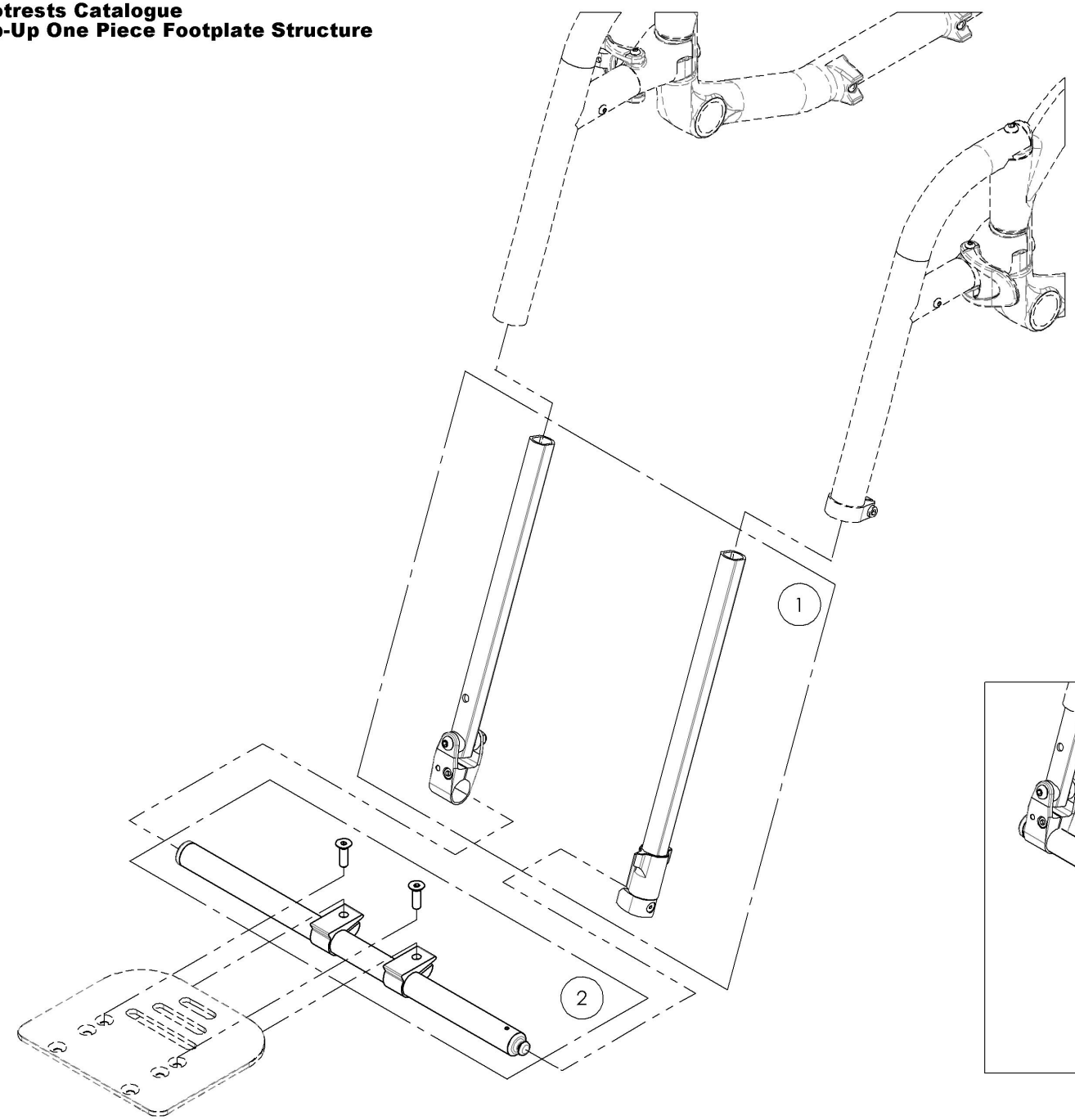

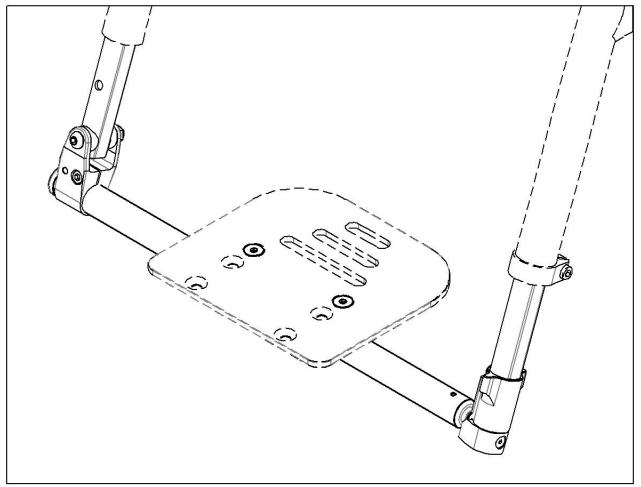

MAKE SURE TO HAVE YOUR SERIAL NUMBER NEARBY WHEN ORDERING PARTS FOR YOUR MOTION COMPOSITES WHEELCHAIR

9001380
Extension - Flip-Up One Piece Footplate

ITEM NO.	PARTNO	DESCRIPTION	9001380 /QTY.
1	31570	V2 PF PIVOT SIDE LONG EXTENSION TUBE - ASSEMBLY	1
2	31571	V2 PF ANCHOR SIDE LONG EXTENSION TUBE - ASSEMBLY	1

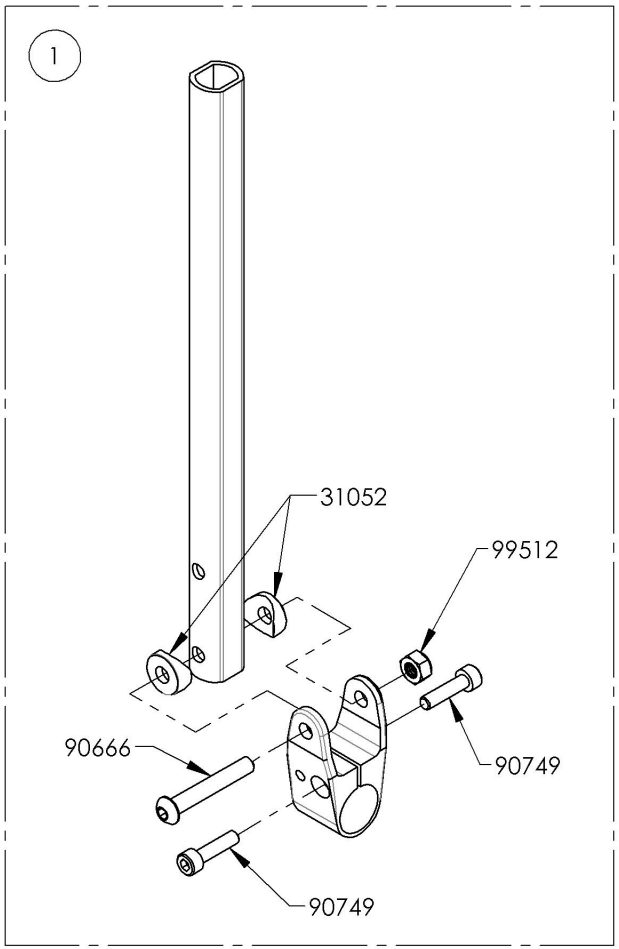

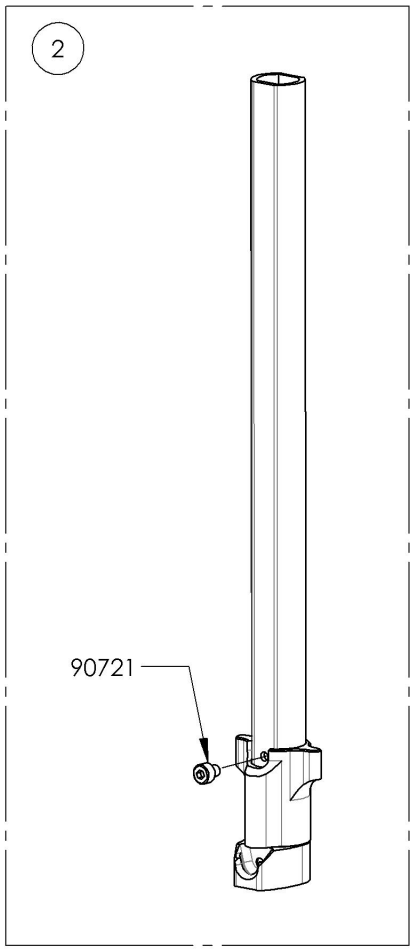

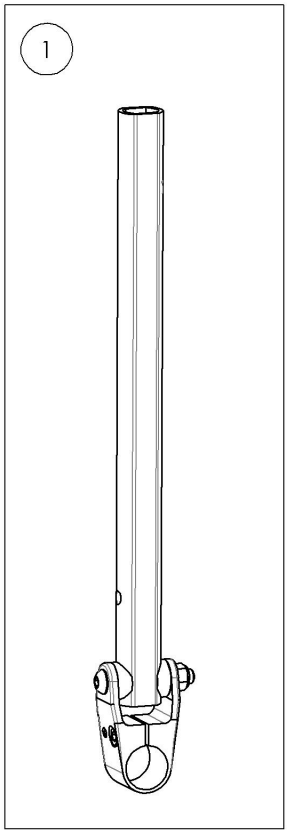

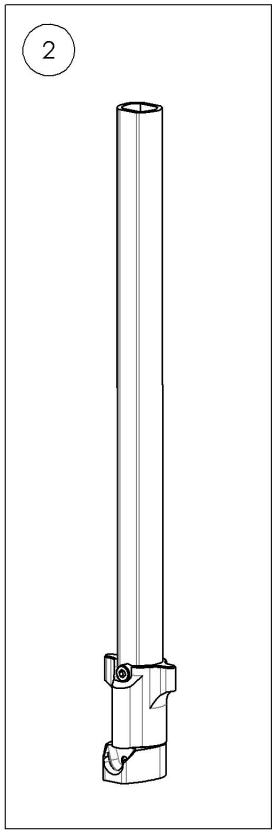

MAKE SURE TO HAVE YOUR SERIAL NUMBER NEARBY WHEN ORDERING PARTS FOR YOUR MOTION COMPOSITES WHEELCHAIR

9007669
Base Tube - Flip-up One Piece Footplate

ITEM NO.	PARTNO	DESCRIPTION	9007669 /QTY.
1	31561	V2 20-1_2" PF MAIN TUBE - ASSEMBLY	1
2	31116	ANGLE ADJUSTABLE FOOTPLATE CLAMP	2
3	90868	FLAT HEAD CAP SCREW M6X1 X 20mm LONG, FULLY THREADED + BLUE THREADLOCKER - BLACK ZINC	2

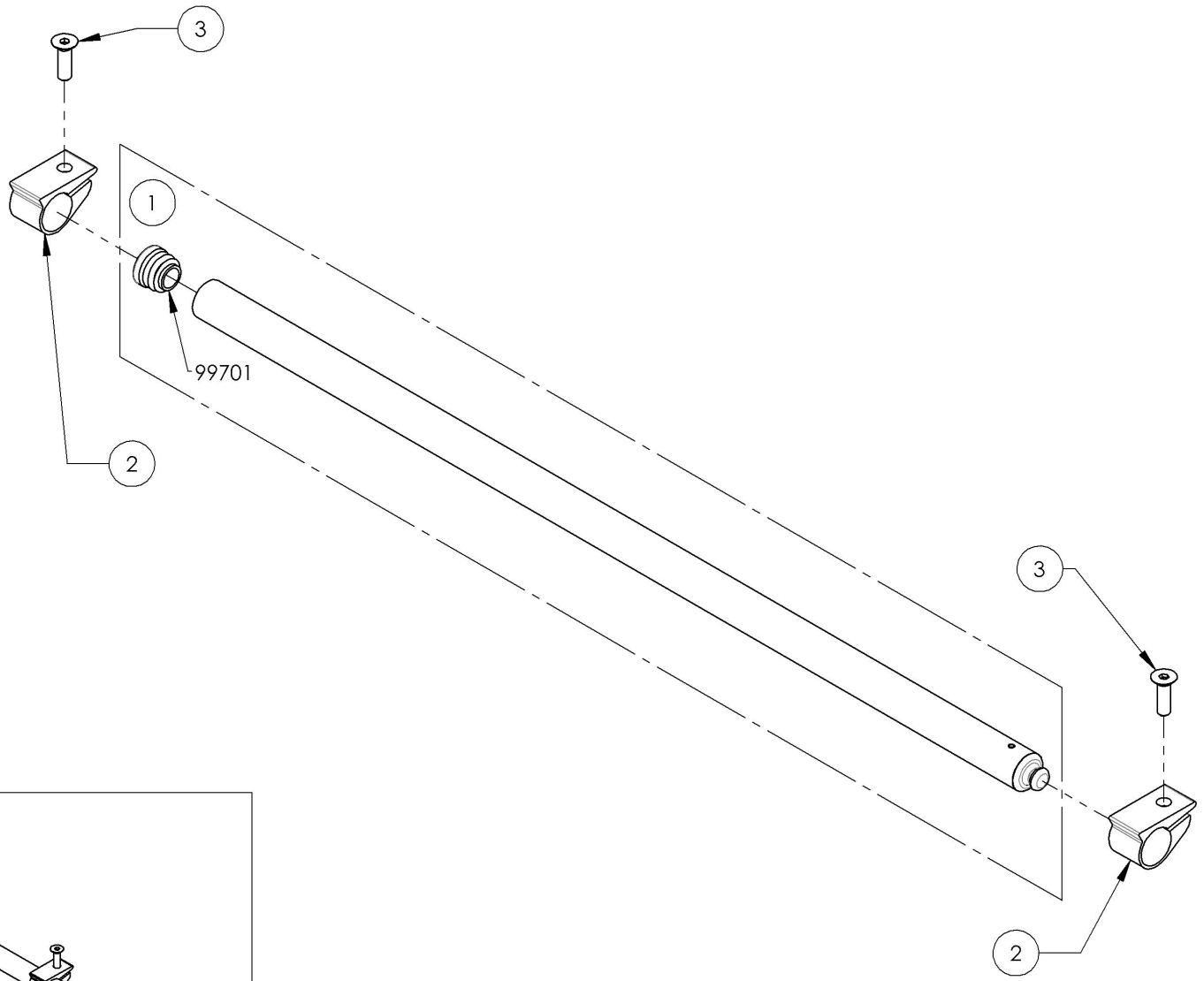

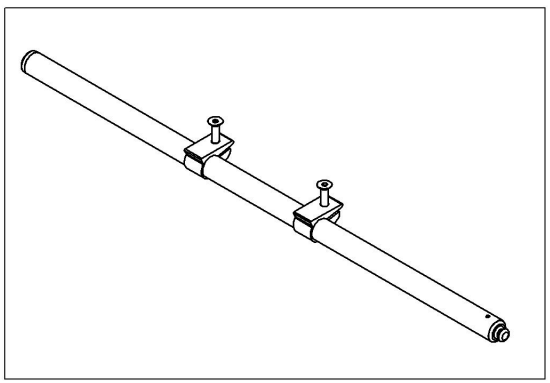

MAKE SURE TO HAVE YOUR SERIAL NUMBER NEARBY WHEN ORDERING PARTS FOR YOUR MOTION COMPOSITES WHEELCHAIR

ITEM NO.	PARTNO	DESCRIPTION	QTY.
1	9001343	Footrest - Swing-In/Swing-Out, Front Mount, Right, 90° - Black	1
2	9001344	Footrest - Swing-In/Swing-Out, Front Mount, Left, 90° - Black	1
3	9001345	Footrest - Swing-In/Swing-Out, Front Mount, Right, 90° (Specify Color)	1
4	9001346	Footrest - Swing-In/Swing-Out, Front Mount, Left, 90° (Specify Color)	1
5	9001347	Footrest - No Extension, Front Mount, 90° (7½ - 11 in) (19 - 28 cm)	1
6	9001348	Footrest - Extension, Front Mount, 90° (9½ - 13 in) (24 - 33 cm)	1
7	9001349	Footrest - Extension, Front Mount, 90° (9½ - 14½ in) (24 - 36,8 cm)	1

FRONT MOUNT STRUCTURES

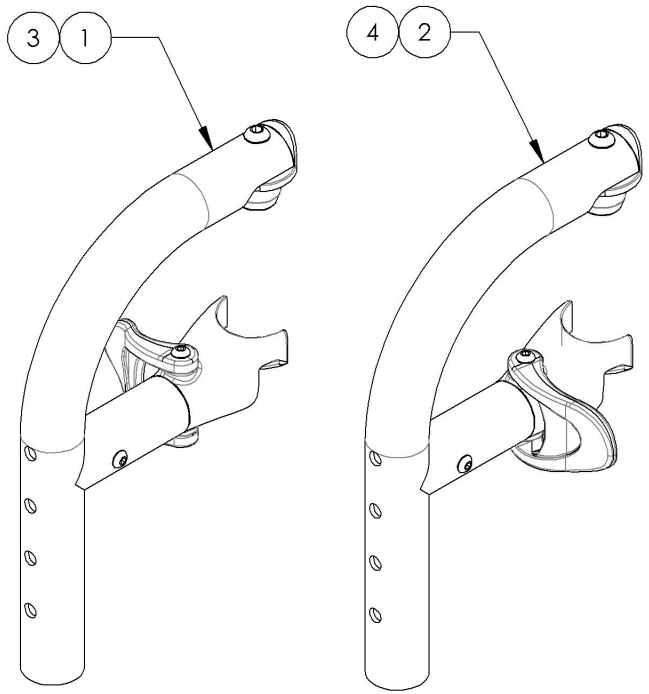

FRONT MOUNT EXTENSION OPTIONS

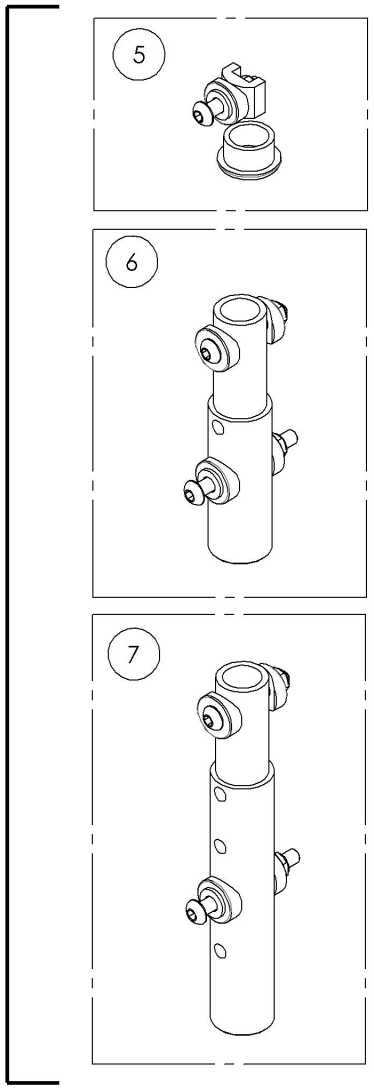

MAKE SURE TO HAVE YOUR SERIAL NUMBER NEARBY WHEN ORDERING PARTS FOR YOUR MOTION COMPOSITES WHEELCHAIR

9001343
Footrest - Swing-In/Swing-Out, Front Mount, Right, 90° - Black

ITEM NO.	PARTNO	DESCRIPTION	9001343 /QTY.
1	31551	V2 FOOTREST PIVOT - ASSEMBLY	1
2	31550	V2 FOOTREST HOUSING RIGHT - ASSEMBLY	1

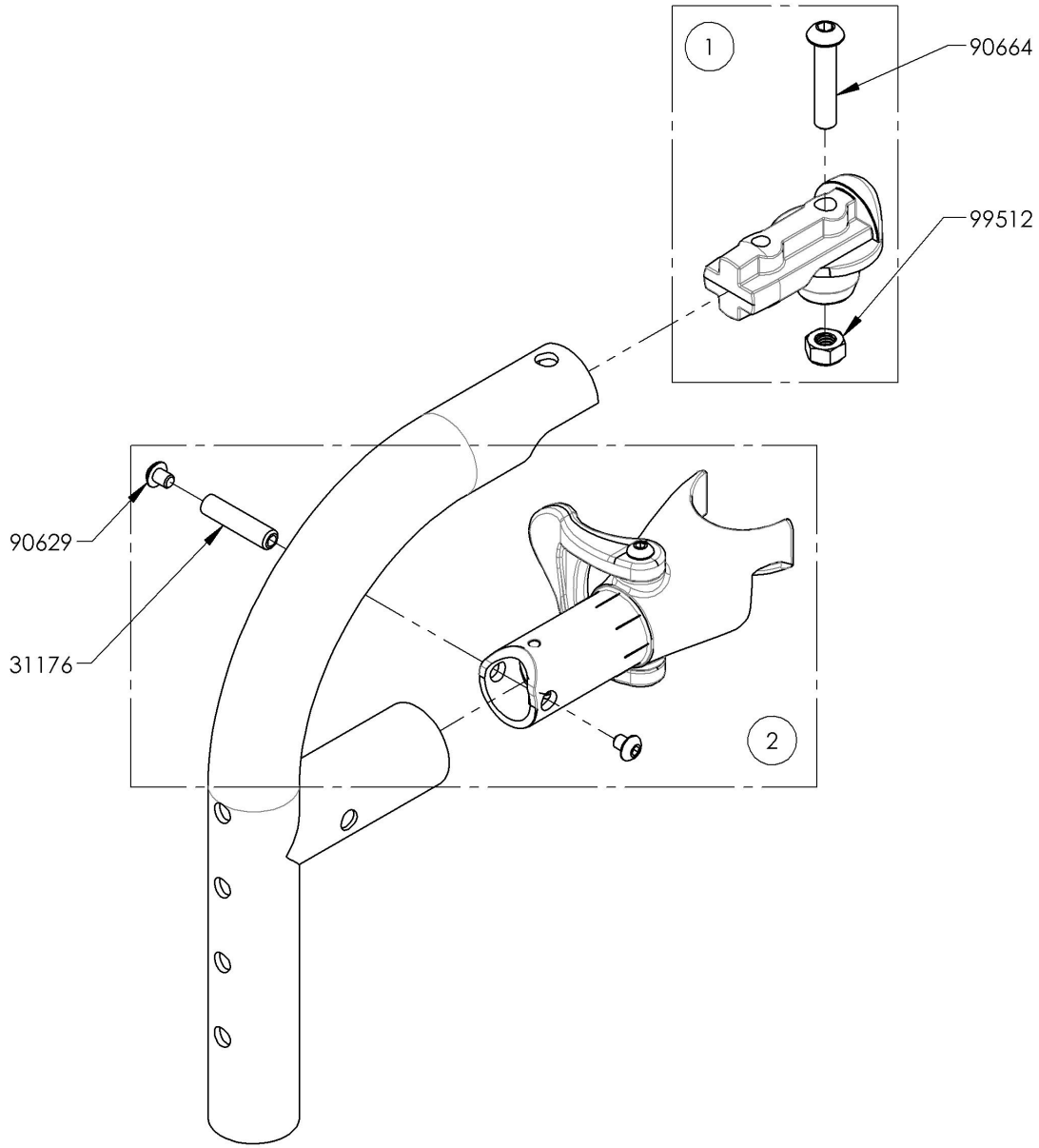

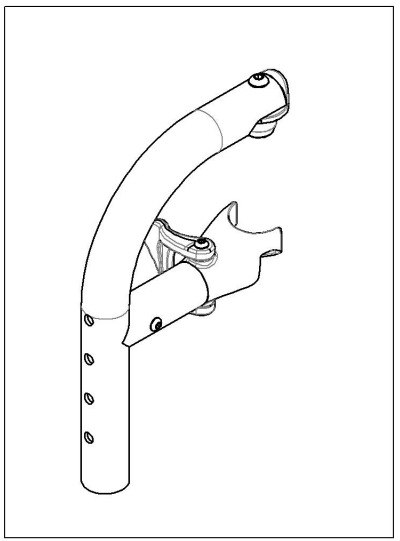

MAKE SURE TO HAVE YOUR SERIAL NUMBER NEARBY WHEN ORDERING PARTS FOR YOUR MOTION COMPOSITES WHEELCHAIR

9001344
Footrest - Swing-In/Swing-Out, Front Mount, Left, 90˚ - Black

ITEM NO.	PARTNO	DESCRIPTION	9001344 /QTY.
1	31551	V2 FOOTREST PIVOT - ASSEMBLY	1
2	31549	V2 FOOTREST HOUSING LEFT - ASSEMBLY	1

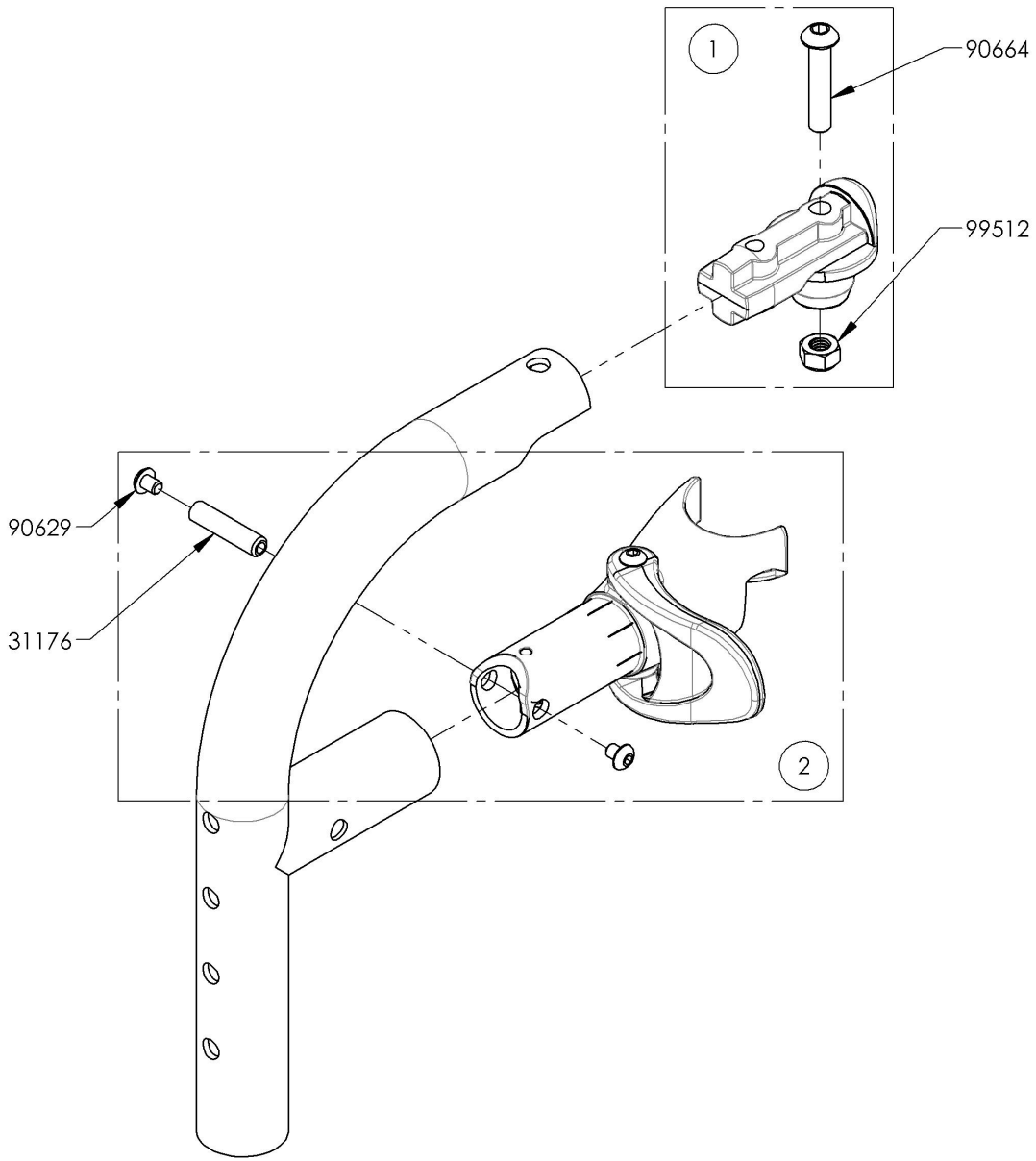

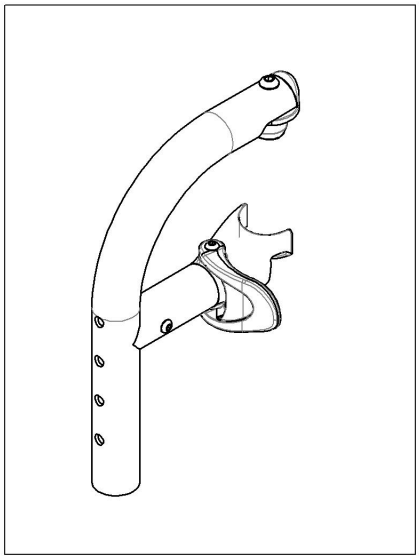

MAKE SURE TO HAVE YOUR SERIAL NUMBER NEARBY WHEN ORDERING PARTS FOR YOUR MOTION COMPOSITES WHEELCHAIR

9001345
Footrest - Swing-In/Swing-Out, Front Mount, Right, 90˚ (Specify Color)

ITEM NO.	PARTNO	DESCRIPTION	9001345 /QTY.
1	31210	V2 FOOTREST 90° DIRECT MOUNT STRUCTURE	1
2	31551	V2 FOOTREST PIVOT - ASSEMBLY	1
3	31550	V2 FOOTREST HOUSING RIGHT - ASSEMBLY	1

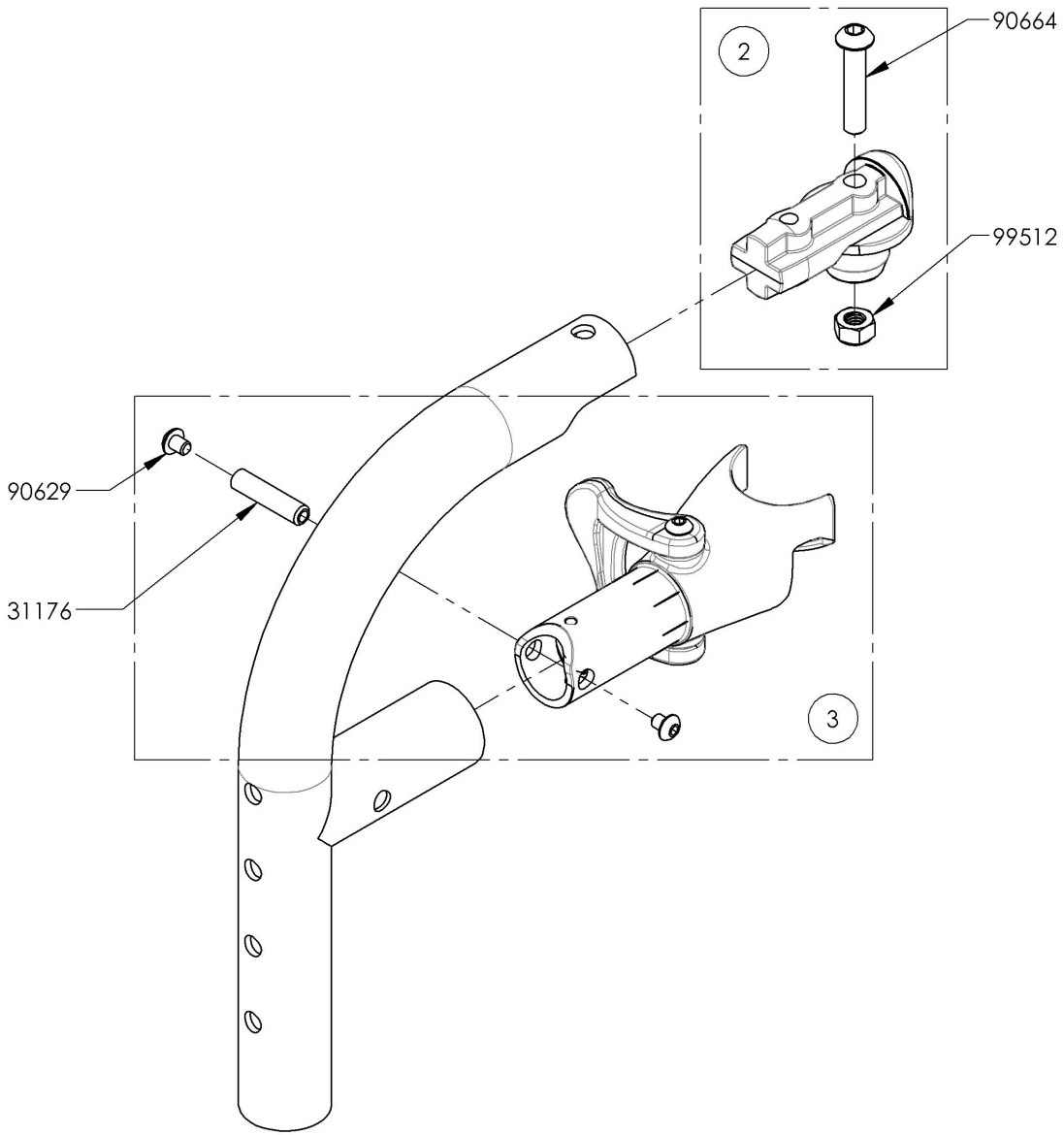

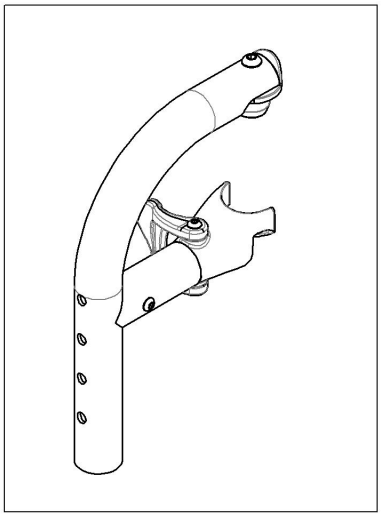

MAKE SURE TO HAVE YOUR SERIAL NUMBER NEARBY WHEN ORDERING PARTS FOR YOUR MOTION COMPOSITES WHEELCHAIR

9001346
Footrest - Swing-In/Swing-Out, Front Mount, Left, 90˚ (Specify Color)

ITEM NO.	PARTNO	DESCRIPTION	9001346 /QTY.
1	31551	V2 FOOTREST PIVOT - ASSEMBLY	1
2	31549	V2 FOOTREST HOUSING LEFT - ASSEMBLY	1

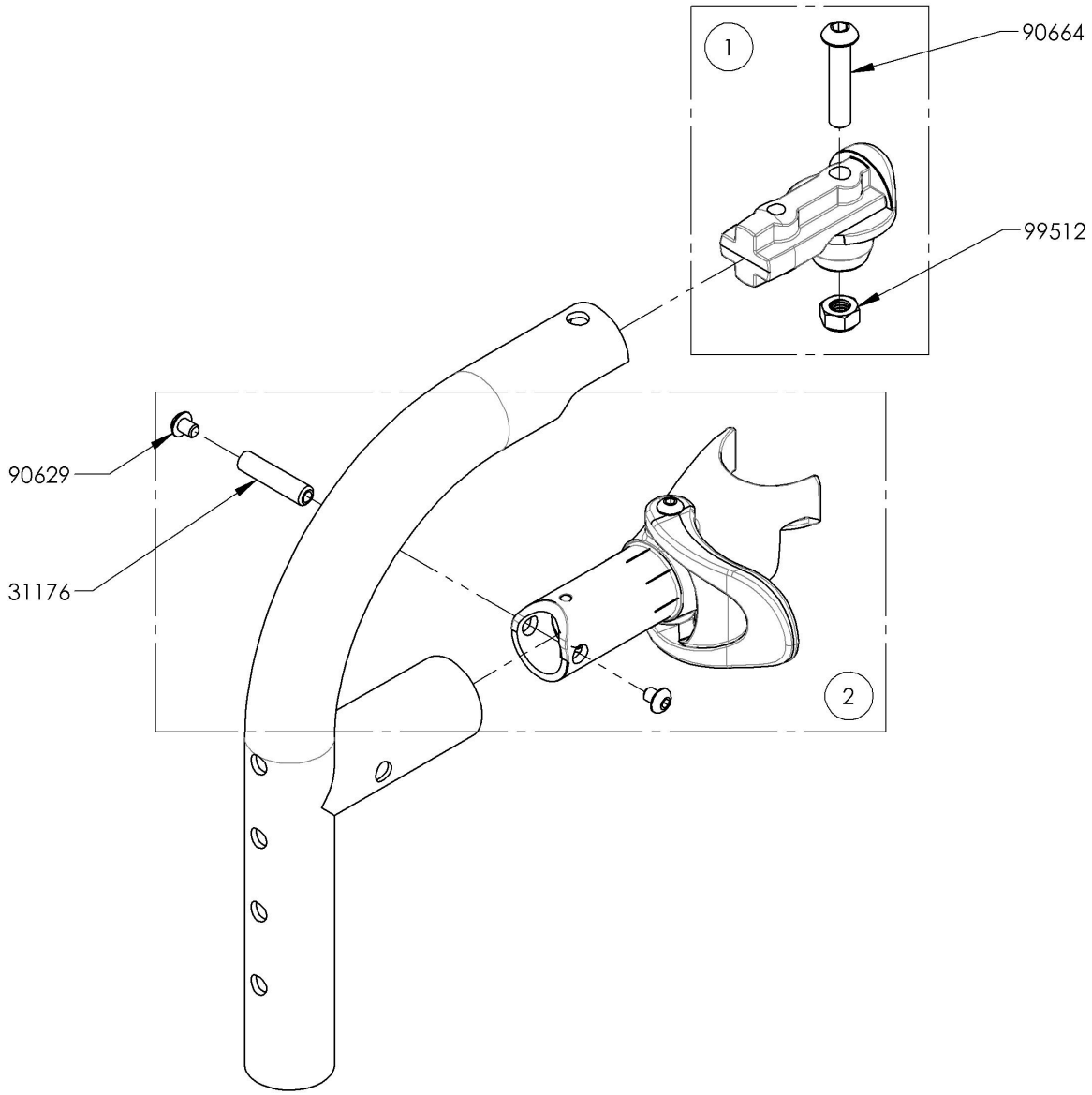

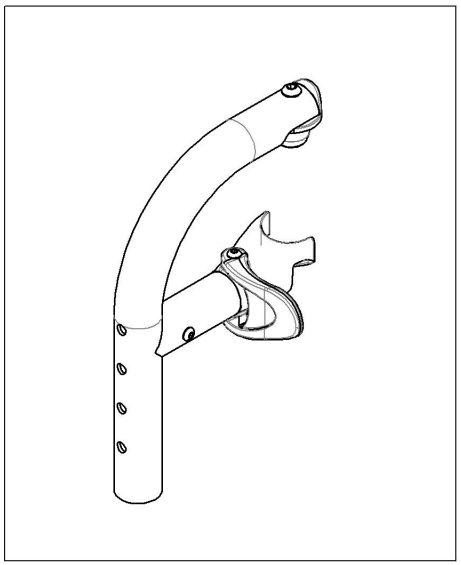

MAKE SURE TO HAVE YOUR SERIAL NUMBER NEARBY WHEN ORDERING PARTS FOR YOUR MOTION COMPOSITES WHEELCHAIR

9001347
Footrest - No Extension, Front Mount, 90˚ (7½ - 11 in) (19 - 28 cm)

ITEM NO.	PARTNO	DESCRIPTION	9001347 /QTY.
1	99702	CAP 1 IN ALU	1
2	31213	FOOTREST DIRECT MOUNT NUT HOLDER	1
3	99512	M6 LOW NYLON LOCK	1
4	33068	M6 COVED WASHER FOR 1" TUBE	1
5	99562	WASHER 1/4 17/64 ID X 5/8 OD X .062 THK	1
6	90664	BUTTON HEAD CAP SCREW M6X1 X 30mm LONG, FULLY THREADED + BLUE THREADLOCKER - BLACK ZINC	1

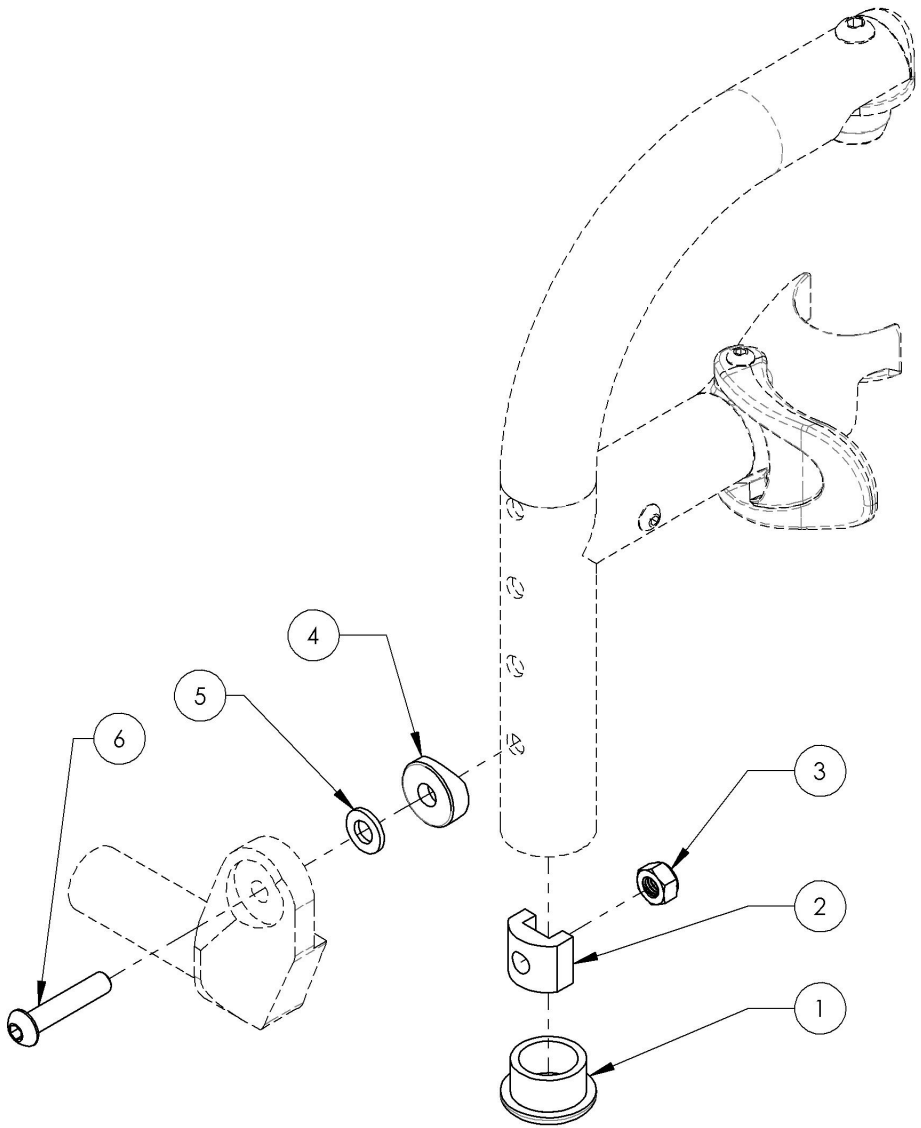

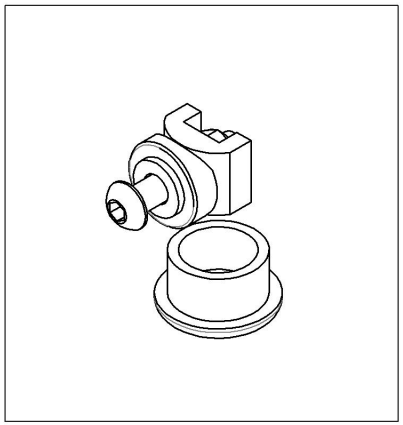

MAKE SURE TO HAVE YOUR SERIAL NUMBER NEARBY WHEN ORDERING PARTS FOR YOUR MOTION COMPOSITES WHEELCHAIR

9001348
Footrest - Extension, Front Mount, 90˚ (9½ - 13 in) (24 - 33 cm)

ITEM NO.	PARTNO	DESCRIPTION	9001348 /QTY.
1	31211	V2 DIRECT MOUNT STRUCTURE SHORT EXTENSION	1
2	33068	M6 COVED WASHER FOR 1" TUBE	4
3	99512	M6 LOW NYLON LOCK	2
4	99560	WASHER 1/4 17/64 ID X 1/2 OD X .032 THK	2
5	90666	BUTTON HEAD CAP SCREW M6X1 X 40mm LONG, 24mm THREADED + BLUE THREADLOCKER - BLACK ZINC	1
6	99562	WASHER 1/4 17/64 ID X 5/8 OD X .062 THK	2
7	90669	BUTTON HEAD CAP SCREW M6X1 X 55mm LONG, 24mm THREADED + BLUE THREADLOCKER - BLACK ZINC	1

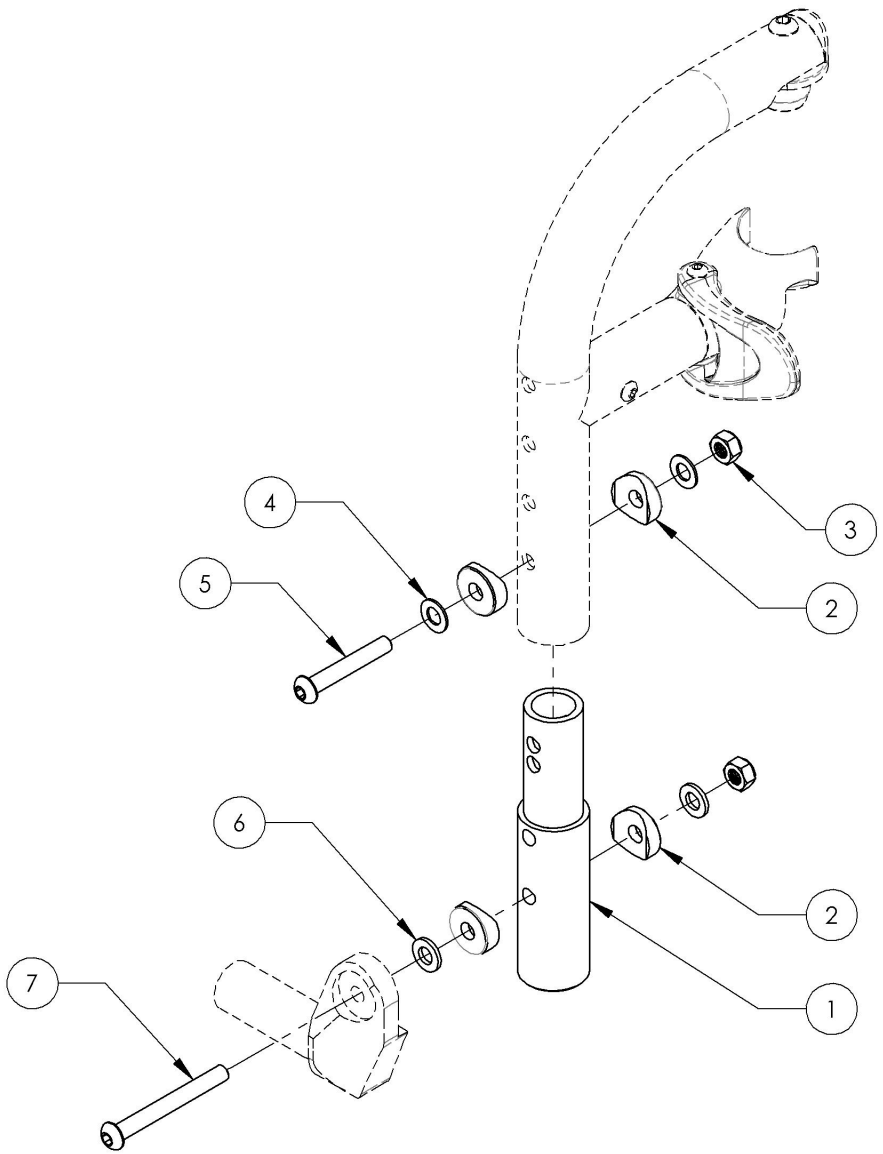

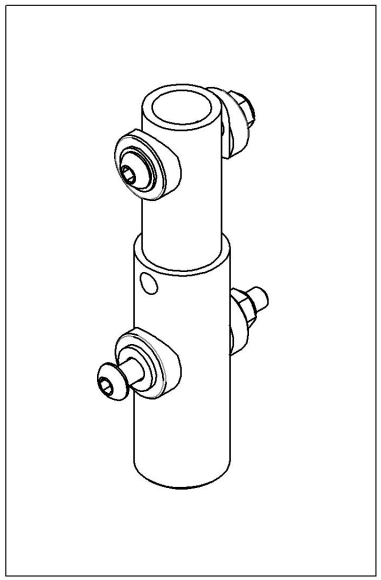

MAKE SURE TO HAVE YOUR SERIAL NUMBER NEARBY WHEN ORDERING PARTS FOR YOUR MOTION COMPOSITES WHEELCHAIR

9001349
Footrest - Extension, Front Mount, 90° (9½ - 14½ in) (24 - 36,8 cm)

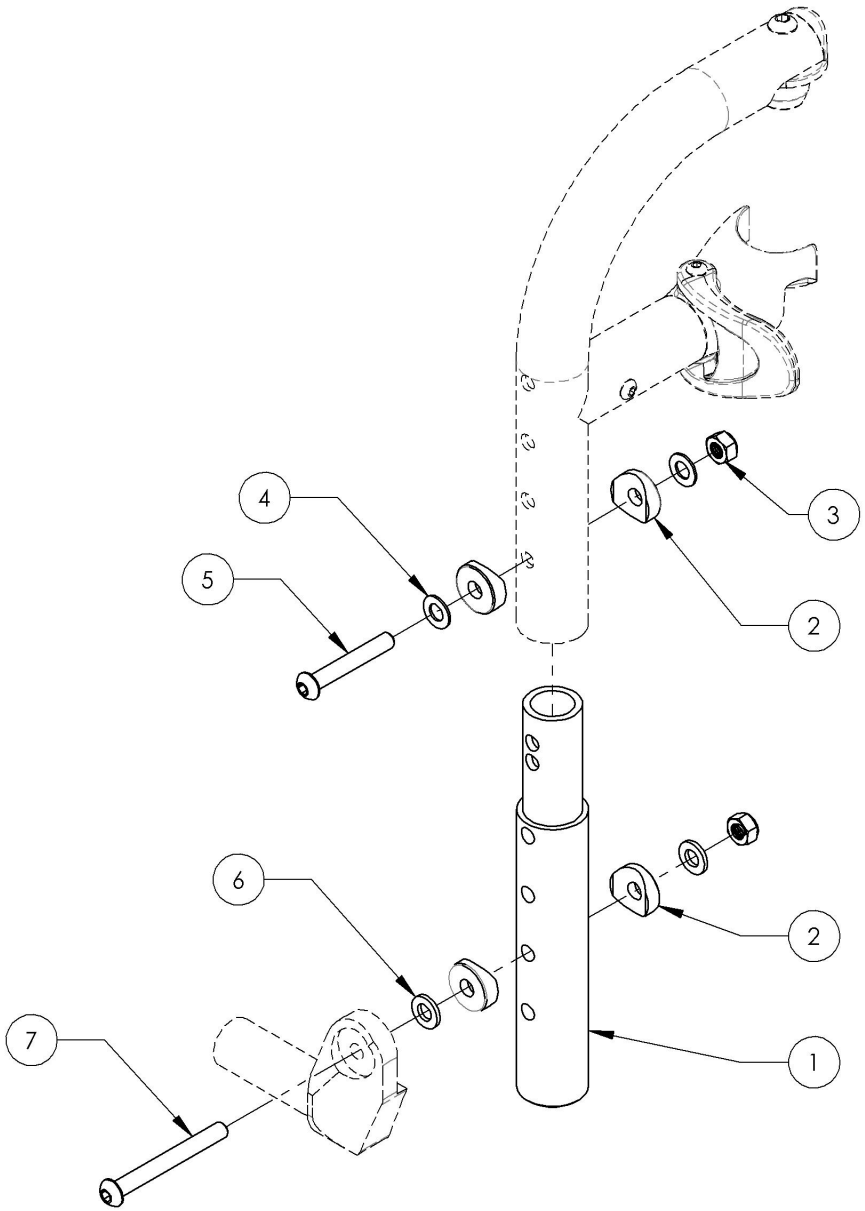

ITEM NO.	PARTNO	DESCRIPTION	9001349 /QTY.
1	31219	V2 DIRECT MOUNT STRUCTURE MEDIUM EXTENSION	1
2	33068	M6 COVED WASHER FOR 1" TUBE	4
3	99512	M6 LOW NYLON LOCK	2
4	99560	WASHER 1/4 17/64 ID X 1/2 OD X .032 THK	2
5	90666	BUTTON HEAD CAP SCREW M6X1 X 40mm LONG, 24mm THREADED + BLUE THREADLOCKER - BLACK ZINC	1
6	99562	WASHER 1/4 17/64 ID X 5/8 OD X .062 THK	2
7	90669	BUTTON HEAD CAP SCREW M6X1 X 55mm LONG, 24mm THREADED + BLUE THREADLOCKER - BLACK ZINC	1

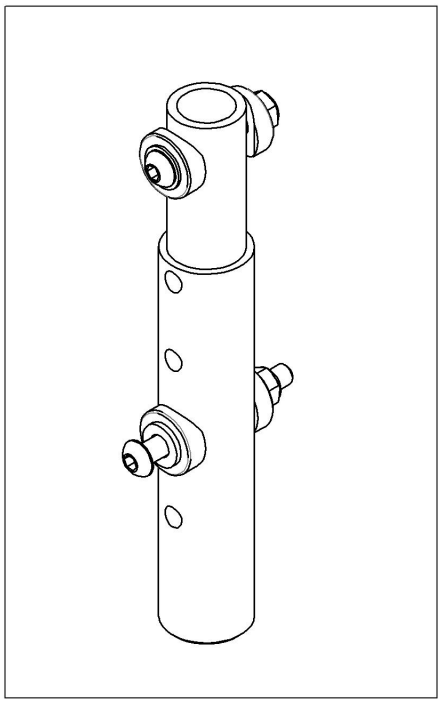

MAKE SURE TO HAVE YOUR SERIAL NUMBER NEARBY WHEN ORDERING PARTS FOR YOUR MOTION COMPOSITES WHEELCHAIR

Footrests Catalogue
Front Mount Footplates

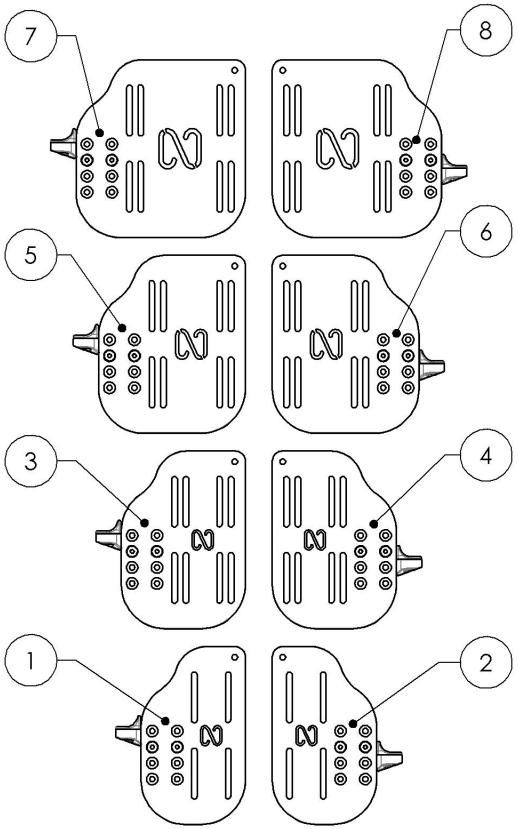

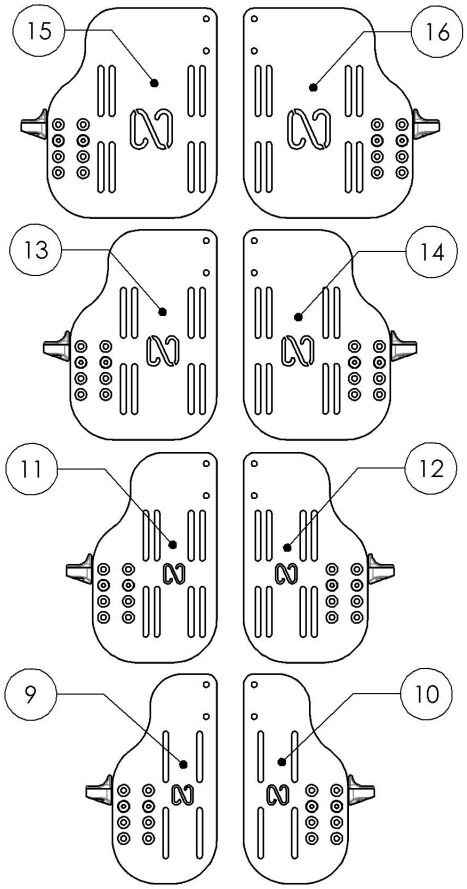

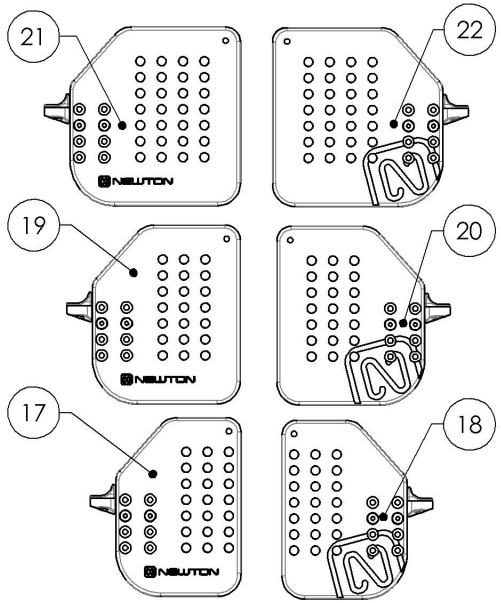

ITEM NO.	PARTNO	DESCRIPTION	QTY
1	9001402	Footplate - Aluminium, Newton Angle Adjustable, Front Mount, Right, 4½ x 8 in (Wheelchair Width: 12 to 13 in)	1
2	9001406	Footplate - Aluminium, Newton Angle Adjustable, Front Mount, Left, 4½ x 8 in (Wheelchair Width: 12 to 13 in)	1
3	9001403	Footplate - Aluminium, Newton Angle Adjustable, Front Mount, Right, 5½ x 8 in (Wheelchair Width: 14 to 16 in)	1
4	9001407	Footplate - Aluminium, Newton Angle Adjustable, Front Mount, Left, 5½ x 8 in (Wheelchair Width: 14 to 16 in)	1
5	9001404	Footplate - Aluminium, Newton Angle Adjustable, Front Mount, Right, 6½ x 8 in (Wheelchair Width: 17 to 18 in)	1
6	9001408	Footplate - Aluminium, Newton Angle Adjustable, Front Mount, Left, 6½ x 8 in (Wheelchair Width: 17 to 18 in)	1
7	9001405	Footplate - Aluminium, Newton Angle Adjustable, Front Mount, Right, 7½ x 8 in (Wheelchair Width: 19 in +)	1
8	9001409	Footplate - Aluminium, Newton Angle Adjustable, Front Mount, Left, 7½ x 8 in (Wheelchair Width: 19 in +)	1
9	9001394	Footplate - Aluminium, Newton Angle Adjustable, Front Mount, Right, 4½ x 9½ in (Wheelchair Width: 12 to 13 in)	1
10	9001396	Footplate - Aluminium, Newton Angle Adjustable, Front Mount, Left, 4½ x 9½ in (Wheelchair Width: 12 to 13 in)	1
11	9001395	Footplate - Aluminium, Newton Angle Adjustable, Front Mount, Right, 5½ x 9½ in (Wheelchair Width: 14 to 16 in)	1
12	9001397	Footplate - Aluminium, Newton Angle Adjustable, Front Mount, Left, 5½ x 9½ in (Wheelchair Width: 14 to 16 in)	1
13	9002865	Footplate - Aluminium, Newton Angle Adjustable, Front Mount, Right 6½ x 9½ in (Wheelchair Width: 17 to 18 in)	1
14	9002867	Footplate - Aluminium, Newton Angle Adjustable, Front Mount, Left 6½ x 9½ in (Wheelchair Width: 17 to 18 in)	1
15	9002866	Footplate - Aluminium, Newton Angle Adjustable, Front Mount, Right 7½ x 9½ in (Wheelchair Width: 19 in +)	1
16	9002868	Footplate - Aluminium, Newton Angle Adjustable, Front Mount, Left 7½ x 9½ in (Wheelchair Width: 19 in +)	1
17	9002859	Footplate - Composite, Newton Angle Adjustable, Front Mount, Right, 5½ x 8 in (Wheelchair Width: 14 to 16 in)	1
18	9002862	Footplate - Composite, Newton Angle Adjustable, Front Mount, Left, 5½ x 8 in (Wheelchair Width: 14 to 16 in)	1
19	9002860	Footplate - Composite, Newton Angle Adjustable, Front Mount, Right, 6½ x 8 in (Wheelchair Width: 17 to 18 in)	1
20	9002863	Footplate - Composite, Newton Angle Adjustable, Front Mount, Left, 6½ x 8 in (Wheelchair Width: 17 to 18 in)	1
21	9002861	Footplate - Composite, Newton Angle Adjustable, Front Mount, Right, 7½ x 8 in (Wheelchair Width: 19 in +)	1
22	9002864	Footplate - Composite, Newton Angle Adjustable, Front Mount, Left, 7½ x 8 in (Wheelchair Width: 19 in +)	1
23	9001411	Heel Loop - Length Adjustable	1

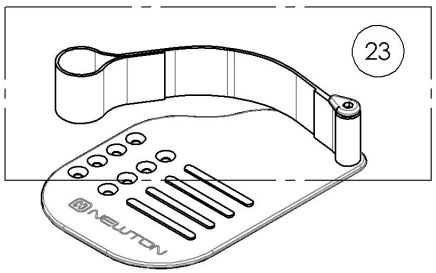

MAKE SURE TO HAVE YOUR SERIAL NUMBER NEARBY WHEN ORDERING PARTS FOR YOUR MOTION COMPOSITES WHEELCHAIR

9001402_9001405
Footplate - Aluminum, Newton, Angle adjustable, For Front Mount, Right, 8 in Depth

ITEM NO.	PARTNO	DESCRIPTION	9001402 /QTY.	9001403 /QTY.	9001404 /QTY.	9001405 /QTY.
1	31124	ADJUSTABLE NEWTON ALU FOOTPLATE 4.5 x 8 in, RIGHT (WHEELCHAIR WIDTH 12-13 in)	1	-	-	-
2	31118	ADJUSTABLE NEWTON ALU FOOTPLATE 5.5 x 8 in, RIGHT (WHEELCHAIR WIDTH 14-16 in)	-	1	-	-
3	31120	ADJUSTABLE NEWTON ALU FOOTPLATE 6.5 x 8 in, RIGHT (WHEELCHAIR WIDTH 17-18 in)	-	-	1	-
4	31122	ADJUSTABLE NEWTON ALU FOOTPLATE 7.5 x 8 in, RIGHT (WHEELCHAIR WIDTH 19 in +)	-	-	-	1
5	31116	ANGLE ADJUSTABLE FOOTPLATE CLAMP	2	2	2	2
6	31112	DIRECT MOUNT ANGLE AJUSTABLE FOOTPLATE RIGHT PIVOT	1	1	1	1
7	90868	FLAT HEAD CAP SCREW M6X1 X 20mm LONG, FULLY THREADED + BLUE THREADLOCKER - BLACK ZINC	2	2	2	2

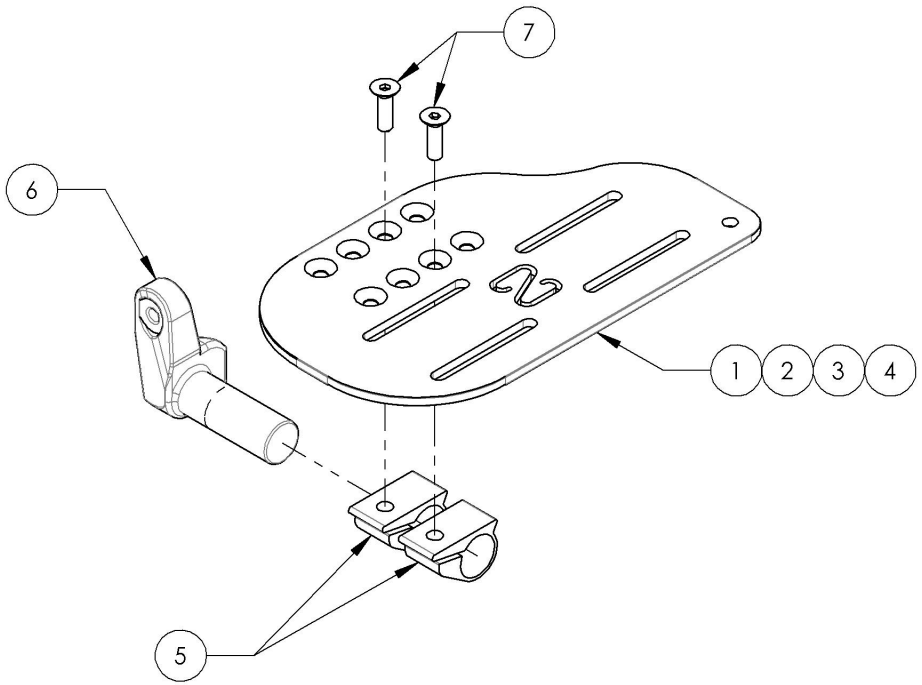

9001402
Footplate - Aluminium, Newton Angle Adjustable, Front Mount, Right, 4½ x 8 in (Wheelchair Width: 12 to 13 in)

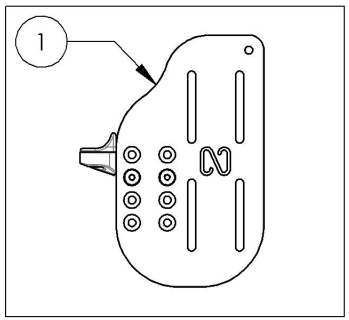

9001403
Footplate - Aluminium, Newton Angle Adjustable, Front Mount, Right, 5½ x 8 in (Wheelchair Width: 14 to 16 in)

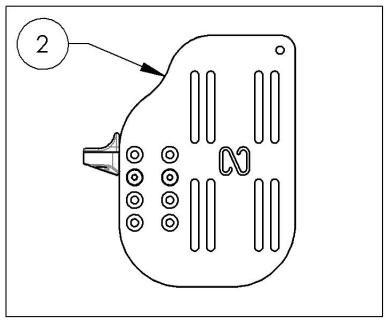

9001404
Footplate - Aluminium, Newton Angle Adjustable, Front Mount, Right, 6½ x 8 in (Wheelchair Width: 17 to 18 in)

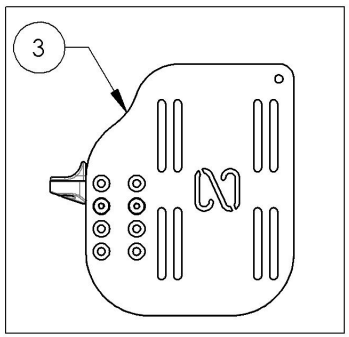

9001405
Footplate - Aluminium, Newton Angle Adjustable, Front Mount, Right, 7½ x 8 in (Wheelchair Width: 19 in +)

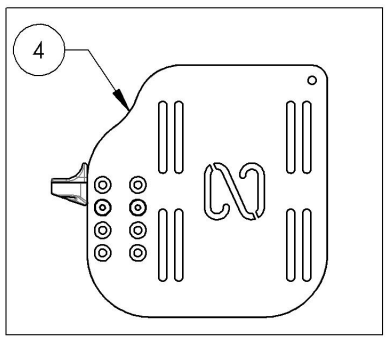

MAKE SURE TO HAVE YOUR SERIAL NUMBER NEARBY WHEN ORDERING PARTS FOR YOUR MOTION COMPOSITES WHEELCHAIR

9001406_9001409
Footplate - Aluminum, Newton, Angle Adjustable, For Front Mount, Left, 8 in Depth

ITEM NO.	PARTNO	DESCRIPTION	9001406 /QTY.	9001407 /QTY.	9001408 /QTY.	9001409 /QTY.
1	31123	ADJUSTABLE NEWTON ALU FOOTPLATE 4.5 x 8 in, LEFT (WHEELCHAIR WIDTH 12-13 in)	1	-	-	-
2	31117	ADJUSTABLE NEWTON ALU FOOTPLATE 5.5 x 8 in, LEFT (WHEELCHAIR WIDTH 14-16 in)	-	1	-	-
3	31119	ADJUSTABLE NEWTON ALU FOOTPLATE 6.5 x 8 in, LEFT (WHEELCHAIR WIDTH 17-18 in)	-	-	1	-
4	31121	ADJUSTABLE NEWTON ALU FOOTPLATE 7.5 x 8 in, LEFT (WHEELCHAIR WIDTH 19 in +)	-	-	-	1
5	31116	ANGLE ADJUSTABLE FOOTPLATE CLAMP	2	2	2	2
6	31113	DIRECT MOUNT ANGLE AJUSTABLE FOOTPLATE LEFT PIVOT	1	1	1	1
7	90868	FLAT HEAD CAP SCREW M6X1 X 20mm LONG, FULLY THREADED + BLUE THREADLOCKER - BLACK ZINC	2	2	2	2

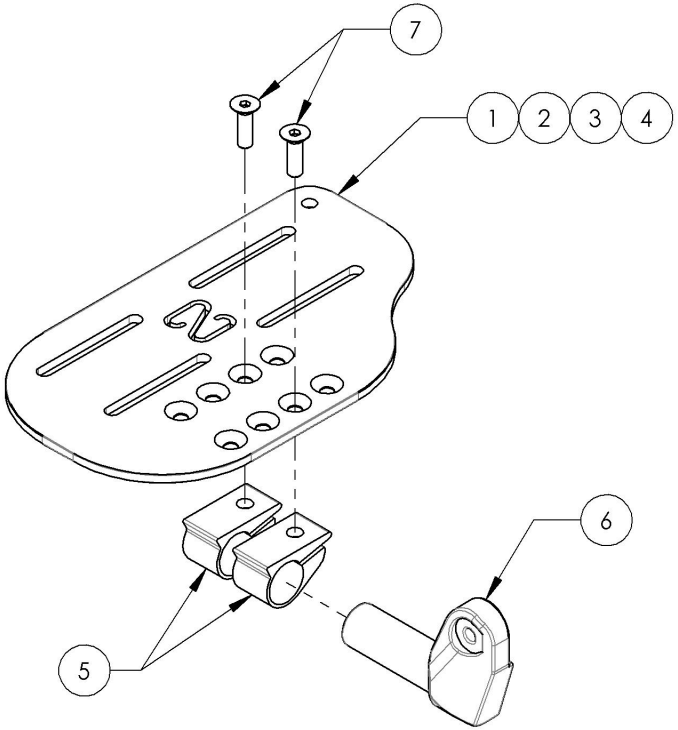

9001406
Footplate - Aluminium, Newton Angle Adjustable, Front Mount, Left, 4½ x 8 in (Wheelchair Width: 12 to 13 in)

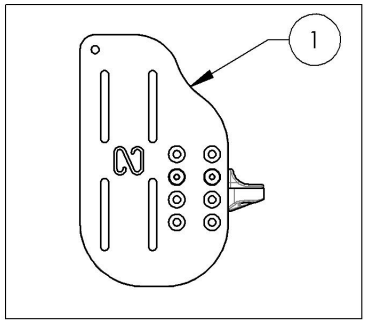

9001407
Footplate - Aluminium, Newton Angle Adjustable, Front Mount, Left, 5½ x 8 in (Wheelchair Width: 14 to 16 in)

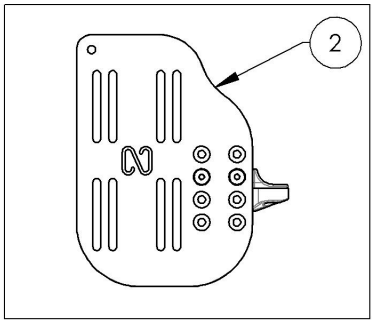

9001408
Footplate - Aluminium, Newton Angle Adjustable, Front Mount, Left, 6½ x 8 in (Wheelchair Width: 17 to 18 in)

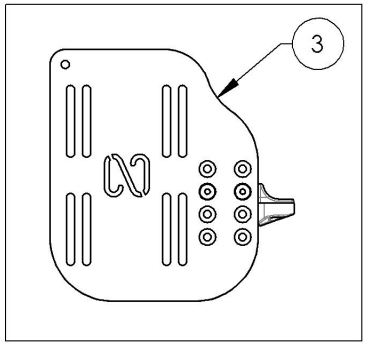

9001409
Footplate - Aluminium, Newton Angle Adjustable, Front Mount, Left, 7½ x 8 in (Wheelchair Width: 19 in +)

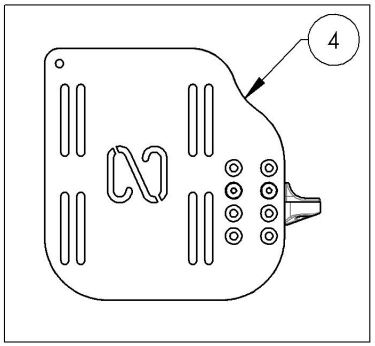

MAKE SURE TO HAVE YOUR SERIAL NUMBER NEARBY WHEN ORDERING PARTS FOR YOUR MOTION COMPOSITES WHEELCHAIR

9001394_9001395 & 9002865_9002866
Footplate - Aluminium, Newton Angle Adjustable, Front Mount, Right, 9½ in Depth

ITEM NO.	PARTNO	DESCRIPTION	9001394 /QTY.	9001395 /QTY.	9002865 /QTY.	9002866 /QTY.
1	31126	ADJUSTABLE NEWTON ALU FOOTPLATE 4.5 x 9.5 in, RIGHT (WHEELCHAIR WIDTH 12-13 in)	1	-	-	-
2	31137	ADJUSTABLE NEWTON ALU FOOTPLATE 5.5 x 9.5 in, RIGHT (WHEELCHAIR WIDTH 14-16 in)	-	1	-	-
3	31190	ADJUSTABLE NEWTON ALU FOOTPLATE 6.5 x 9.5 in, RIGHT (WHEELCHAIR WIDTH 17-18 in)	-	-	1	-
4	31192	ADJUSTABLE NEWTON ALU FOOTPLATE 7.5 x 9.5 in, RIGHT (WHEELCHAIR WIDTH 19 in +)	-	-	-	1
5	31112	DIRECT MOUNT ANGLE AJUSTABLE FOOTPLATE RIGHT PIVOT	1	1	1	1
6	31116	ANGLE ADJUSTABLE FOOTPLATE CLAMP	2	2	2	2
7	90868	FLAT HEAD CAP SCREW M6X1 X 20mm LONG, FULLY THREADED + BLUE THREADLOCKER - BLACK ZINC	2	2	2	2

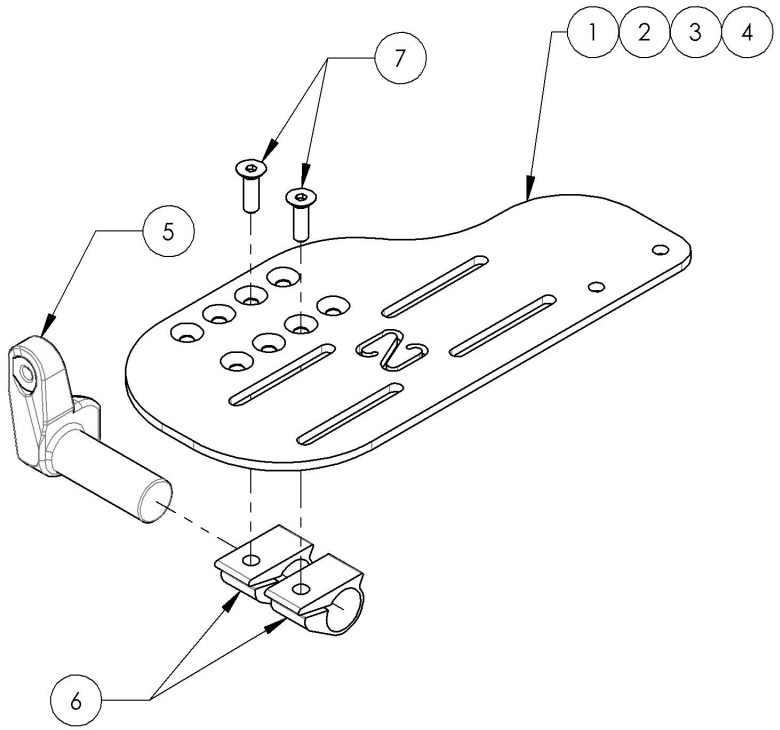

9001394
Footplate - Aluminium, Newton Angle Adjustable, Front Mount, Right, 4½ x 9½ in (Wheelchair Width: 12 to 13 in)

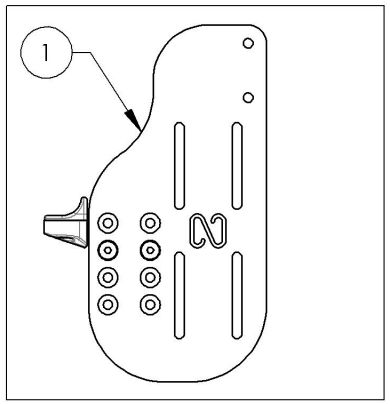

9001395
Footplate - Aluminium, Newton Angle Adjustable, Front Mount, Right, 5½ x 9½ in (Wheelchair Width: 14 to 16 in)

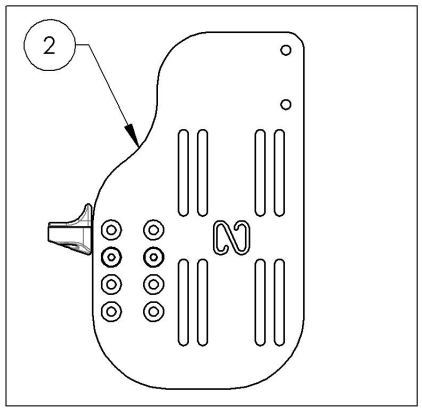

9002865
Footplate - Aluminium, Newton Angle Adjustable, Front Mount, Right 6½ x 9½ in (Wheelchair Width: 17 to 18 in)

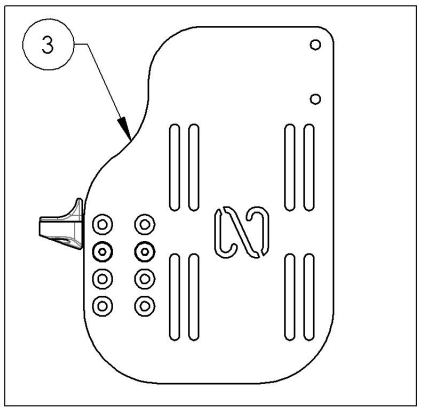

9002866
Footplate - Aluminium, Newton Angle Adjustable, Front Mount, Right 7½ x 9½ in (Wheelchair Width: 19 in +)

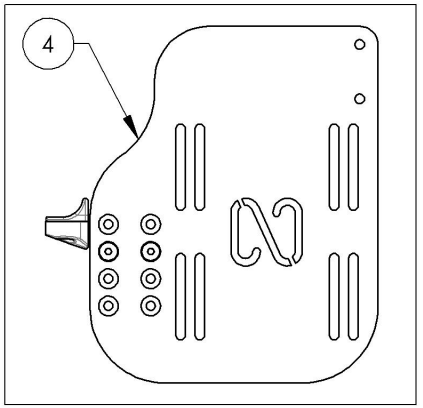

MAKE SURE TO HAVE YOUR SERIAL NUMBER NEARBY WHEN ORDERING PARTS FOR YOUR MOTION COMPOSITES WHEELCHAIR

9001396_9001397 & 9002867_9002868
Footplate - Aluminium, Newton Angle Adjustable, Front Mount, Left, 9½ in Depth

ITEM NO.	PARTNO	DESCRIPTION	9001396 /QTY.	9001397 /QTY.	9002867 /QTY.	9002868 /QTY.
1	31125	ADJUSTABLE NEWTON ALU FOOTPLATE 4.5 x 9.5 in, LEFT (WHEELCHAIR WIDTH 12-13 in)	1	-	-	-
2	31136	ADJUSTABLE NEWTON ALU FOOTPLATE 5.5 x 9.5 in, LEFT (WHEELCHAIR WIDTH 14-16 in)	-	1	-	-
3	31191	ADJUSTABLE NEWTON ALU FOOTPLATE 6.5 x 9.5 in, LEFT (WHEELCHAIR WIDTH 17-18 in)	-	-	1	-
4	31193	ADJUSTABLE NEWTON ALU FOOTPLATE 7.5 x 9.5 in, LEFT (WHEELCHAIR WIDTH 19 in +)	-	-	-	1
5	31113	DIRECT MOUNT ANGLE AJUSTABLE FOOTPLATE LEFT PIVOT	1	1	1	1
6	31116	ANGLE ADJUSTABLE FOOTPLATE CLAMP	2	2	2	2
7	90868	FLAT HEAD CAP SCREW M6X1 X 20mm LONG, FULLY THREADED + BLUE THREADLOCKER - BLACK ZINC	2	2	2	2

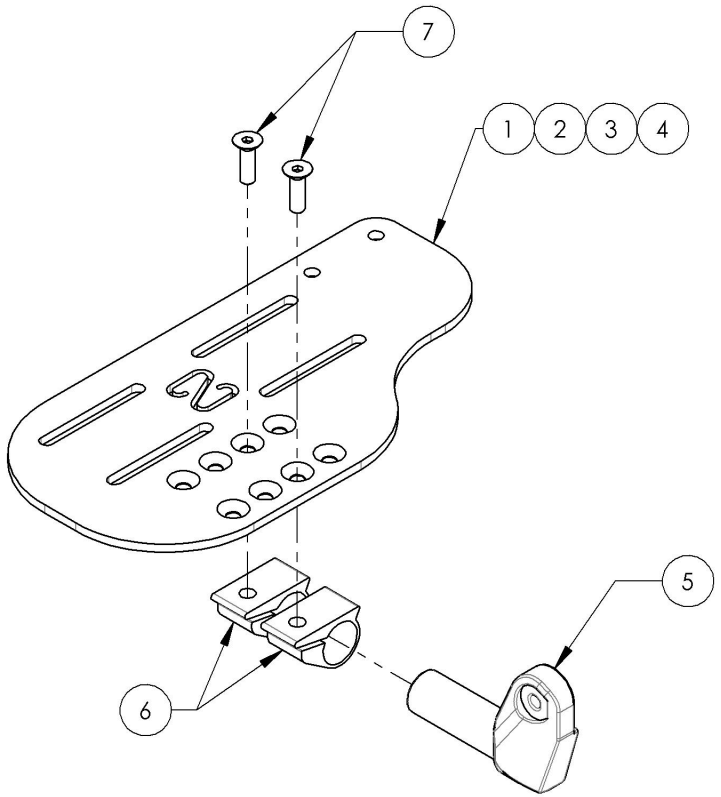

9001396
Footplate - Aluminium, Newton Angle Adjustable, Front Mount, Left, 4½ x 9½ in (Wheelchair Width: 12 to 13 in)

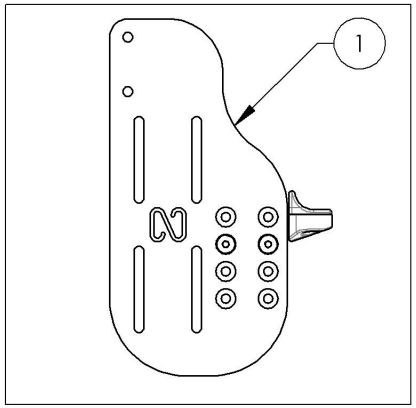

9001397
Footplate - Aluminium, Newton Angle Adjustable, Front Mount, Left, 5½ x 9½ in (Wheelchair Width: 14 to 16 in)

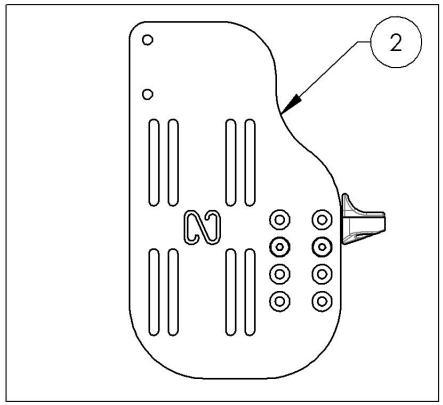

9002867
Footplate - Aluminium, Newton Angle Adjustable, Front Mount, Left 6½ x 9½ in (Wheelchair Width: 17 to 18 in)

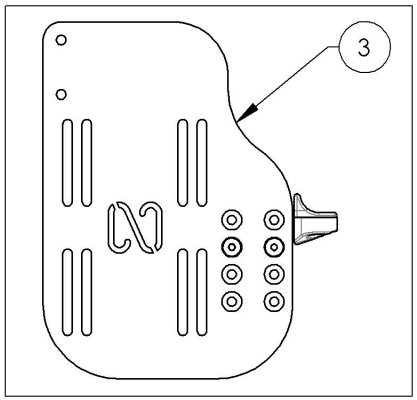

9002868
Footplate - Aluminium, Newton Angle Adjustable, Front Mount, Left 7½ x 9½ in (Wheelchair Width: 19 in +)

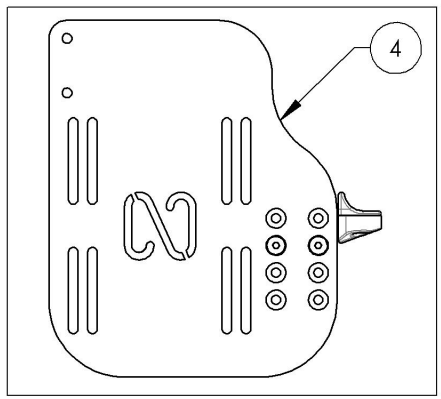

MAKE SURE TO HAVE YOUR SERIAL NUMBER NEARBY WHEN ORDERING PARTS FOR YOUR MOTION COMPOSITES WHEELCHAIR

9002859_9002861
Footplate - Composite, Newton Angle Adjustable, Front Mount, Right

ITEM NO.	PARTNO	DESCRIPTION	9002859 /QTY.	9002860 /QTY.	9002861 /QTY.
1	31229	14-16" RIGHT PLASTIC ANGLE ADJUSTABLE FOOTPLATE	1	-	-
2	31231	17-18" RIGHT PLASTIC ANGLE ADJUSTABLE FOOTPLATE	-	1	-
3	31233	19-20" RIGHT PLASTIC ANGLE ADJUSTABLE FOOTPLATE	-	-	1
4	31235	RIGHT PLASTIC ANGLE ADJUSTABLE FOOTPLATE EXTRUSION	1	1	1
5	31112	DIRECT MOUNT ANGLE AJUSTABLE FOOTPLATE RIGHT PIVOT	1	1	1
6	90868	FLAT HEAD CAP SCREW M6X1 X 20mm LONG, FULLY THREADED + BLUE THREADLOCKER - BLACK ZINC	2	2	2
7*	31237	PLASTIC ANGLE ADJUSTABLE FOOTPLATE FRICTION RUBBER BUMP - BLACK	21	21	28

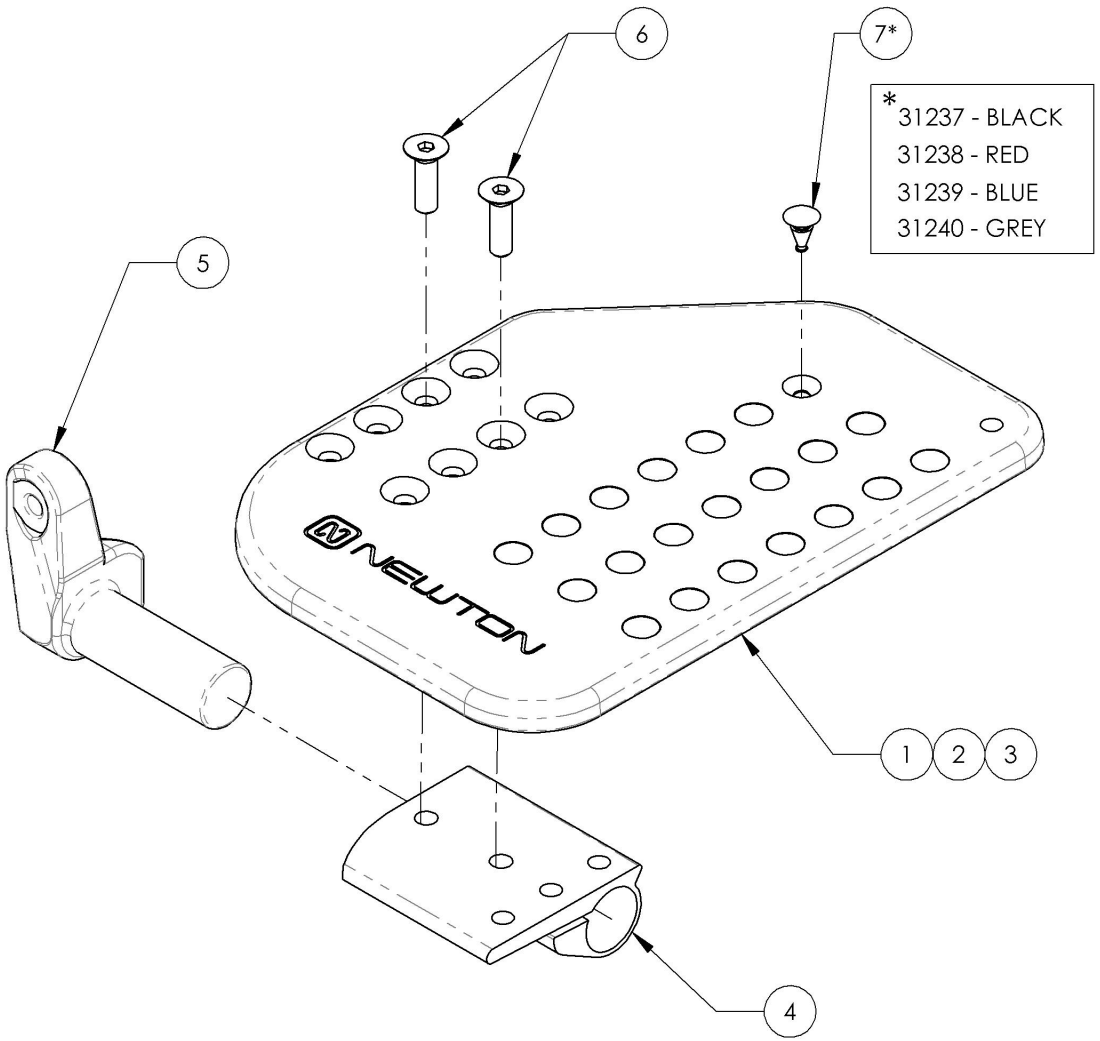

*
31237 - BLACK
31238 - RED
31239 - BLUE
31240 - GREY

9002859
Footplate - Composite, Newton Angle Adjustable, Front Mount, Right, 5½ x 8 in (Wheelchair Width: 14 to 16 in)

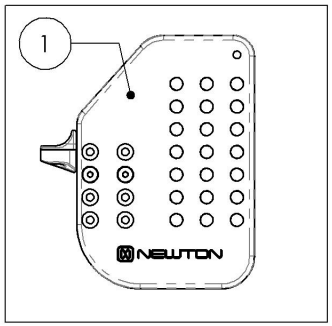

9002860
Footplate - Composite, Newton Angle Adjustable, Front Mount, Right, 6½ x 8 in (Wheelchair Width: 17 to 18 in)

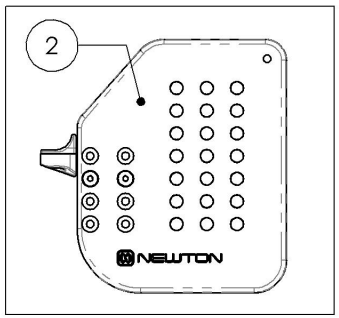

9002861
Footplate - Composite, Newton Angle Adjustable, Front Mount, Right, 7½ x 8 in (Wheelchair Width: 19 in +)

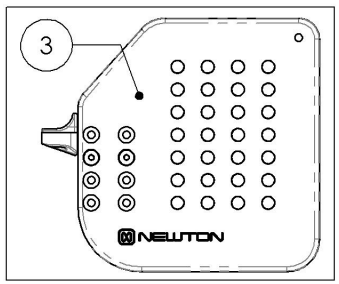

MAKE SURE TO HAVE YOUR SERIAL NUMBER NEARBY WHEN ORDERING PARTS FOR YOUR MOTION COMPOSITES WHEELCHAIR

9002862_9002864
Footplate - Composite, Newton Angle Adjustable, Front Mount, Left

ITEM NO.	PARTNO	DESCRIPTION	9002862 /QTY.	9002863 /QTY.	9002864 /QTY.
1	31230	14-16" LEFT PLASTIC ANGLE ADJUSTABLE FOOTPLATE	1	-	-
2	31232	17-18" LEFT PLASTIC ANGLE ADJUSTABLE FOOTPLATE	-	1	-
3	31234	19-20" LEFT PLASTIC ANGLE ADJUSTABLE FOOTPLATE	-	-	1
4	31113	DIRECT MOUNT ANGLE AJUSTABLE FOOTPLATE LEFT PIVOT	1	1	1
5	31236	LEFT PLASTIC ANGLE ADJUSTABLE FOOTPLATE EXTRUSION	1	1	1
6	90868	FLAT HEAD CAP SCREW M6X1 X 20mm LONG, FULLY THREADED + BLUE THREADLOCKER - BLACK ZINC	2	2	2
7*	31237	PLASTIC ANGLE ADJUSTABLE FOOTPLATE FRICTION RUBBER BUMP - BLACK	21	21	28

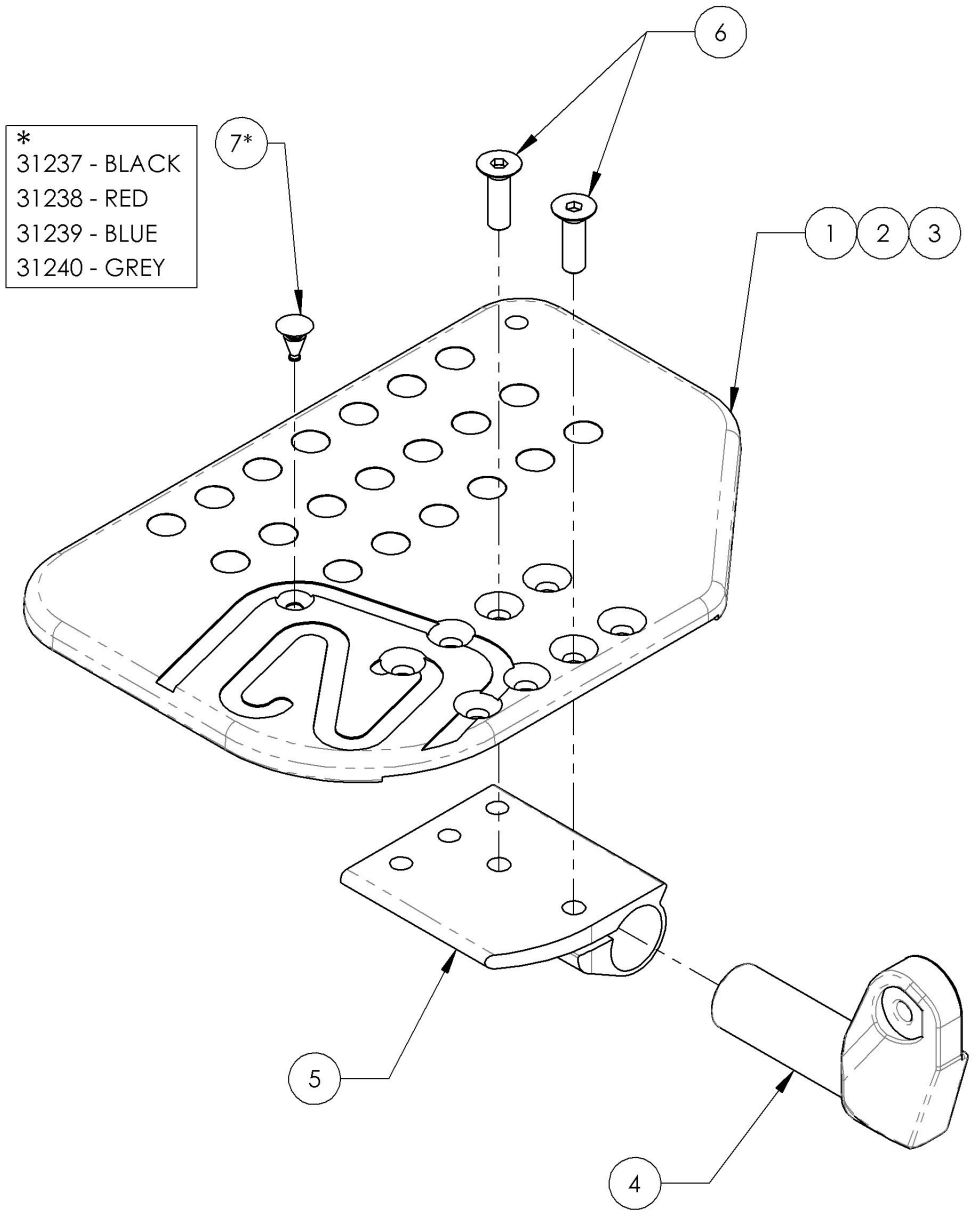

9002862
Footplate - Composite, Newton Angle Adjustable, Front Mount, Left, 5½ x 8 in (Wheelchair Width: 14 to 16 in)

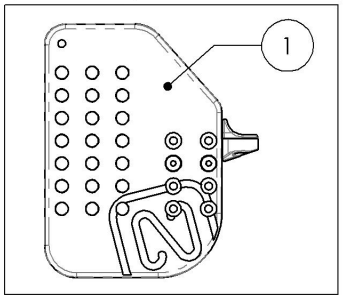

9002863
Footplate - Composite, Newton Angle Adjustable, Front Mount, Left, 6½ x 8 in (Wheelchair Width: 17 to 18 in)

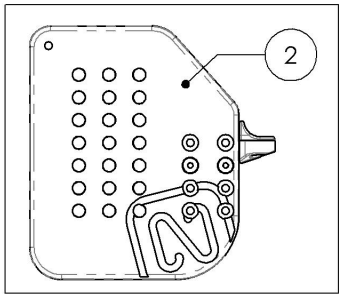

9002864
Footplate - Composite, Newton Angle Adjustable, Front Mount, Left, 7½ x 8 in (Wheelchair Width: 19 in +)

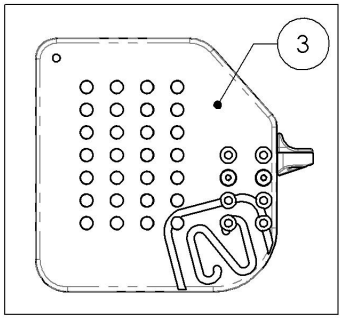

MAKE SURE TO HAVE YOUR SERIAL NUMBER NEARBY WHEN ORDERING PARTS FOR YOUR MOTION COMPOSITES WHEELCHAIR

9001411
Heel Loop - Length Adjustable

ITEM NO.	PARTNO	DESCRIPTION	9001411 /QTY.
1	31016	HEEL LOOP PIN (M)	1
2	31045	ADJUSTABLE HEEL LOOP	1
3	99559	COLLAR LOCKWASHER 1_4	1
4	91024	LOW PROFIL CAP SCREW M6 X 2.54 X 25mm	1

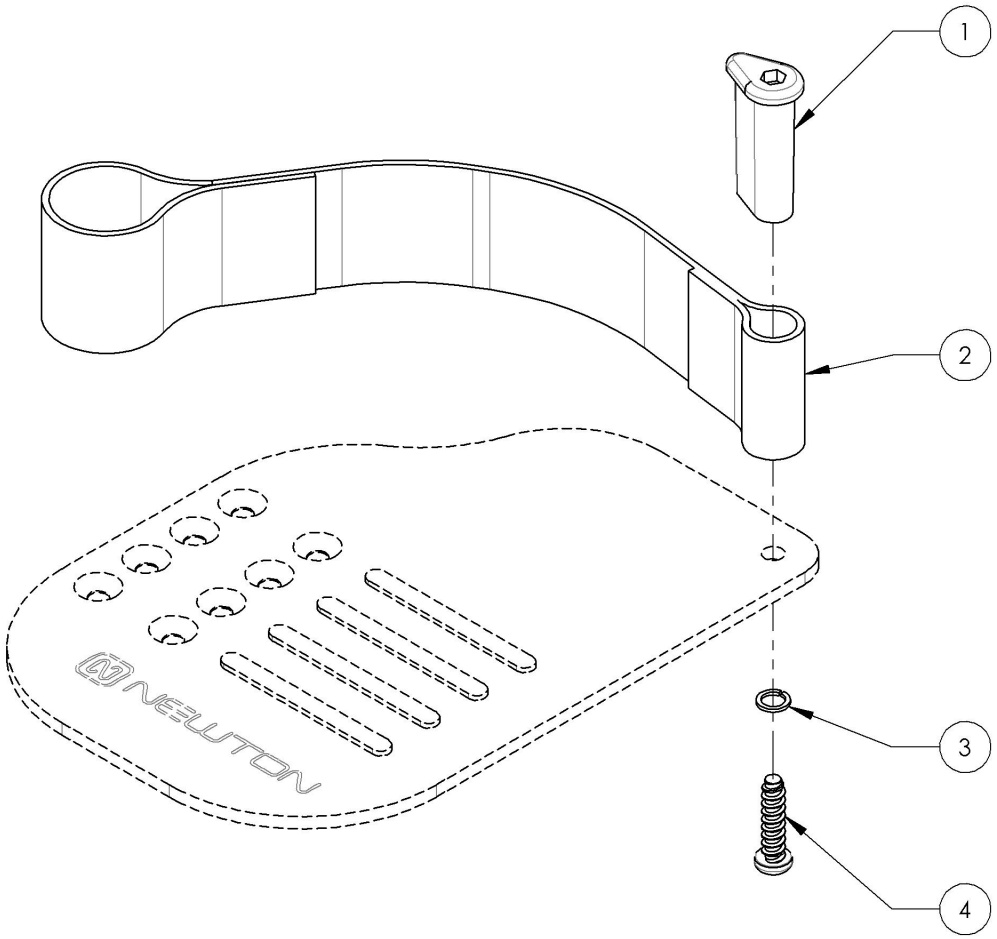

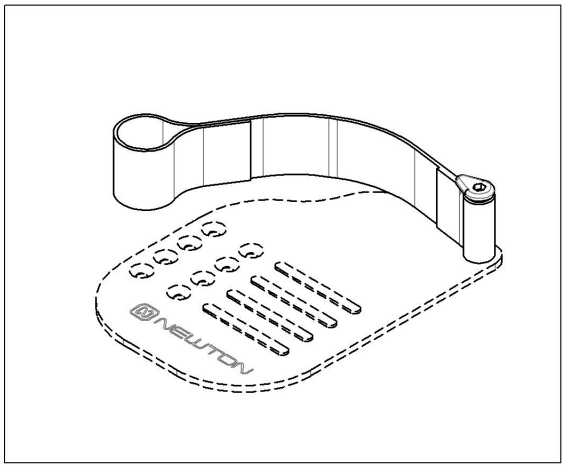

MAKE SURE TO HAVE YOUR SERIAL NUMBER NEARBY WHEN ORDERING PARTS FOR YOUR MOTION COMPOSITES WHEELCHAIR

ITEM NO.	PARTNO	DESCRIPTION	QTY.
1	9001318	Footrest - High Mount, Extension with Clamps	1

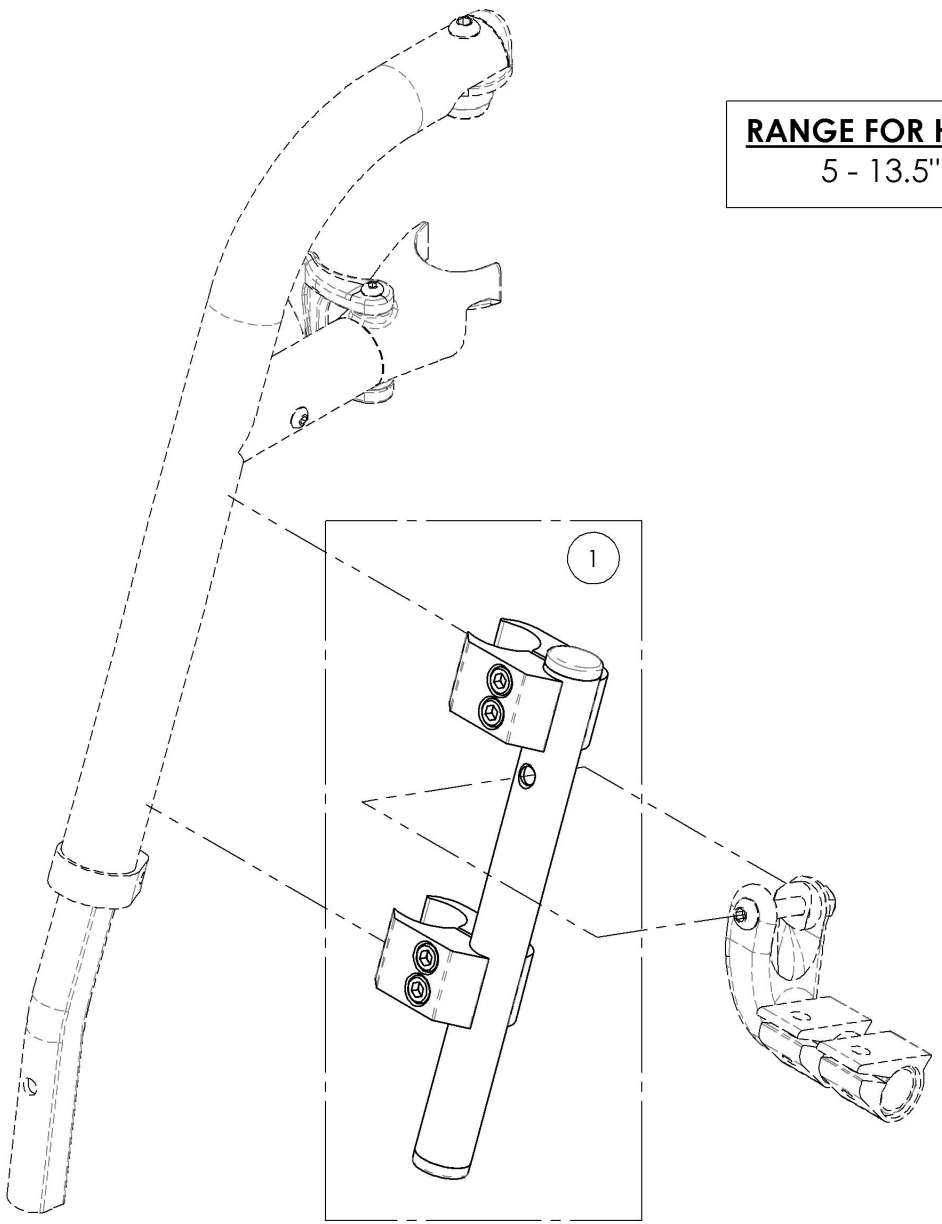

RANGE FOR HIGH MOUNT
5 - 13.5" (127 - 343mm)

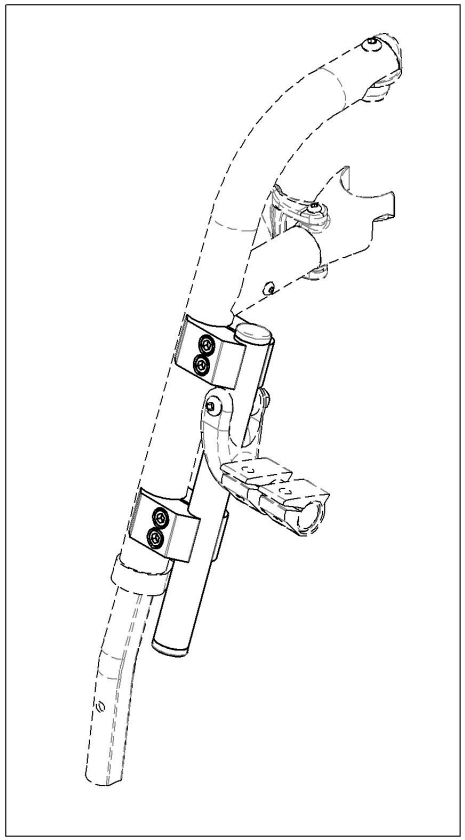

MAKE SURE TO HAVE YOUR SERIAL NUMBER NEARBY WHEN ORDERING PARTS FOR YOUR MOTION COMPOSITES WHEELCHAIR

9001318
Footrest - High Mount, Extension with Clamps

ITEM NO.	PARTNO	DESCRIPTION	QTY.
1	31638	HIGH MOUNT STRAIGTH EXTENSION - ASSY	1
2	41703	¾-1" CLAMP - ASSEMBLY	2

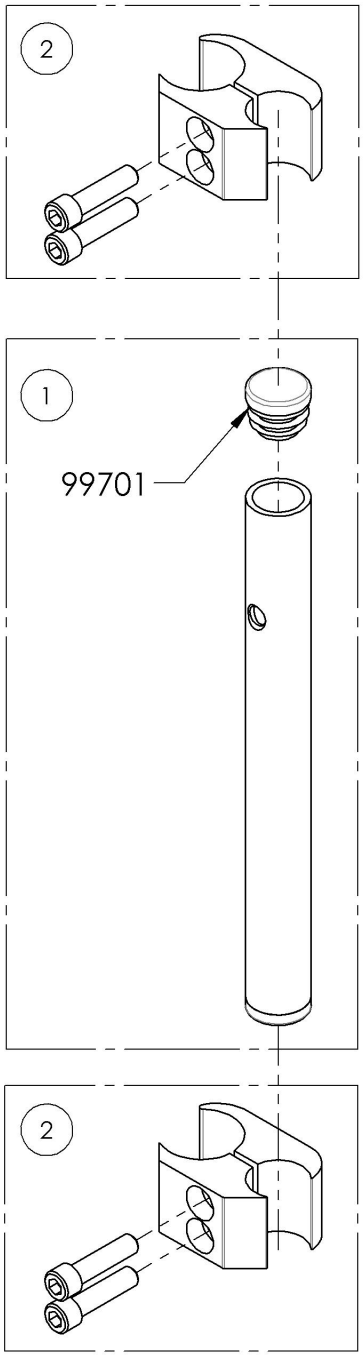

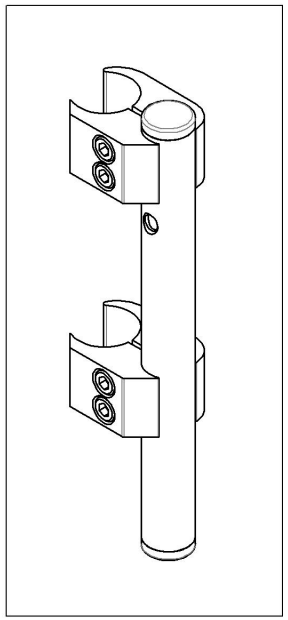

MAKE SURE TO HAVE YOUR SERIAL NUMBER NEARBY WHEN ORDERING PARTS FOR YOUR MOTION COMPOSITES WHEELCHAIR

Footrests Catalogue
Stump Supports - Swing-In/Swing-Out

ITEM NO.	PARTNO	DESCRIPTION	QTY.
1	9002416	Stump Support - Swing-In/Swing-Out, Right, 7 x 9 in	1
2	9002417	Stump Support - Swing-In/Swing-Out, Left, 7 x 9 in	1
3	9001358	Stump Support - Swing-In/Swing-Out, Right, 8 x 11 in	1
4	9001359	Stump Support - Swing-In/Swing-Out, Left, 8 x 11 in	1

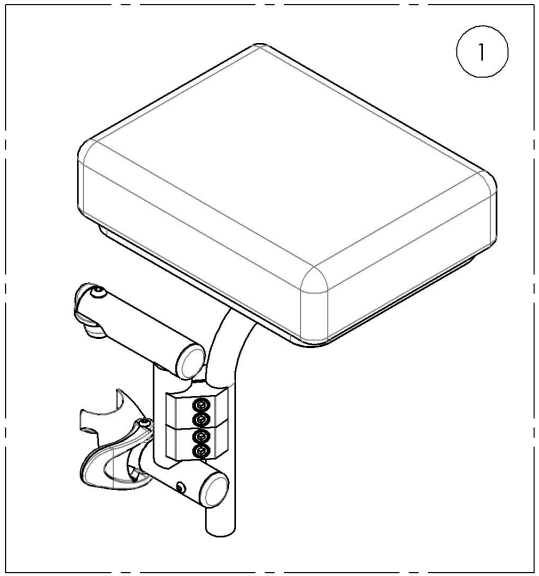

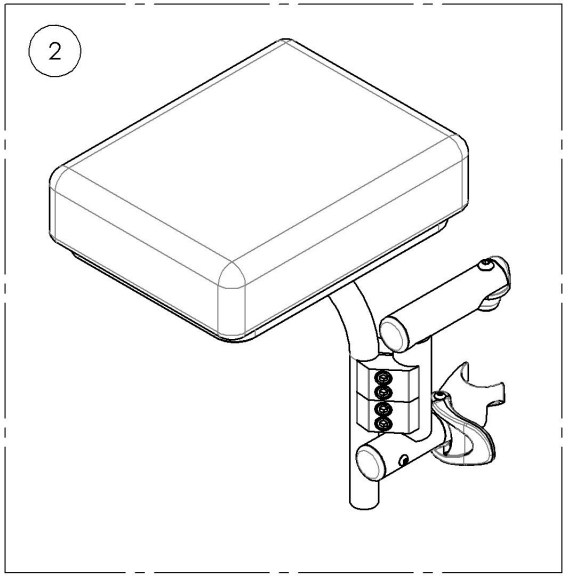

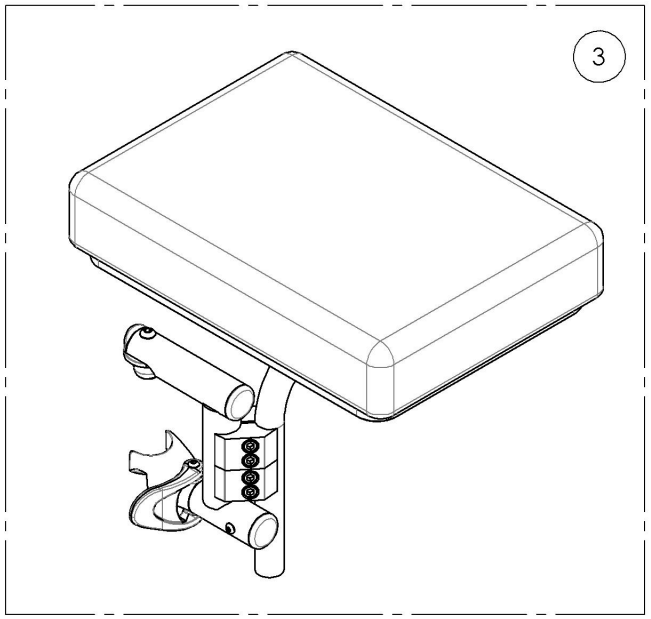

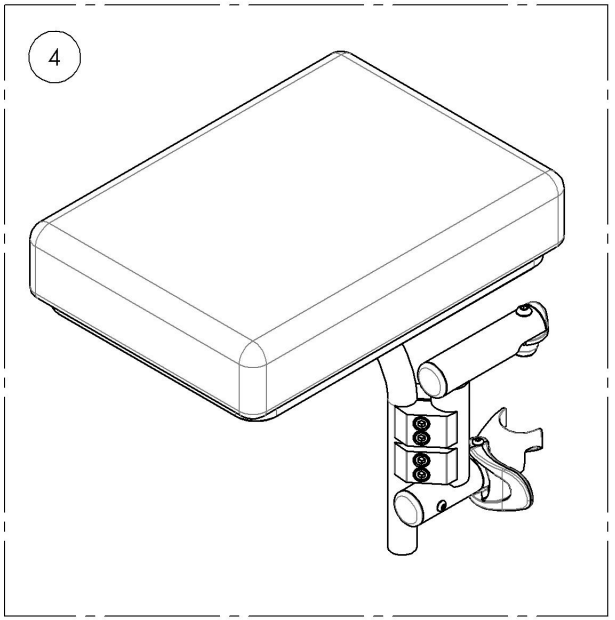

MAKE SURE TO HAVE YOUR SERIAL NUMBER NEARBY WHEN ORDERING PARTS FOR YOUR MOTION COMPOSITES WHEELCHAIR

9002416
Residual Limb Support - Swing-In/Swing-Out, Right, 7 x 9 in

ITEM NO.	PARTNO	DESCRIPTION	9002416 /QTY.	REPLACEMENT PARTS/QTY.
1	31581	V2 UNIVERSAL LEGREST HANGER RIGHT - ASSEMBLY	1	-
2	31296	RESIDUAL LIMB SUPPORT PAD & BASE PLATE 7 x 9in - ASSY	1	-
3	31323	RESIDUAL LIMB SUPPORT STRUCTURE CLAMP	1	-
4	31322	RESIDUAL LIMB SUPPORT STRUCTURE TUBE	1	-
5	41703	0.75-1 in CLAMP - ASSY	2	-
6	99701	CAP 0.75 in	2	-
7	31551	V2 FOOTREST PIVOT - ASSEMBLY	-	1
8	31550	V2 FOOTREST HOUSING RIGHT - ASSEMBLY	-	1

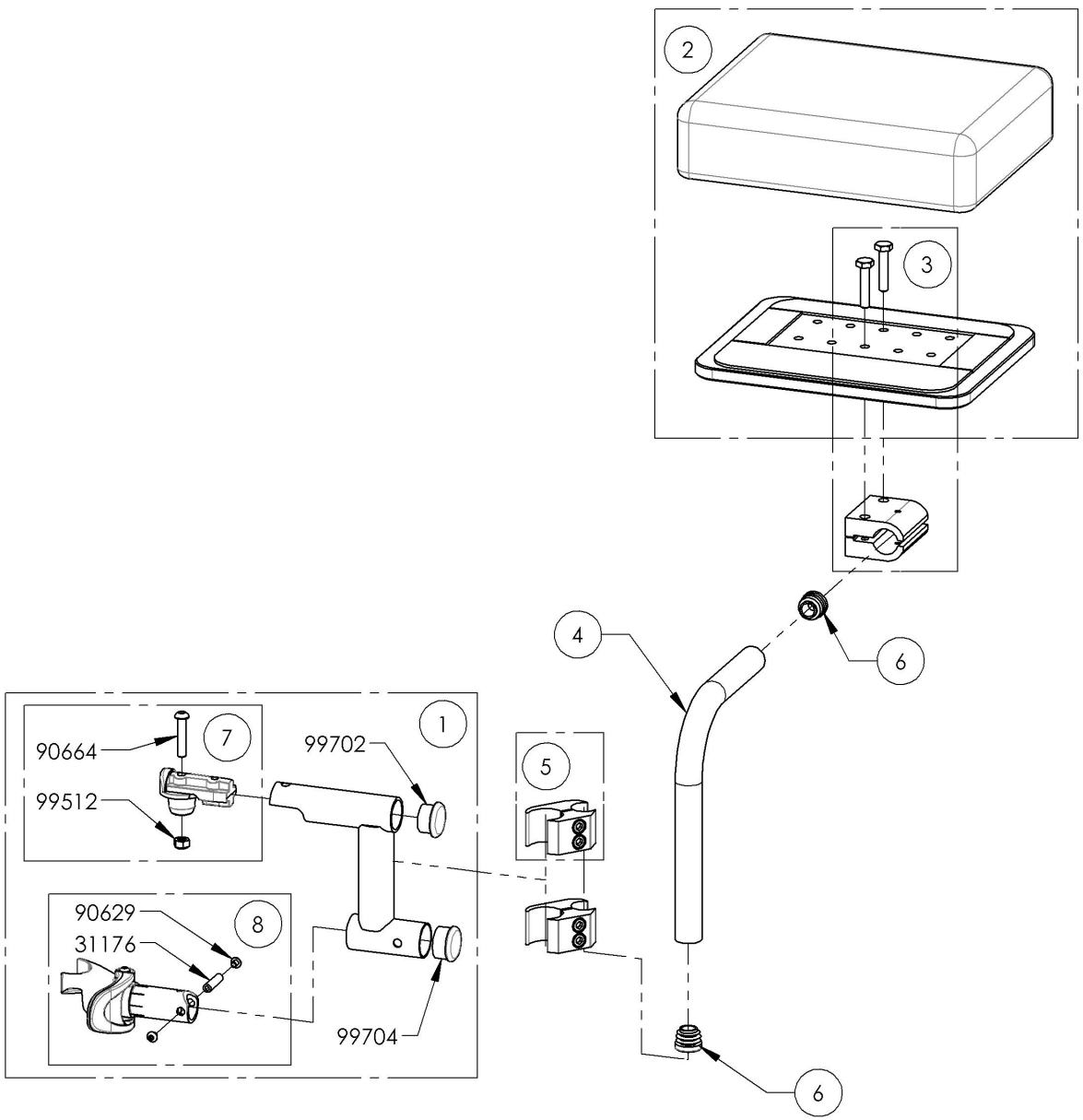

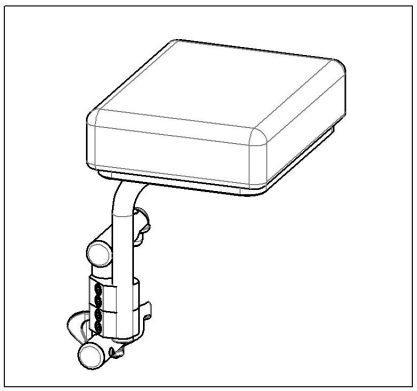

MAKE SURE TO HAVE YOUR SERIAL NUMBER NEARBY WHEN ORDERING PARTS FOR YOUR MOTION COMPOSITES WHEELCHAIR

9002417
Residual Limb Support - Swing-In/Swing-Out, Left, 7 x 9 in

ITEM NO.	PARTNO	DESCRIPTION	9002417 /QTY.	REPLACEMENT PARTS/QTY.
1	31580	V2 UNIVERSAL LEGREST HANGER LEFT - ASSEMBLY	1	-
2	31296	RESIDUAL LIMB SUPPORT PAD & BASE PLATE 7 x 9in - ASSY	1	-
3	31323	RESIDUAL LIMB SUPPORT STRUCTURE CLAMP	1	-
4	31322	RESIDUAL LIMB SUPPORT STRUCTURE TUBE	1	-
5	41703	0.75-1 in CLAMP - ASSY	2	-
6	99701	CAP 0.75 in	2	-
7	31551	V2 FOOTREST PIVOT - ASSEMBLY	-	1
8	31549	V2 FOOTREST HOUSING LEFT - ASSEMBLY	-	1

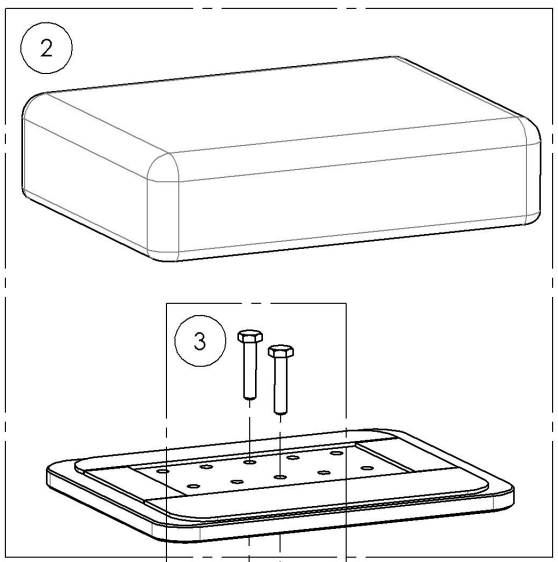

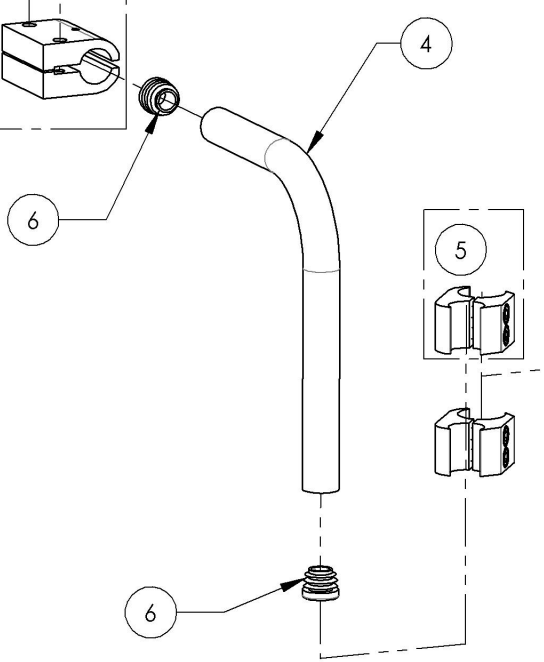

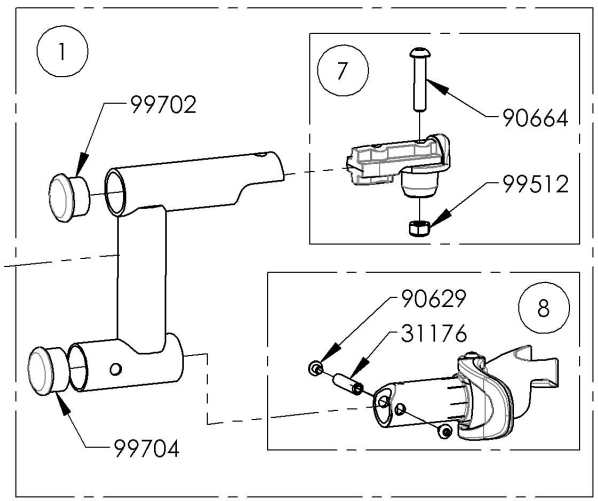

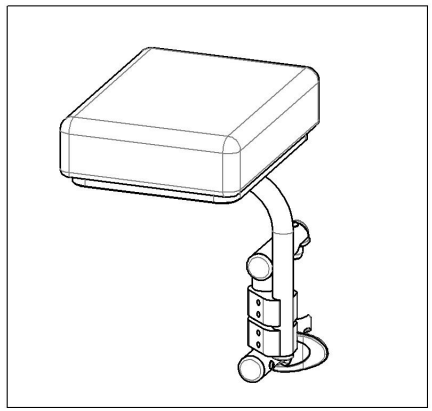

MAKE SURE TO HAVE YOUR SERIAL NUMBER NEARBY WHEN ORDERING PARTS FOR YOUR MOTION COMPOSITES WHEELCHAIR

9001358
Residual Limb Support - Swing-In/Swing-Out, Right, 8 x 11 in

ITEM NO.	PARTNO	DESCRIPTION	9001358 /QTY.	REPLACEMENT PARTS/QTY.
1	31581	V2 UNIVERSAL LEGREST HANGER RIGHT - ASSEMBLY	1	-
2	31153	RESIDUAL LIMB SUPPORT PAD & BASE PLATE 8 x 11in - ASSY	1	-
3	31323	RESIDUAL LIMB SUPPORT STRUCTURE CLAMP	1	-
4	31322	RESIDUAL LIMB SUPPORT STRUCTURE TUBE	1	-
5	41703	0.75-1 in CLAMP - ASSY	2	-
6	99701	CAP 0.75 in	2	-
7	31551	V2 FOOTREST PIVOT - ASSEMBLY	-	1
8	31550	V2 FOOTREST HOUSING RIGHT - ASSEMBLY	-	1

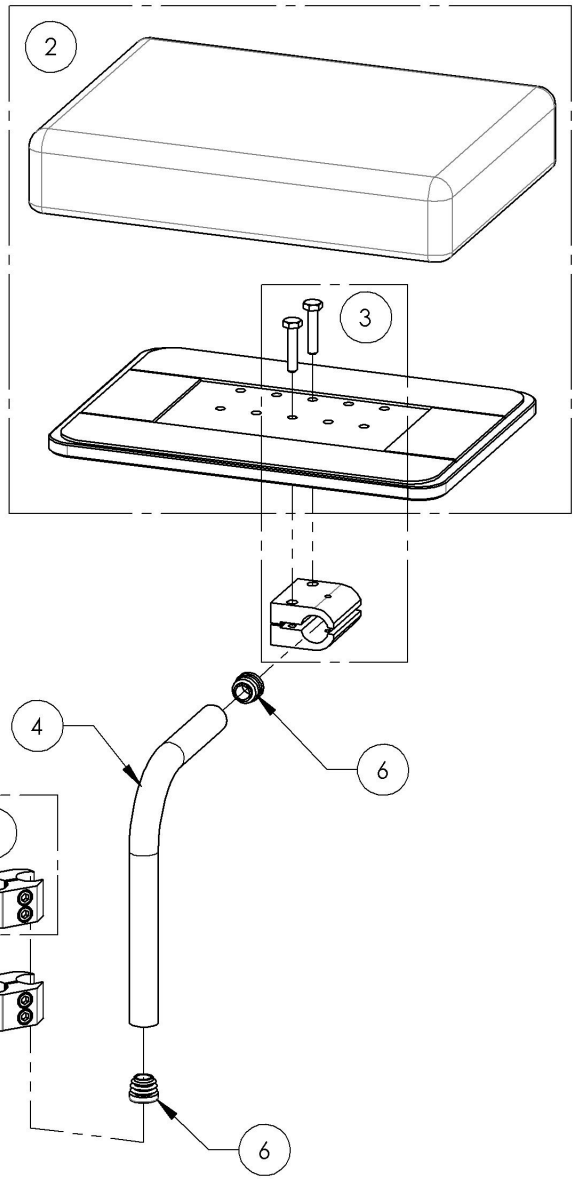

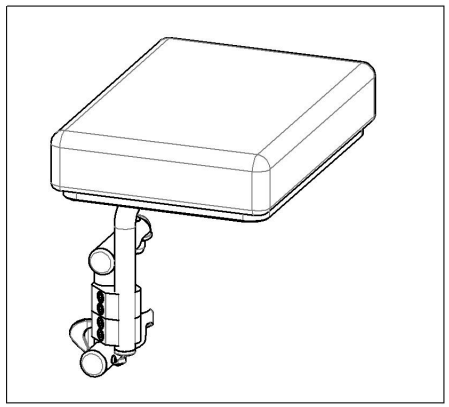

MAKE SURE TO HAVE YOUR SERIAL NUMBER NEARBY WHEN ORDERING PARTS FOR YOUR MOTION COMPOSITES WHEELCHAIR

9001359
Residual Limb Support - Swing-In/Swing-Out, Left, 8 x 11 in

ITEM NO.	PARTNO	DESCRIPTION	9001359 /QTY.	REPLACEMENT PARTS/QTY.
1	31580	V2 UNIVERSAL LEGREST HANGER LEFT - ASSEMBLY	1	-
2	31153	RESIDUAL LIMB SUPPORT PAD & BASE PLATE 8 x 11in - ASSY	1	-
3	31323	RESIDUAL LIMB SUPPORT STRUCTURE CLAMP	1	-
4	31322	RESIDUAL LIMB SUPPORT STRUCTURE TUBE	1	-
5	41703	0.75-1 in CLAMP - ASSY	2	-
6	99701	CAP 0.75 in	2	-
7	31551	V2 FOOTREST PIVOT - ASSEMBLY	-	1
8	31549	V2 FOOTREST HOUSING LEFT - ASSEMBLY	-	1

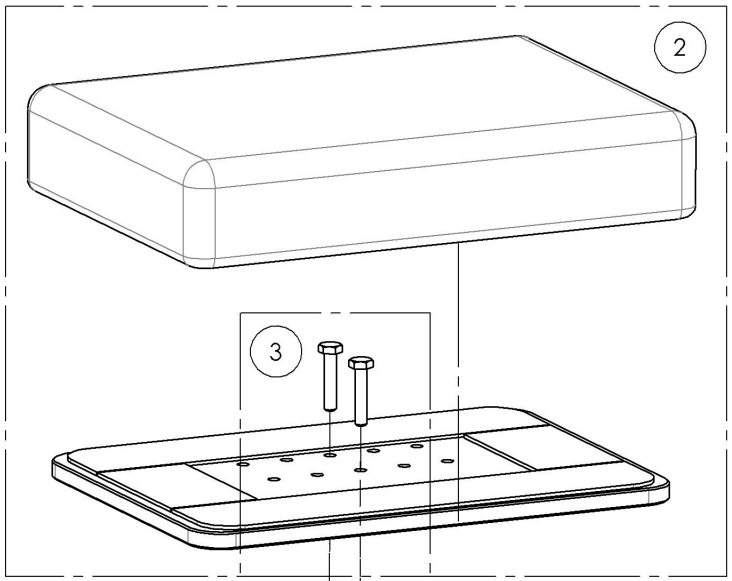

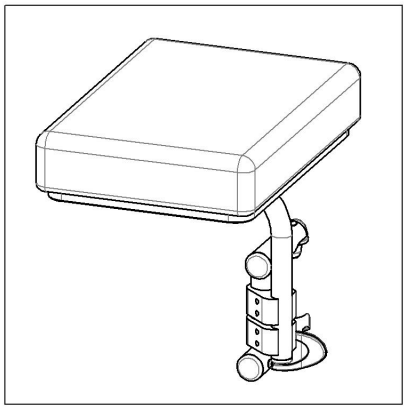

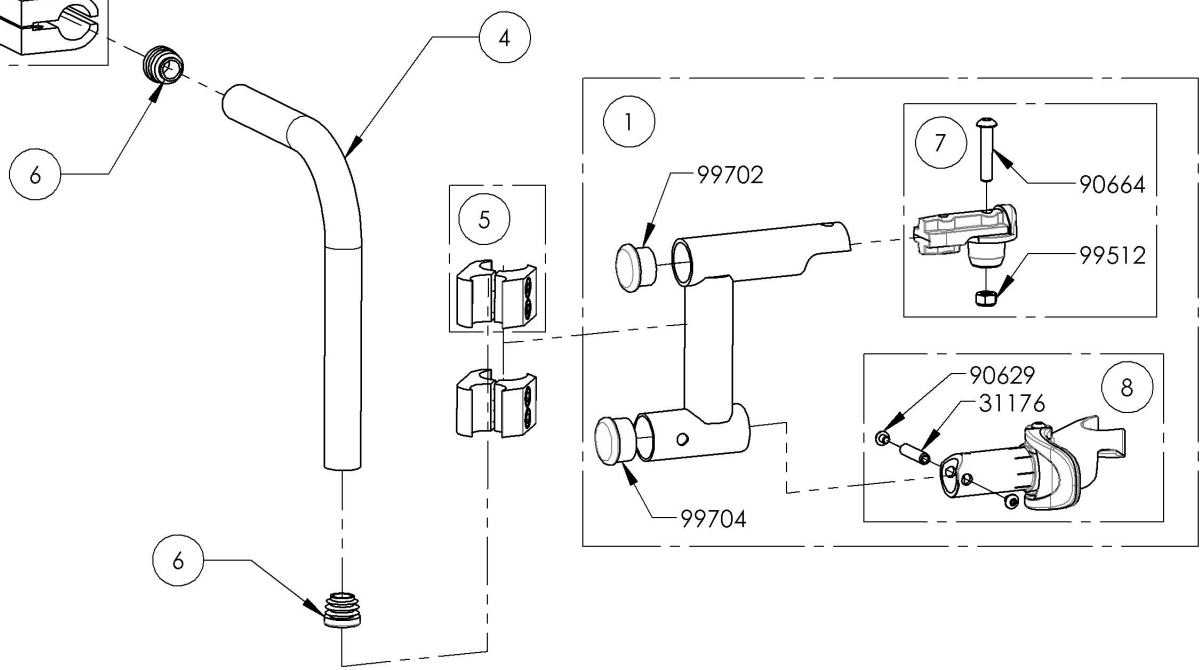

MAKE SURE TO HAVE YOUR SERIAL NUMBER NEARBY WHEN ORDERING PARTS FOR YOUR MOTION COMPOSITES WHEELCHAIR

Backrests Catalogue
Carbon Back Canes

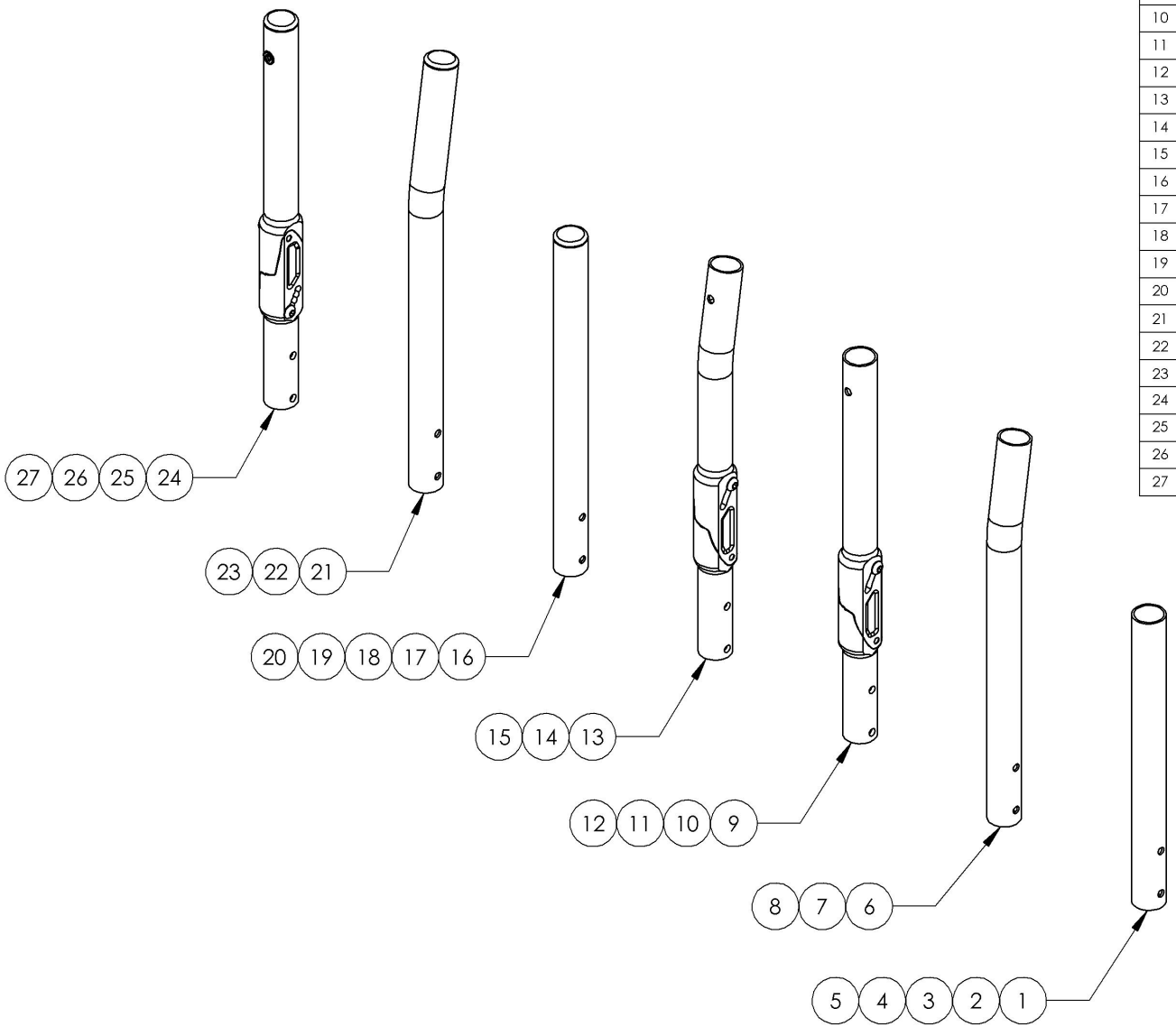

ITEM NO.	PARTNO	DESCRIPTION	QTY.
1	9001239	Back Cane - Carbon Fiber, Straight, 9-12 in	1
2	9001240	Back Cane - Carbon Fiber, Straight, 12-15 in	1
3	9001241	Back Cane - Carbon Fiber, Straight, 15-18 in	1
4	9001242	Back Cane - Carbon Fiber, Straight, 18-21 in	1
5	9001243	Back Cane - Carbon Fiber, Straight, 21- 24 in	1
6	9001244	Back Cane - Carbon Fiber, 8° bend, 13½-15 in	1
7	9001245	Back Cane - Carbon Fiber, 8° bend, 15-18 in	1
8	9001246	Back Cane - Carbon Fiber, 8° bend, 18-21 in	1
9	9001247	Back Cane - Carbon Fiber, Angle adjustable, Straight, 12-15 in	1
10	9001248	Back Cane - Carbon Fiber, Angle adjustable, Straight, 15-18 in	1
11	9001249	Back Cane - Carbon Fiber, Angle adjustable, Straight, 18-21 in	1
12	9001250	Back Cane - Carbon Fiber, Angle adjustable, Straight, 21-24 in	1
13	9001005	Back Cane - Carbon Fiber, Angle Adjustable, 8° bend, 13½-15 in	1
14	9001251	Back Cane - Carbon Fiber, Angle adjustable, 8° bend, 15-18 in	1
15	9001252	Back Cane - Carbon Fiber, Angle adjustable, 8° bend, 18-21 in	1
16	9002875	Back Cane - Carbon Fiber, Straight, Fixed, 9 in	1
17	9001253	Back Cane - Carbon Fiber, Straight, Fixed 12 in	1
18	9001254	Back Cane - Carbon Fiber, Straight, Fixed 15 in	1
19	9001255	Back Cane - Carbon Fiber, Straight, Fixed 18 in	1
20	9001256	Back Cane - Carbon Fiber, Straight, Fixed 21 in	1
21	9001257	Back Cane - Carbon Fiber, 8° bend, Fixed 13½ in	1
22	9001258	Back Cane - Carbon Fiber, 8° bend, Fixed 15 in	1
23	9001259	Back Cane - Carbon Fiber, 8° bend, Fixed 18 in	1
24	9001260	Back Cane - Carbon Fiber, Angle adjustable, Fixed 13.5 in	1
25	9001261	Back Cane - Carbon Fiber, Angle adjustable, Fixed 15 in	1
26	9001262	Back Cane - Carbon Fiber, Angle adjustable, Fixed 18 in	1
27	9001263	Back Cane - Carbon Fiber, Angle adjustable, Fixed 21 in	1

MAKE SURE TO HAVE YOUR SERIAL NUMBER NEARBY WHEN ORDERING PARTS FOR YOUR MOTION COMPOSITES WHEELCHAIR

9001247_9001250
Back Cane - Carbon Fiber, Angle adjustable, Straight

ITEM NO.	PARTNO	DESCRIPTION	9001247 /QTY.	9001248 /QTY.	9001249 /QTY.	9001250 /QTY.
1	32520	CARBON FIBER ADJUSTABLE ANGLE BACK CANE 13.5"-15" (M)	1	-	-	-
2	32521	CARBON FIBER ADJUSTABLE ANGLE BACK CANE 15"-18" (M)	-	1	-	-
3	32522	CARBON FIBER ADJUSTABLE ANGLE BACK CANE 18"-21" (M)	-	-	1	-
4	32527	CARBON FIBER ADJUSTABLE ANGLE BACK CANE 21"-24" (M)	-	-	-	1
5	32037	LOWER ADJUSTABLE BACKREST (M)	1	1	1	1
6	90663	BUTTON HEAD CAP SCREW M6X1 X 25mm LONG, FULLY THREADED	2	2	2	2

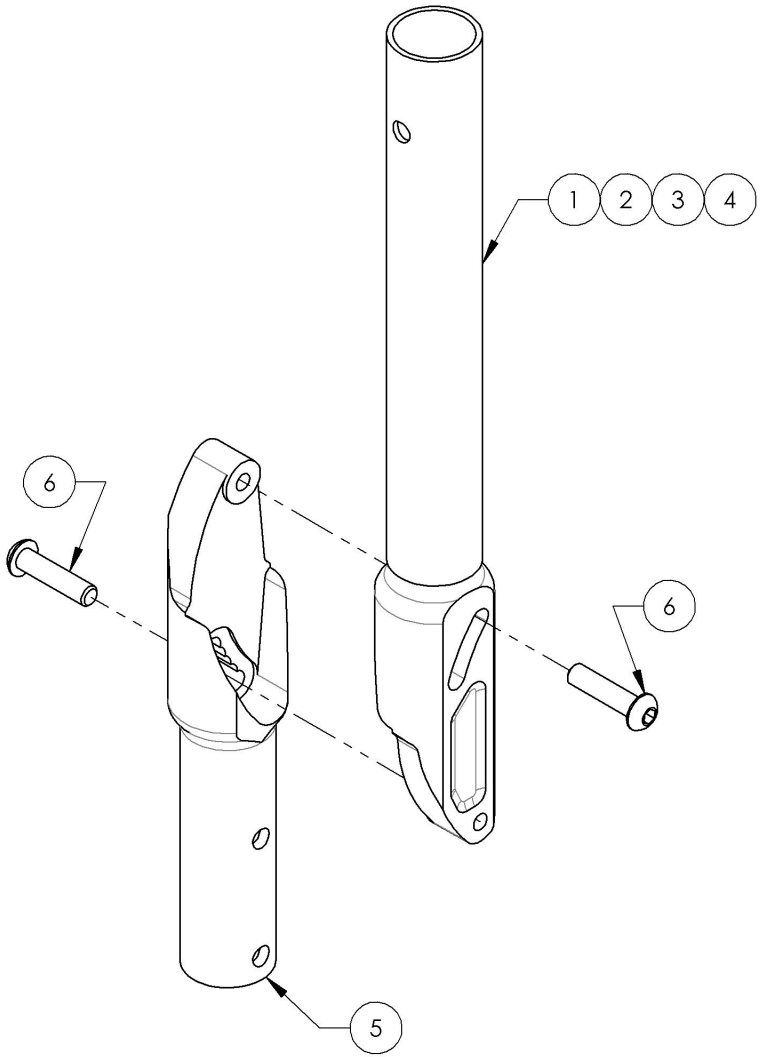

9001247
Back Cane - Carbon Fiber, Angle adjustable, Straight, 12-15 in

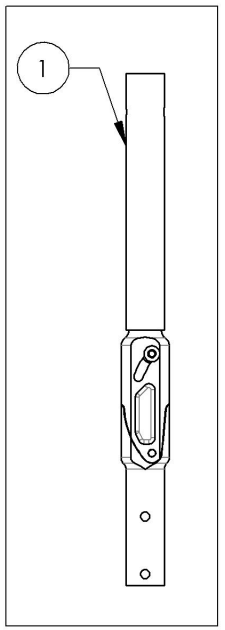

9001248
Back Cane - Carbon Fiber, Angle adjustable, Straight, 15-18 in

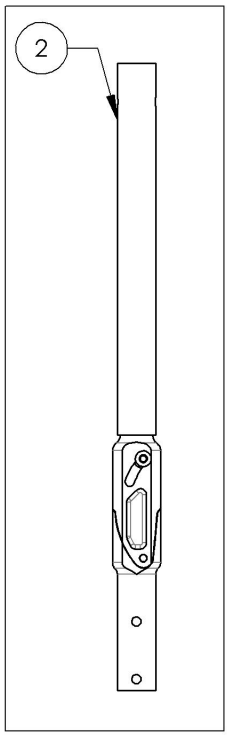

9001249
Back Cane - Carbon Fiber, Angle adjustable, Straight, 18-21 in

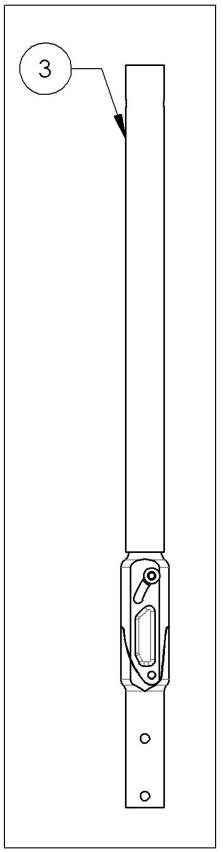

9001250
Back Cane - Carbon Fiber, Angle adjustable, Straight, 21-24 in

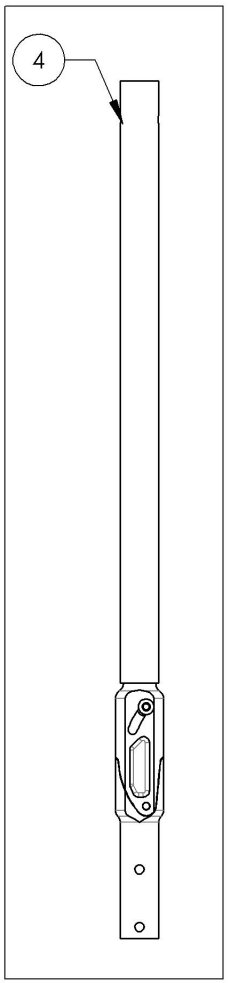

MAKE SURE TO HAVE YOUR SERIAL NUMBER NEARBY WHEN ORDERING PARTS FOR YOUR MOTION COMPOSITES WHEELCHAIR

9001005 & 9001251_9001252
Back Cane - Carbon Fiber, Angle adjustable, 8˚ bend

ITEM NO.	PARTNO	DESCRIPTION	9001005 /QTY.	9001251 /QTY.	9001252 /QTY.
1	32523	CARBON FIBER ADJUSTABLE ANGLE 8 DEG BEND BACK CANE 13½-15in (M)	1	-	-
2	32524	CARBON FIBER ADJUSTABLE ANGLE 8 DEG BEND BACK CANE 15-18in (M)	-	1	-
3	32525	CARBON FIBER ADJUSTABLE ANGLE 8 DEG BEND BACK CANE 18-21in (M)	-	-	1
4	32037	LOWER ADJUSTABLE BACKREST (M)	1	1	1
5	90663	BUTTON HEAD CAP SCREW M6X1 X 25mm LONG, FULLY THREADED	2	2	2

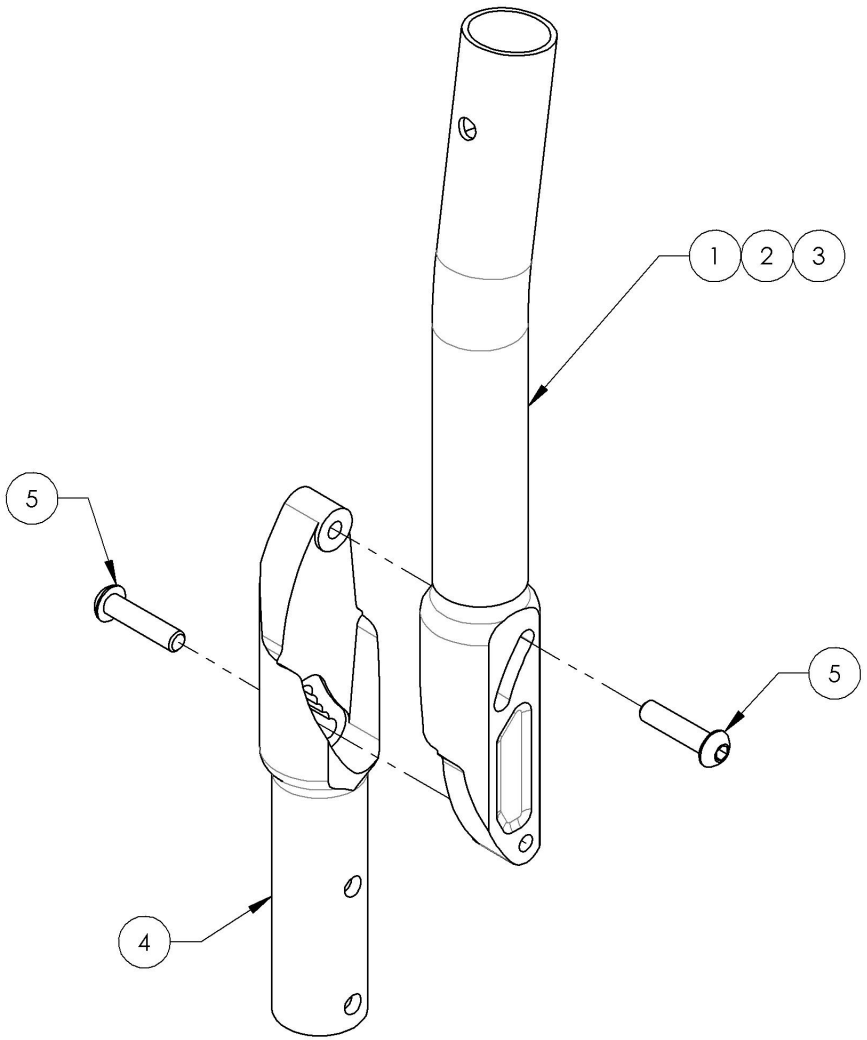

9001005
Back Cane - Carbon Fiber, Angle Adjustable, 8° bend, 13½-15 in

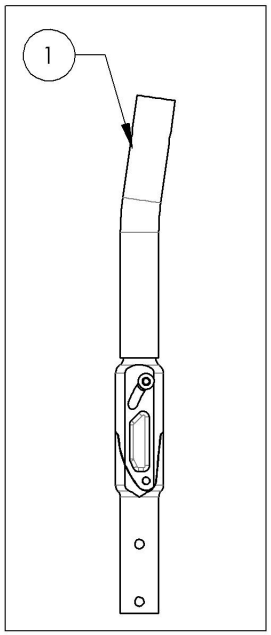

9001251
Back Cane - Carbon Fiber, Angle adjustable, 8° bend, 15-18 in

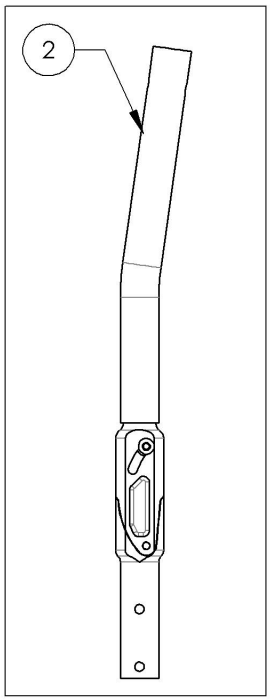

9001252
Back Cane - Carbon Fiber, Angle adjustable, 8° bend, 18-21 in

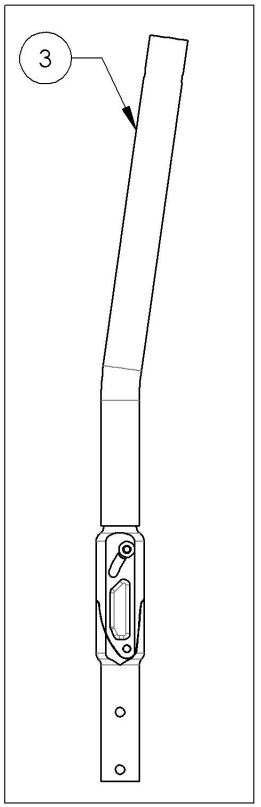

MAKE SURE TO HAVE YOUR SERIAL NUMBER NEARBY WHEN ORDERING PARTS FOR YOUR MOTION COMPOSITES WHEELCHAIR

9002875
Back Cane - Carbon Fiber, Straight, Fixed, 9 in

ITEM NO.	PARTNO	DESCRIPTION	QTY.
1	32118	CARBON STRAIGHT BACK CANE 9 in NO PUSH HANDLE (M)	1
2	99704	CAP 1 IN CARBON	1

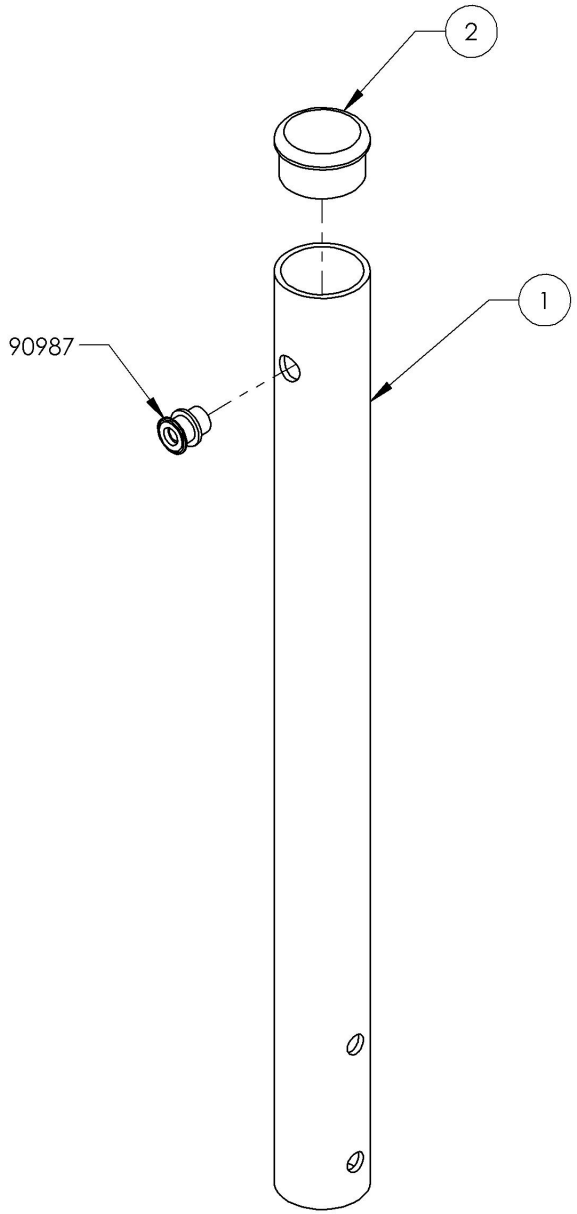

MAKE SURE TO HAVE YOUR SERIAL NUMBER NEARBY WHEN ORDERING PARTS FOR YOUR MOTION COMPOSITES WHEELCHAIR

9001253_9001256
Back Cane - Carbon Fiber, Straight, Fixed Height

ITEM NO.	PARTNO	DESCRIPTION	9001253 /QTY.	9001254 /QTY.	9001255 /QTY.	9001256 /QTY.
1	32039	CARBON STRAIGHT BACK CANE 12" NO PUSH HANDLE (M)	1	-	-	-
2	32040	CARBON STRAIGHT BACK CANE 15" NO PUSH HANDLE (M)	-	1	-	-
3	32041	CARBON STRAIGHT BACK CANE 18" NO PUSH HANDLE (M)	-	-	1	-
4	32042	CARBON STRAIGHT BACK CANE 21" NO PUSH HANDLE (M)	-	-	-	1
5	99704	CAP 1 IN CARBON	1	1	1	1

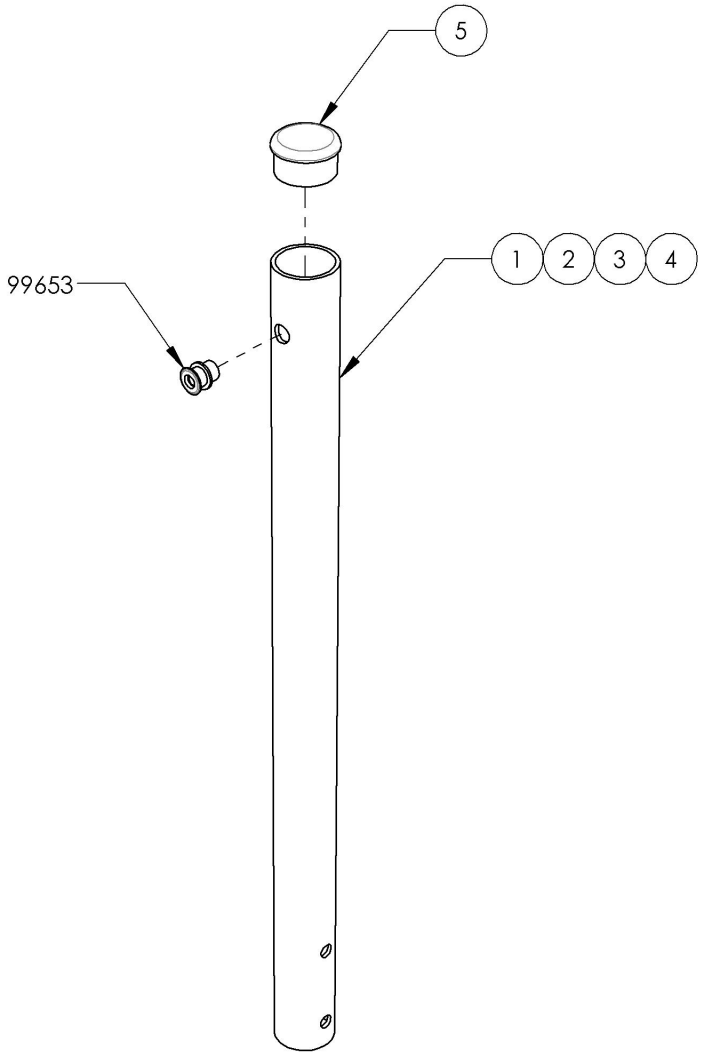

9001253
Back Cane - Carbon Fiber, Straight, Fixed 12 in

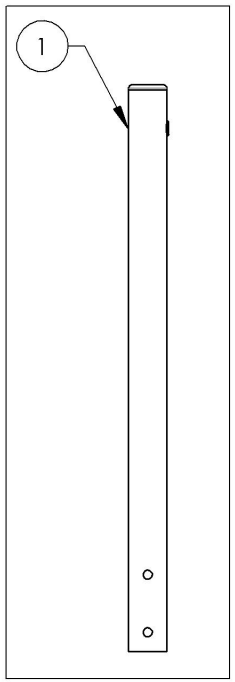

9001254
Back Cane - Carbon Fiber, Straight, Fixed 15 in

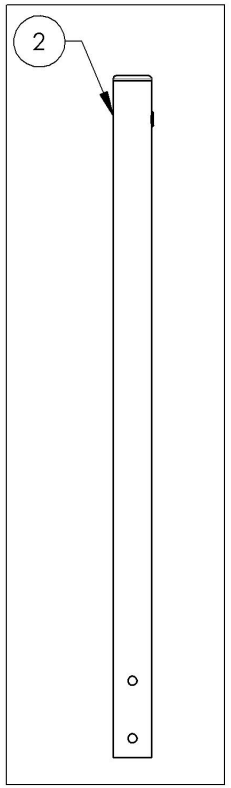

9001255
Back Cane - Carbon Fiber, Straight, Fixed 18 in

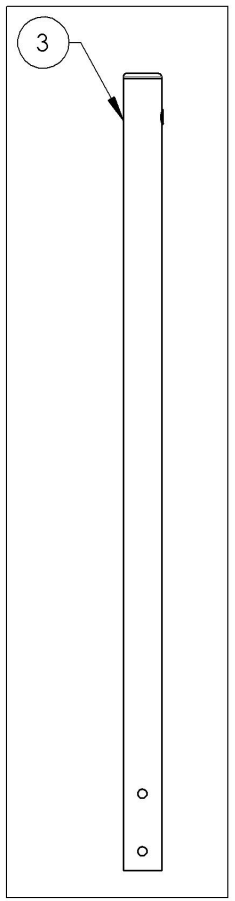

9001256
Back Cane - Carbon Fiber, Straight, Fixed 21 in

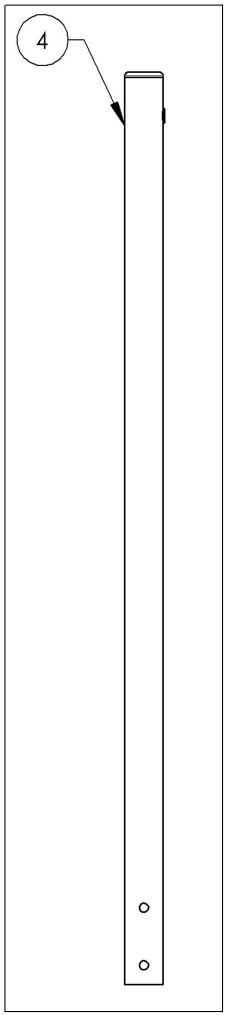

MAKE SURE TO HAVE YOUR SERIAL NUMBER NEARBY WHEN ORDERING PARTS FOR YOUR MOTION COMPOSITES WHEELCHAIR

9001257_9001259
Back Cane - Carbon Fiber, 8˚ bend, Fixed Height

ITEM NO.	PARTNO	DESCRIPTION	9001257 /QTY.	9001258 /QTY.	9001259 /QTY.
1	32043	CARBON 8° BEND BACK CANE 13½" NO PUSH HANDLE (M)	1	-	-
2	32044	CARBON 8° BEND BACK CANE 15" NO PUSH HANDLE (M)	-	1	-
3	32045	CARBON 8° BEND BACK CANE 18" NO PUSH HANDLE (M)	-	-	1
4	99704	CAP 1 IN CARBON	1	1	1

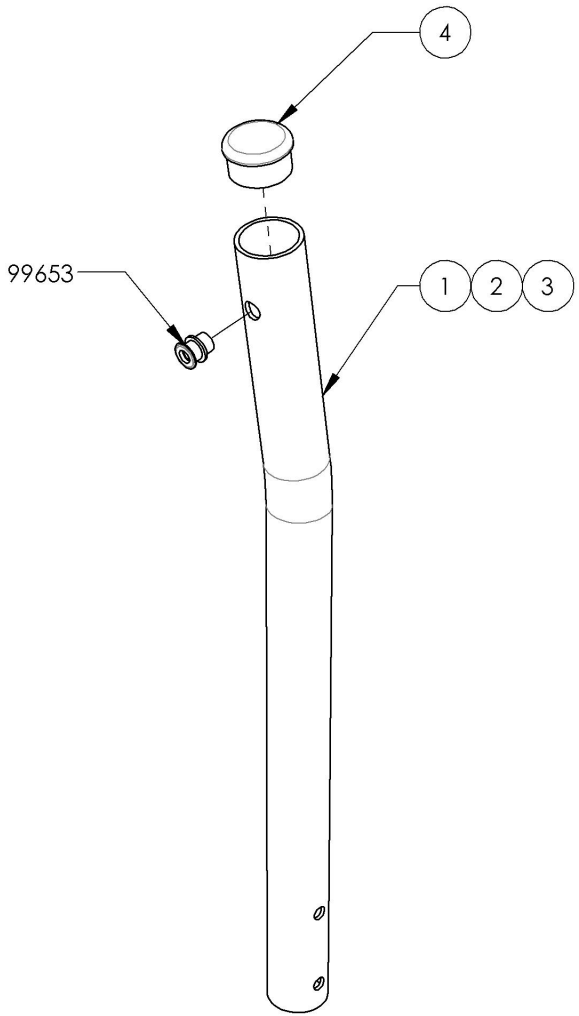

9001257
Back Cane - Carbon Fiber, 8° bend, Fixed 13½ in

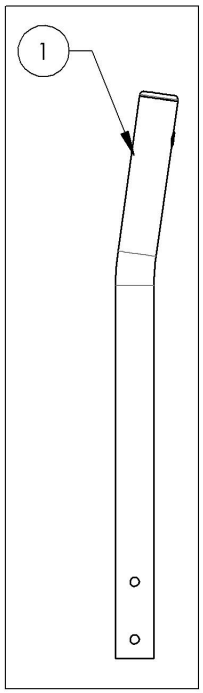

9001258
Back Cane - Carbon Fiber, 8° bend, Fixed 15 in

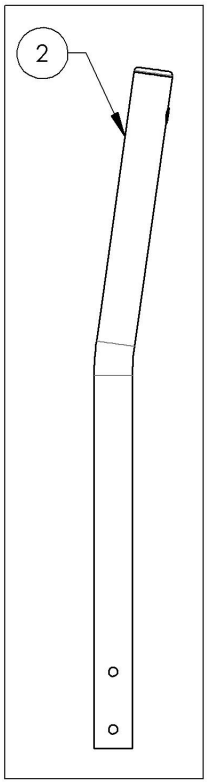

9001259
Back Cane - Carbon Fiber, 8° bend, Fixed 18 in

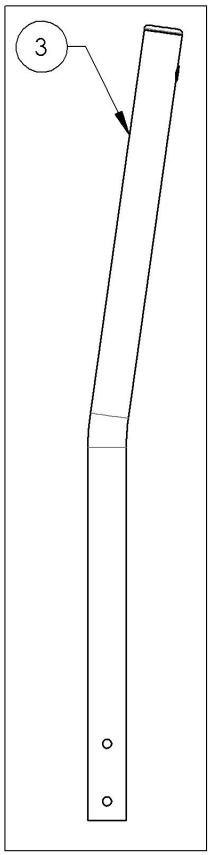

MAKE SURE TO HAVE YOUR SERIAL NUMBER NEARBY WHEN ORDERING PARTS FOR YOUR MOTION COMPOSITES WHEELCHAIR

9001260_9001263
Back Cane - Carbon Fiber, Angle adjustable, Fixed Height

ITEM NO.	PARTNO	DESCRIPTION	9001260 /QTY.	9001261 /QTY.	9001262 /QTY.	9001263 /QTY.
1	32520	CARBON FIBER ADJUSTABLE ANGLE BACK CANE 13.5"-15" (M)	1	-	-	-
2	32521	CARBON FIBER ADJUSTABLE ANGLE BACK CANE 15"-18" (M)	-	1	-	-
3	32522	CARBON FIBER ADJUSTABLE ANGLE BACK CANE 18"-21" (M)	-	-	1	-
4	32527	CARBON FIBER ADJUSTABLE ANGLE BACK CANE 21"-24" (M)	-	-	-	1
5	99704	CAP 1 IN CARBON	1	1	1	1
6	32037	LOWER ADJUSTABLE BACKREST (M)	1	1	1	1
7	90663	BUTTON HEAD CAP SCREW M6X1 X 25mm LONG, FULLY THREADED	2	2	2	2

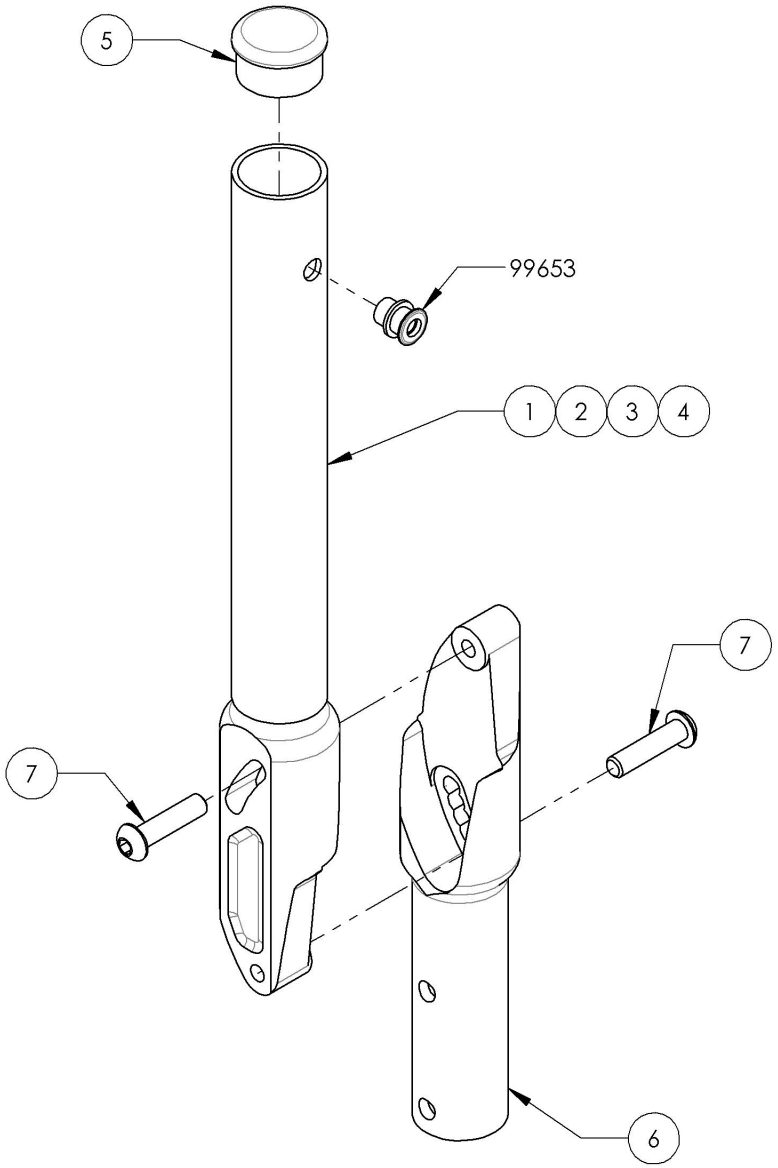

9001260
Back Cane -
Carbon Fiber,
Angle adjustable,
Fixed 13.5 in

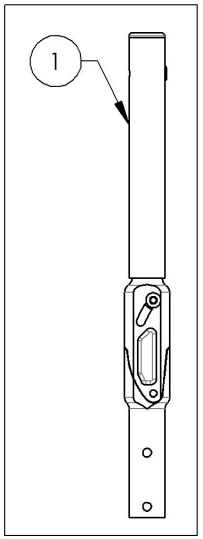

9001261
Back Cane -
Carbon Fiber,
Angle adjustable,
Fixed 15 in

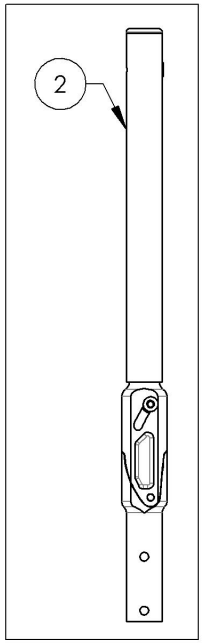

9001262
Back Cane -
Carbon Fiber,
Angle adjustable,
Fixed 18 in

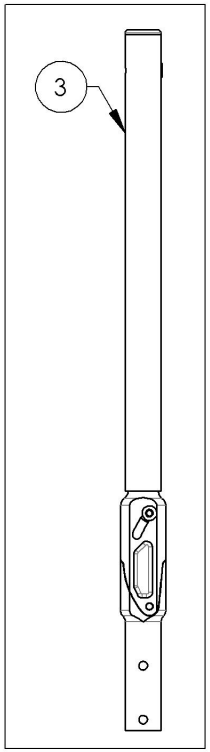

9001263
Back Cane -
Carbon Fiber,
Angle adjustable,
Fixed 21 in

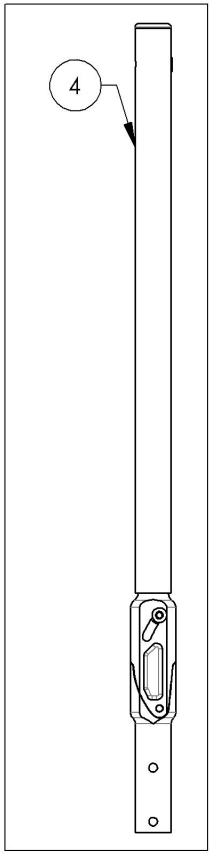

MAKE SURE TO HAVE YOUR SERIAL NUMBER NEARBY WHEN ORDERING PARTS FOR YOUR MOTION COMPOSITES WHEELCHAIR

Backrests Catalogue
Aluminum Back Canes

ITEM NO.	PARTNO	DESCRIPTION	QTY.
1	9001264	Back Cane - Aluminum, Straight, 9-12 in	1
2	9001265	Back Cane - Aluminum, Straight, 12-15 in	1
3	9001266	Back Cane - Aluminum, Straight, 15-18 in	1
4	9001267	Back Cane - Aluminum, Straight, 18-21 in	1
5	9001268	Back Cane - Aluminum, 8° bend, 13½-15 in	1
6	9001269	Back Cane - Aluminum, 8° bend, 15-18 in	1
7	9001270	Back Cane - Aluminum, 8° bend, 18-21 in	1
8	9001271	Back Cane - Aluminum, Angle Adjustable, Straight, 15-18 in	1
9	9001272	Back Cane - Aluminum, Angle Adjustable, Straight, 18-21 in	1
10	9001273	Back Cane - Aluminum, Angle Adjustable, 8° bend, 15-18 in	1
11	9001274	Back Cane - Aluminum, Angle Adjustable, 8° bend, 18-21 in	1

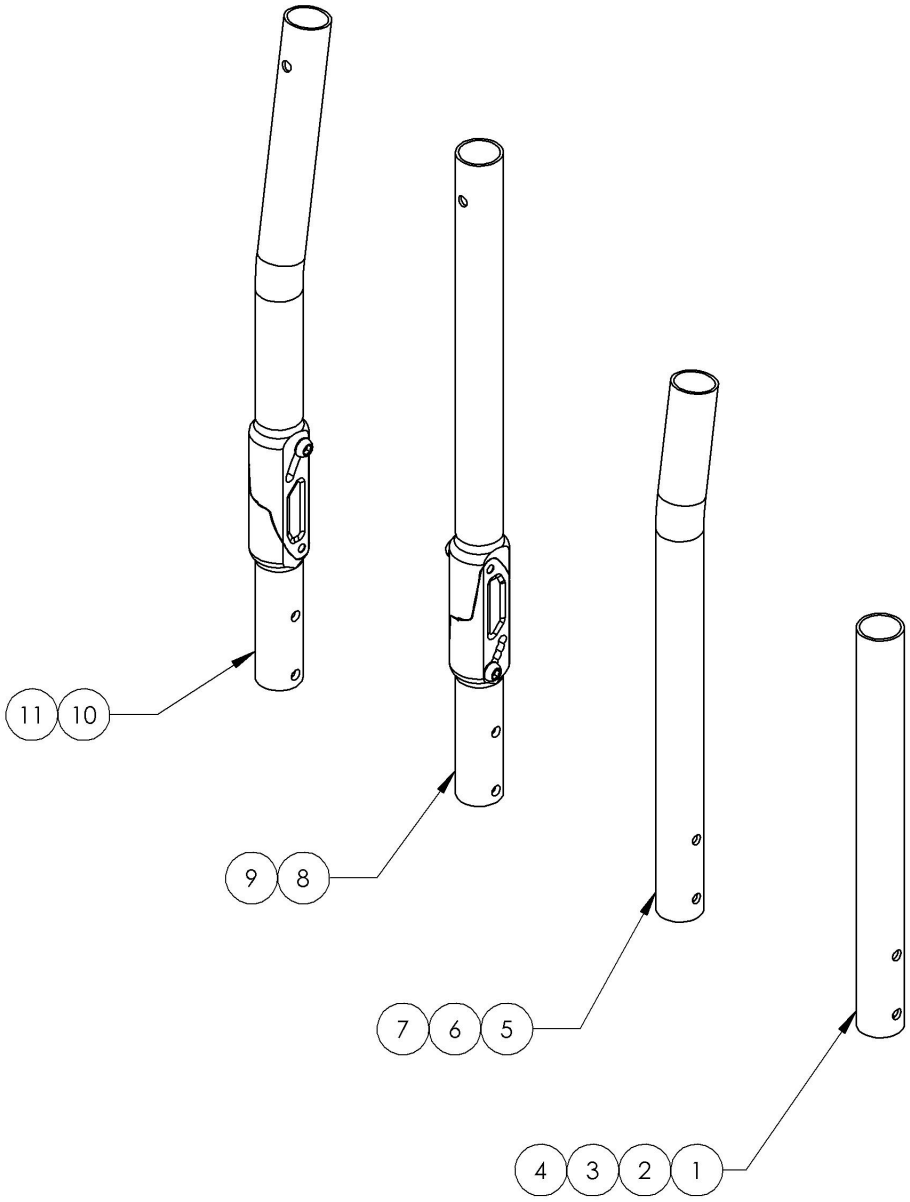

MAKE SURE TO HAVE YOUR SERIAL NUMBER NEARBY WHEN ORDERING PARTS FOR YOUR MOTION COMPOSITES WHEELCHAIR

9001271_9001272
Back Cane - Aluminum, Angle adjustable, Straight

ITEM NO.	PARTNO	DESCRIPTION	9001271 /QTY.	9001272 /QTY.
1	32518	ALUMINUM ADJUSTABLE ANGLE BACK 15"-18" (M)	1	-
2	32519	ALUMINUM ADJUSTABLE ANGLE BACK 18"-21" (M)	-	1
3	32037	LOWER ADJUSTABLE BACKREST (M)	1	1
4	90663	BUTTON HEAD CAP SCREW M6X1 X 25mm LONG, FULLY THREADED	2	2

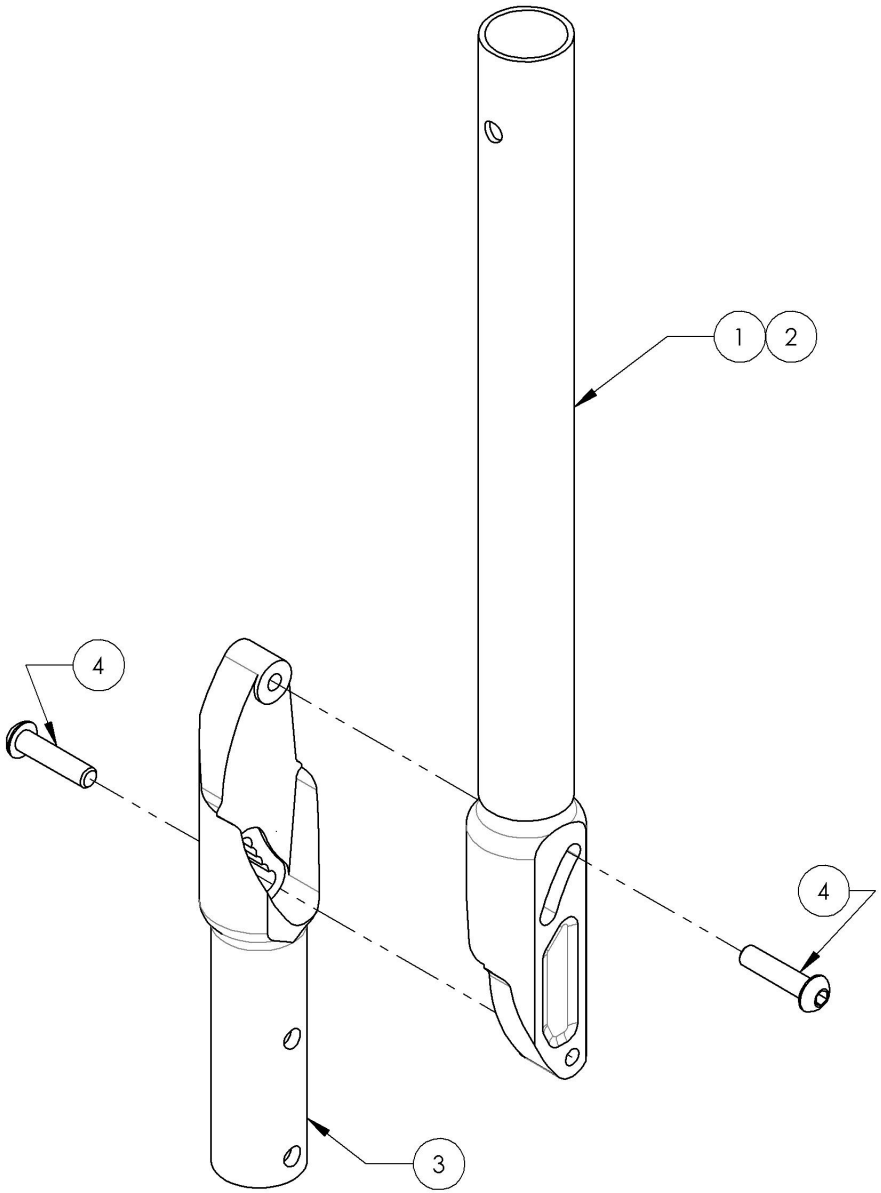

9001271
Back Cane - Aluminum,
Angle Adjustable,
Straight, 15-18 in

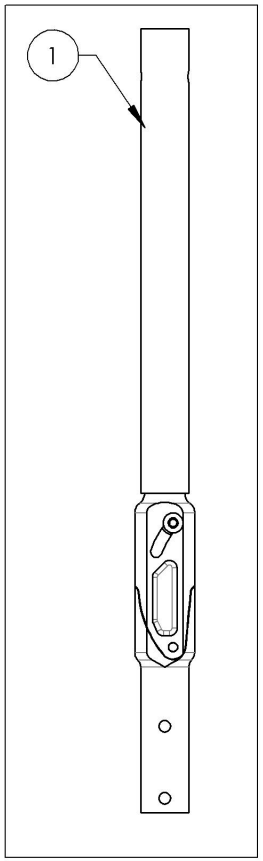

9001272
Back Cane - Aluminum,
Angle Adjustable,
Straight, 18-21 in

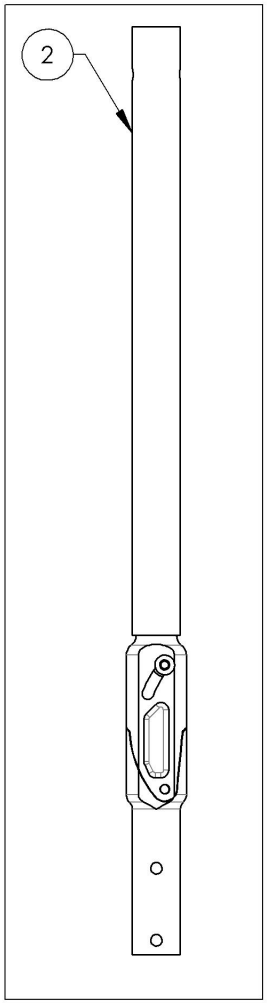

MAKE SURE TO HAVE YOUR SERIAL NUMBER NEARBY WHEN ORDERING PARTS FOR YOUR MOTION COMPOSITES WHEELCHAIR

9001273_9001274
Back Cane - Aluminum, Angle adjustable, 8˚ bend

ITEM NO.	PARTNO	DESCRIPTION	9001273 /QTY.	9001274 /QTY.
1	32528	ALUMINUM ADJUSTABLE ANGLE 8° BEND BACK CANE 15"-18" (M)	1	-
2	32529	ALUMINUM ADJUSTABLE ANGLE 8° BEND BACK CANE 18"-21"(M)	-	1
3	32037	LOWER ADJUSTABLE BACKREST (M)	1	1
4	90663	BUTTON HEAD CAP SCREW M6X1 X 25mm LONG, FULLY THREADED	2	2

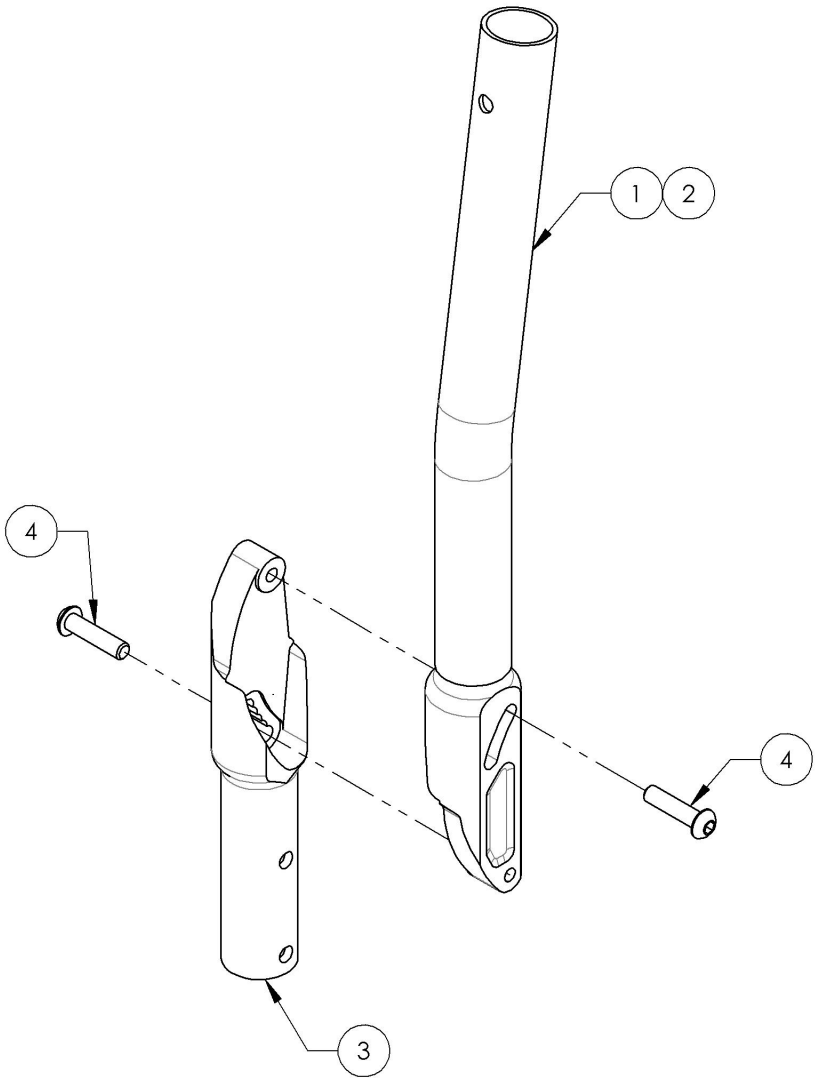

9001273
Back Cane - Aluminum, Angle Adjustable, 8° bend, 15-18 in

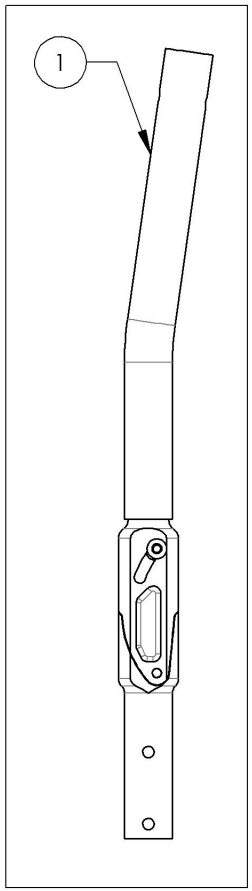

9001274
Back Cane - Aluminum, Angle Adjustable, 8° bend, 18-21 in

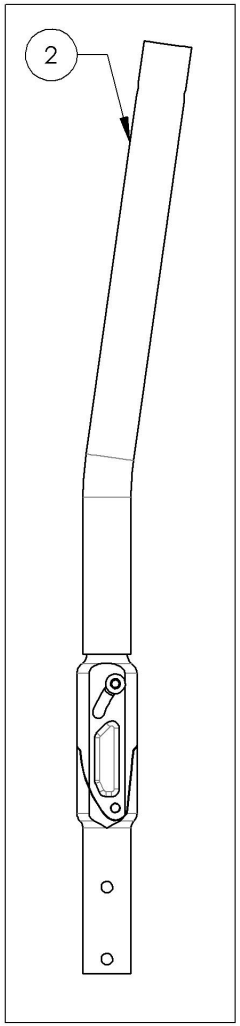

MAKE SURE TO HAVE YOUR SERIAL NUMBER NEARBY WHEN ORDERING PARTS FOR YOUR MOTION COMPOSITES WHEELCHAIR

Backrest Catalogue
Push Handles & Straight Extension

ITEM NO.	PARTNO	DESCRIPTION	QTY
1	9001286	Without Push Handle - Straight Extension	1
2	9001285	Push Handle - Adjustable	1
3	9002915	HD Push Handle - Adjustable	1
4	9003095	Push Handle - Fold Down, Adjustable	1

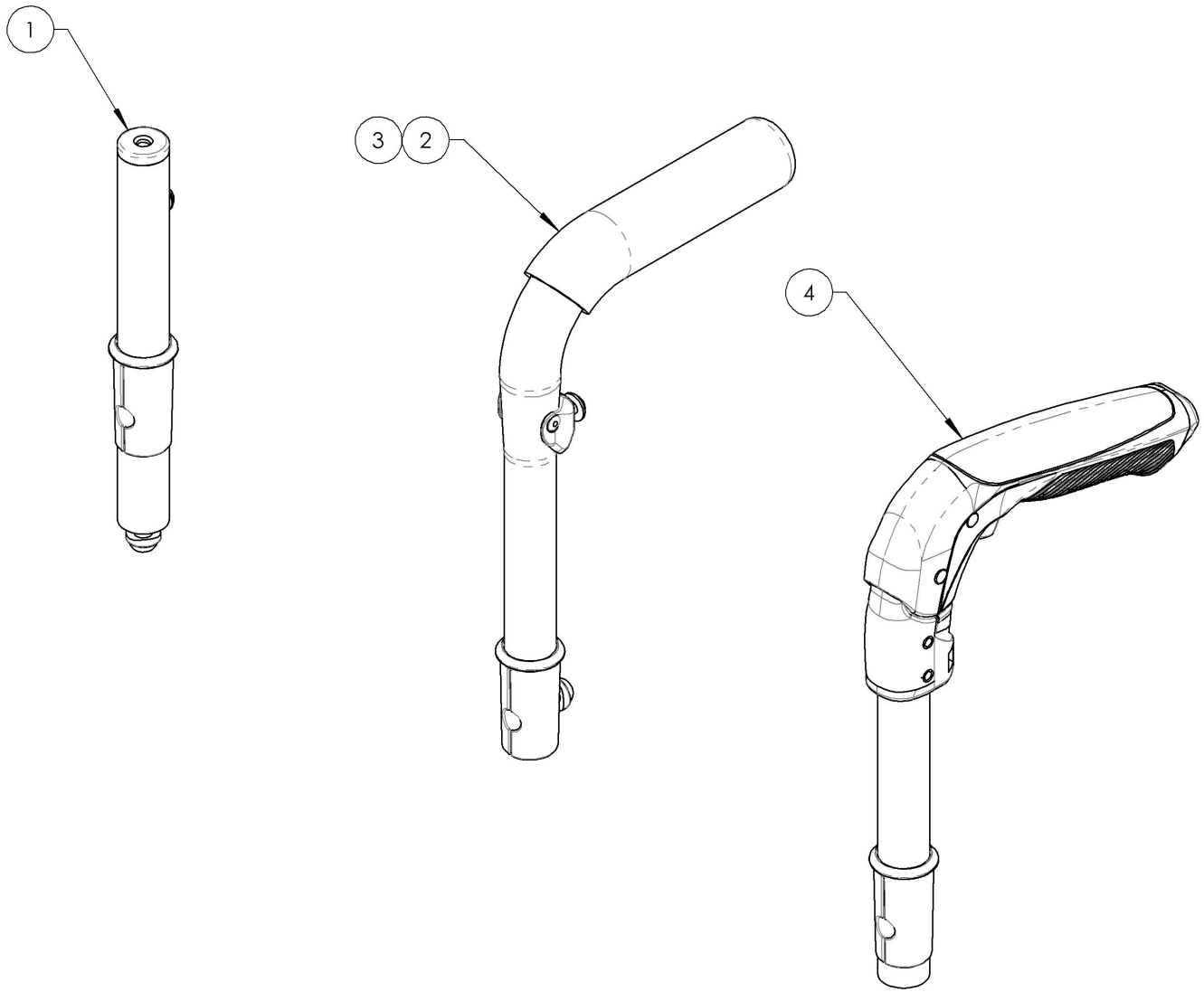

MAKE SURE TO HAVE YOUR SERIAL NUMBER NEARBY WHEN ORDERING PARTS FOR YOUR MOTION COMPOSITES WHEELCHAIR

9001286
Without Push Handle - Straight Extension

ITEM NO.	PARTNO	DESCRIPTION	9001286 /QTY.	REPLACEMENT PART/QTY.
1	32506	BACK EXTENSION - ASSEMBLY (M)	1	-
2	32017	PUSH HANDLE BACK SLEEVE	1	-
3	32514	DOWEL NUT PUSH HANDLE - ASSEMBLY (M)	-	1

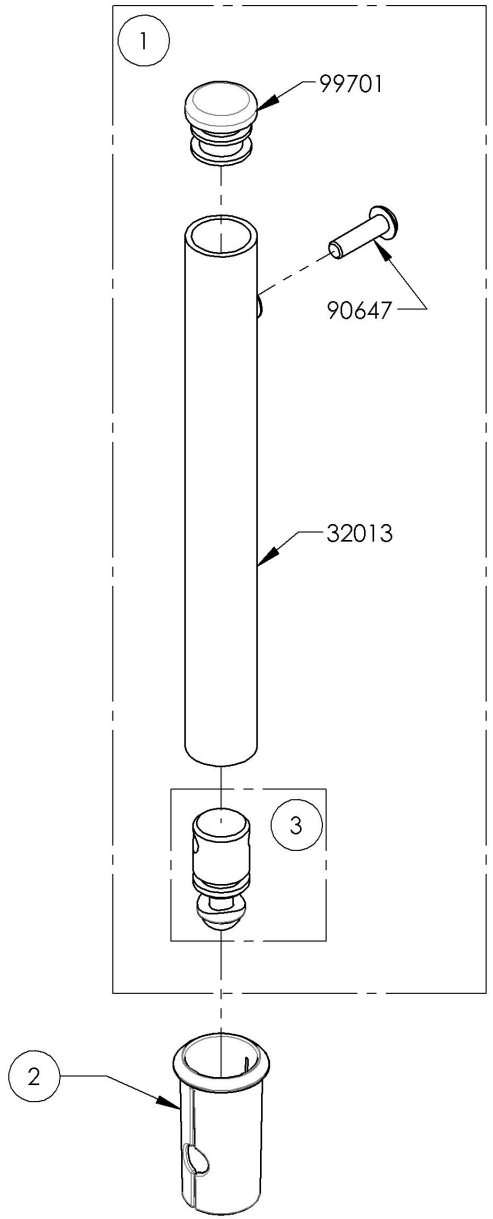

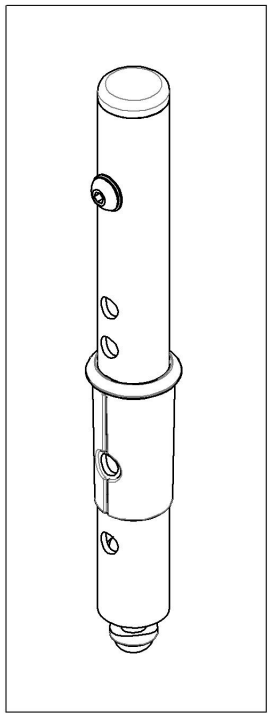

MAKE SURE TO HAVE YOUR SERIAL NUMBER NEARBY WHEN ORDERING PARTS FOR YOUR MOTION COMPOSITES WHEELCHAIR

9001285 & 9002915
Standard & HD Push Handle - Adjustable

ITEM NO.	PARTNO	DESCRIPTION	9001285 /QTY.	9002915 /QTY.	REPLACEMENT PARTS/QTY.
1	32507	7_8" PUSH HANDLE - ASSEMBLY (M)	1	-	-
2	32533	7_8 in HD PUSH HANDLE - ASSEMBLY	-	1	-
3	32017	PUSH HANDLE BACK SLEEVE	1	1	-
4	32514	DOWEL NUT PUSH HANDLE - ASSEMBLY (M)	-	-	1

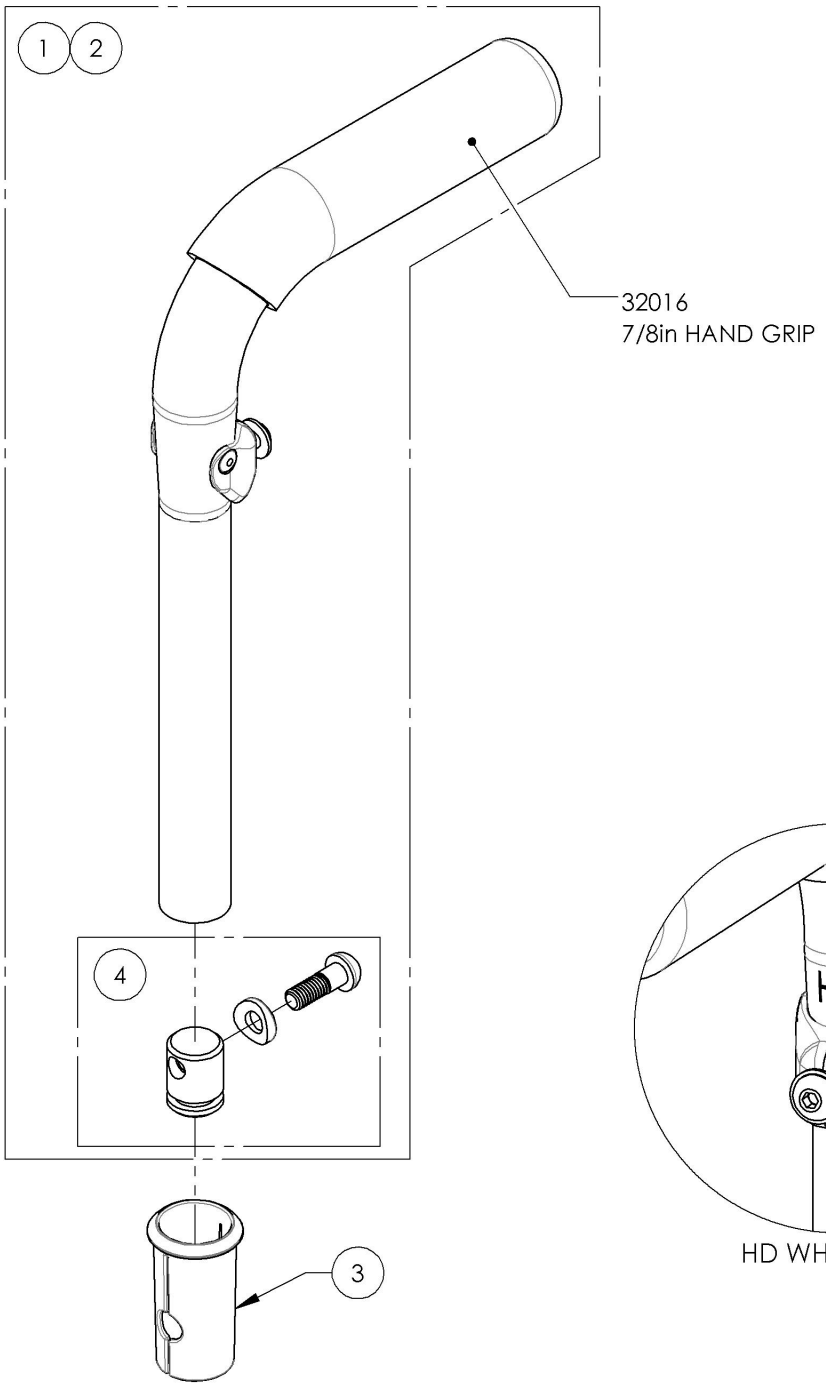

9001285
Push Handle - Adjustable

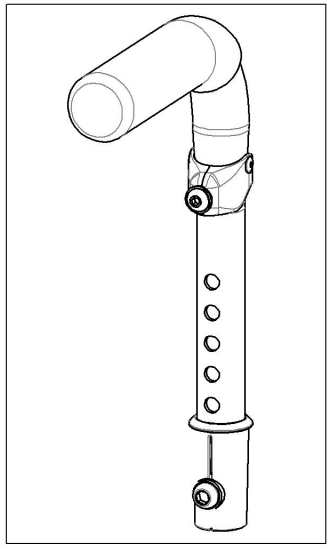

9002915
HD Push Handle - Adjustable

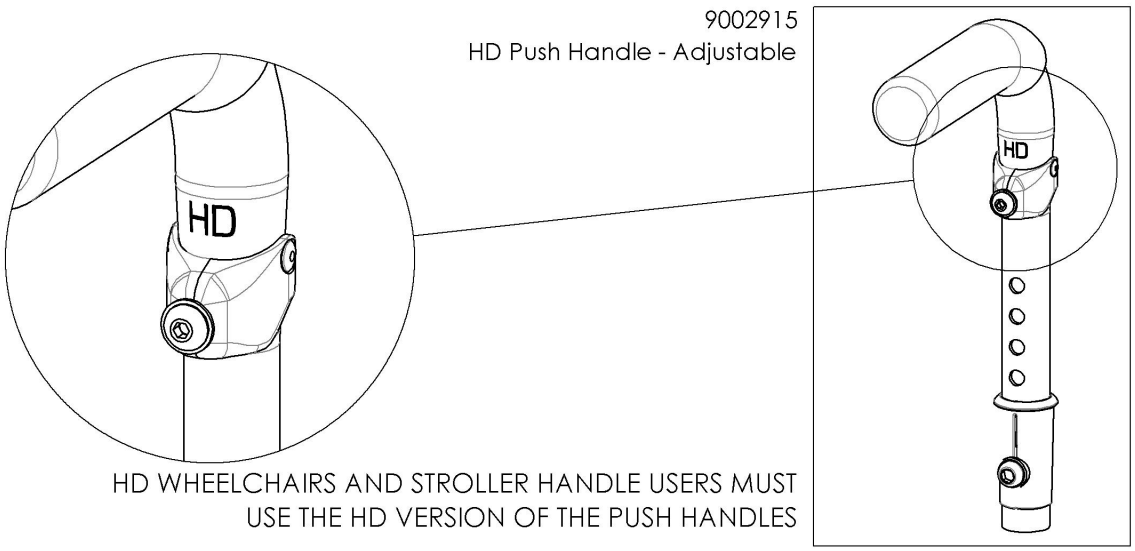

HD WHEELCHAIRS AND STROLLER HANDLE USERS MUST USE THE HD VERSION OF THE PUSH HANDLES

MAKE SURE TO HAVE YOUR SERIAL NUMBER NEARBY WHEN ORDERING PARTS FOR YOUR MOTION COMPOSITES WHEELCHAIR

9003095
Push Handle - Fold Down, Adjustable

ITEM NO.	PARTNO	DESCRIPTION	9003095 /QTY.	REPLACEMENT PARTS/QTY.
1	32542	FOLD DOWN PUSH HANDLE - ASSEMBLY	1	-
2	32017	PUSH HANDLE BACK SLEEVE	1	-
3	32514	DOWEL NUT PUSH HANDLE - ASSEMBLY (M)	-	1

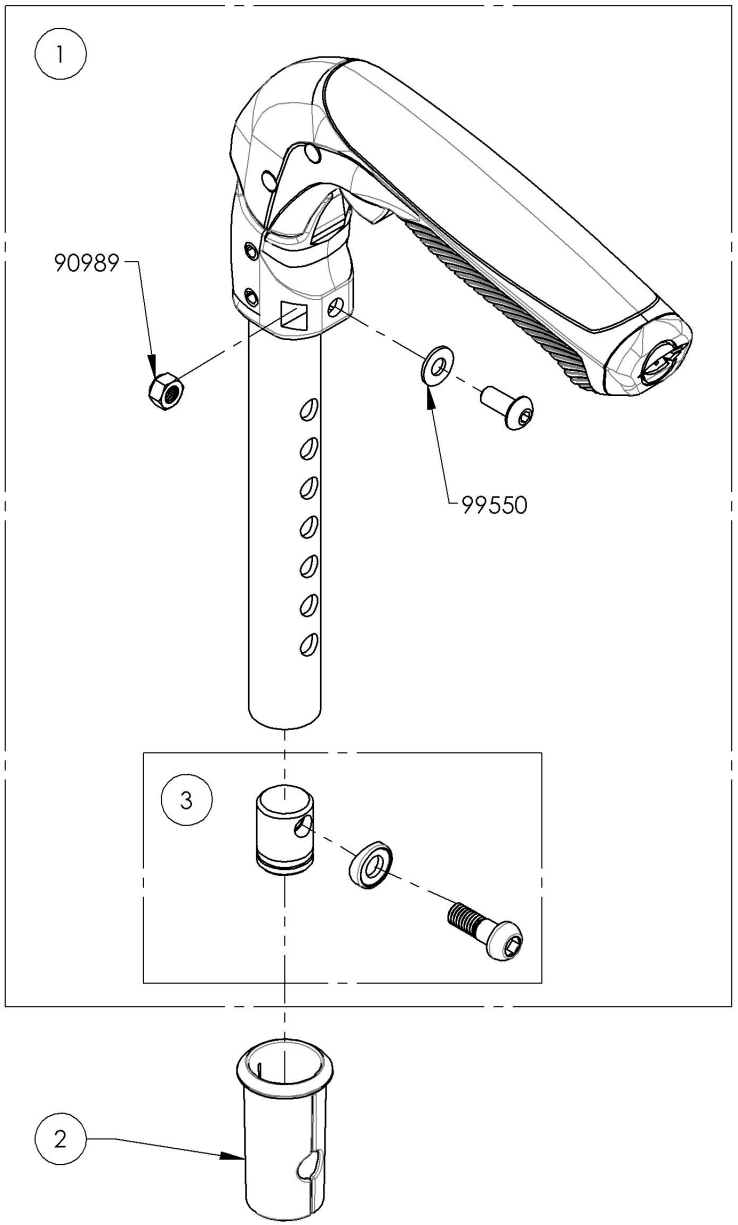

9003095
Push Handle - Fold Down, Adjustable

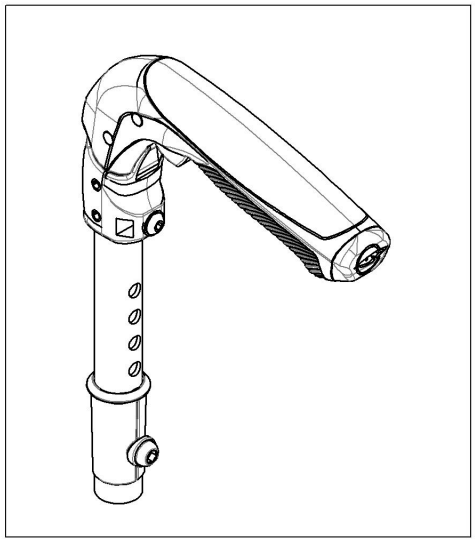

MAKE SURE TO HAVE YOUR SERIAL NUMBER NEARBY WHEN ORDERING PARTS FOR YOUR MOTION COMPOSITES WHEELCHAIR

Backrests Catalogue
Integrated Push Handle Back Canes

ITEM NO.	PARTNO	DESCRIPTION	QTY
1*	9003298	Back Cane - Aluminium, Straight + Integrated Push Handle, 9-15 in	1
2*	9003299	Back Cane - Aluminium, Straight + Integrated Push Handle, 15-21 in	1
3	9001275	Back Cane - Aluminium, 8° bend + Integrated Push Handle, 16, 18 or 20 in	1
4	9001276	Back Cane - Aluminum, Angle Adjustable, 8° bend + Integrated Push Handle, 16 in	1
5	9001277	Back Cane - Aluminum, Angle Adjustable, 8° bend + Integrated Push Handle, 20 in	1
6	9001003	Back Cane - Sleeve for Integrated Push Handle	1

*NOTE: USE SLEEVE **#9001003** IF ANY OF THESE OPTIONS WILL BE INSTALLED WITH ALUMINUM STRAIGHT BACK CANES WITH INTEGRATED PUSH HANDLE (**#9003298 OR #9003299**)

1. STROLLER HANDLE (**#9001605 TO #9001613**)
2. NEWTON STABILIZER BAR (**#9001594 TO #9001604**)

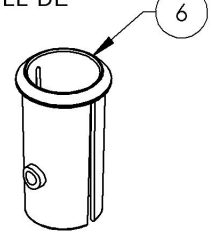

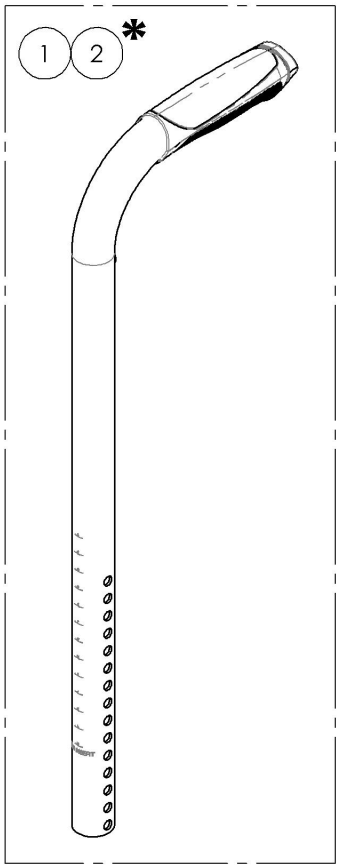

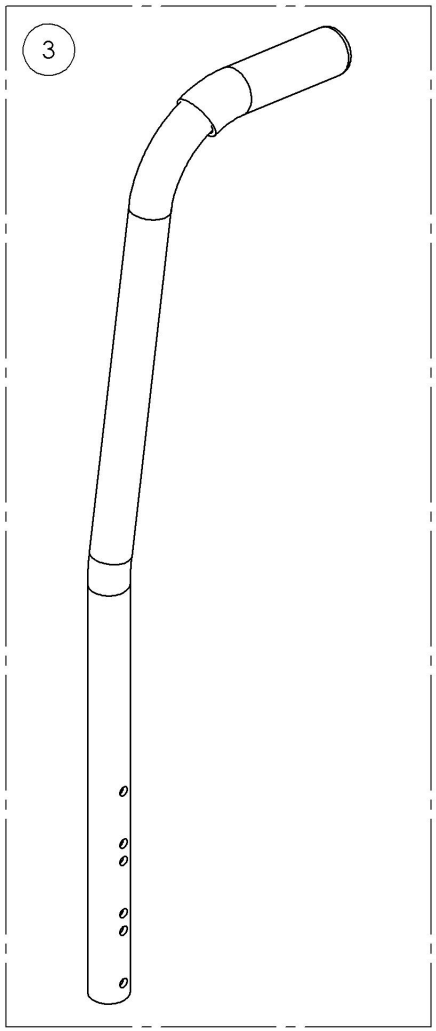

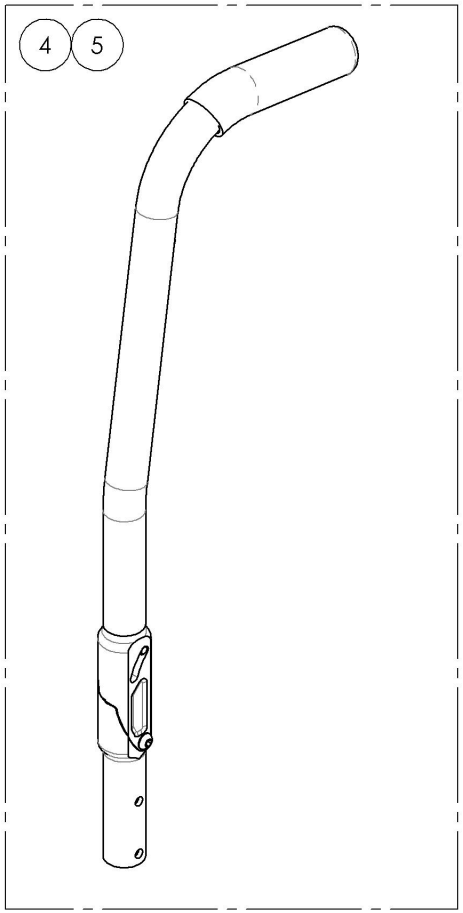

MAKE SURE TO HAVE YOUR SERIAL NUMBER NEARBY WHEN ORDERING PARTS FOR YOUR MOTION COMPOSITES WHEELCHAIR

9003298_9003299
Back Cane - Aluminium, Straight + Integrated Push Handle

ITEM NO.	PARTNO	DESCRIPTION	9003298 /QTY.	9003299 /QTY.
1	32539	ALU STRAIGHT BACK CANE 9-15in WITH FIXED PUSH HANDLE - ASSY	1	-
2	32540	ALU STRAIGHT BACK CANE 15-21in WITH FIXED PUSH HANDLE - ASSY	-	1
3	90647	BUTTON HEAD CAP SCREW M5X0.8 X 18mm LONG, FULLY THREADED + BLUE THREADLOCKER - BLACK ZINC	1	1

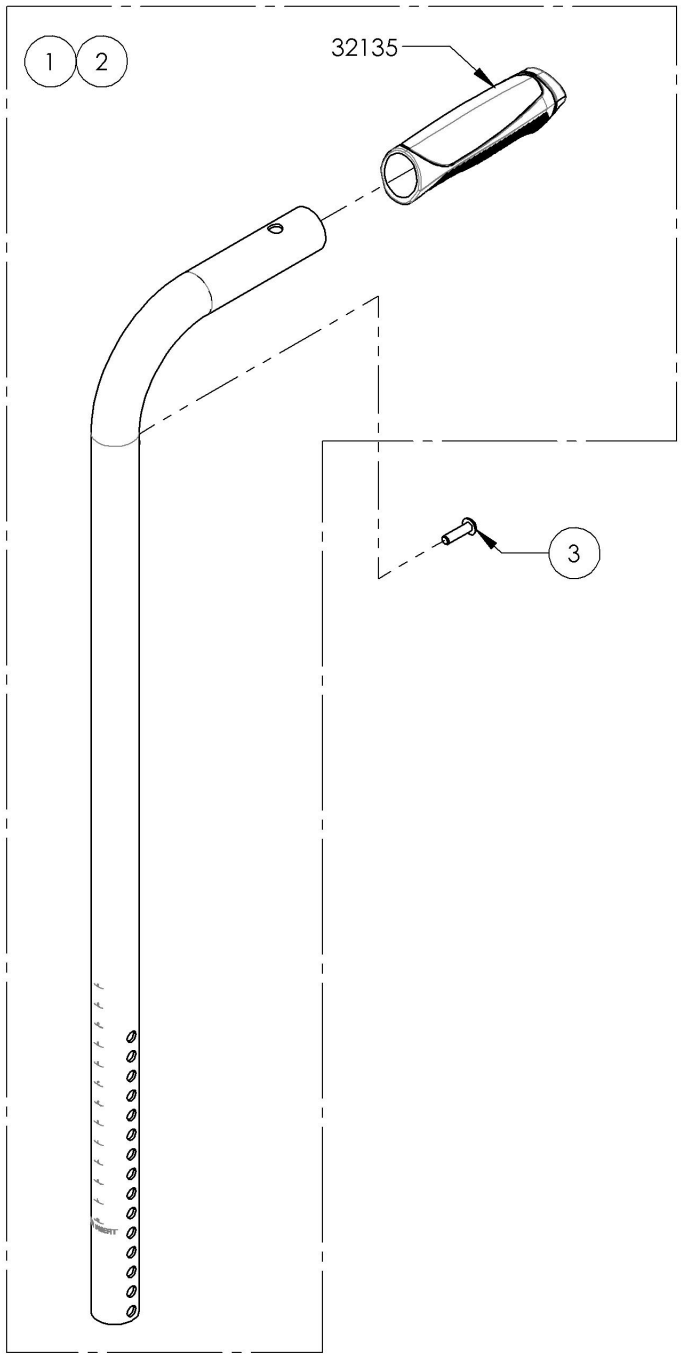

9003298
Back Cane - Aluminium, Straight + Integrated Push Handle, 9-15 in

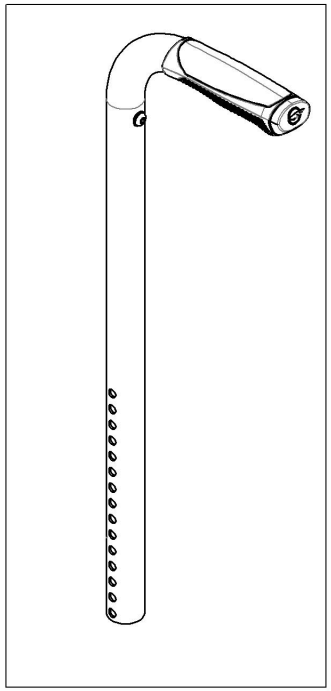

9003299
Back Cane - Aluminium, Straight + Integrated Push Handle, 15-21 in

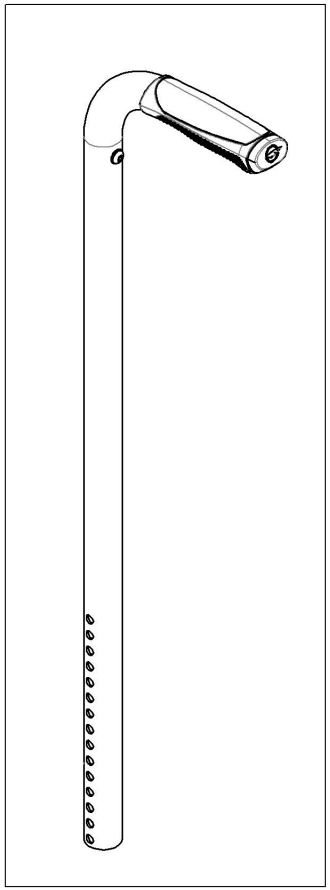

MAKE SURE TO HAVE YOUR SERIAL NUMBER NEARBY WHEN ORDERING PARTS FOR YOUR MOTION COMPOSITES WHEELCHAIR

9001275
Back Cane - Aluminium, 8˚ bend + Integrated Push Handle, 16, 18 or 20 in

ITEM NO.	PARTNO	DESCRIPTION	9001275 /QTY.
1	32500	ALU 8 DEG BACK CANE 16, 18 OR 20 in WITH FIXED PUSH HANDLE - ASSEMBLY (M)	1
2	90647	BUTTON HEAD CAP SCREW M5X0.8 X 18mm LONG, FULLY THREADED + BLUE THREADLOCKER - BLACK ZINC	1

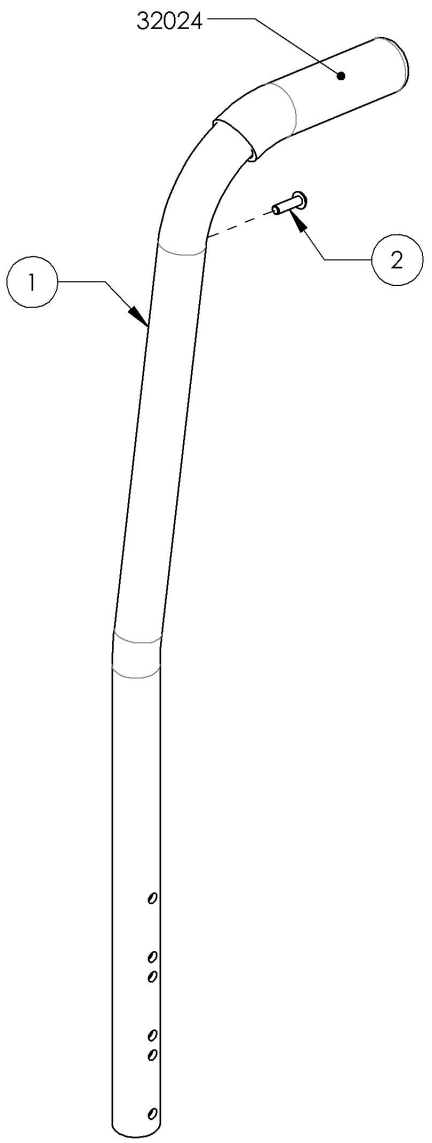

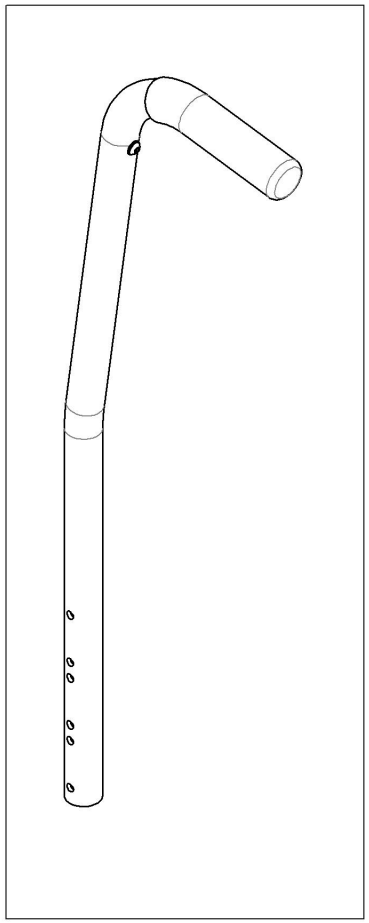

MAKE SURE TO HAVE YOUR SERIAL NUMBER NEARBY WHEN ORDERING PARTS FOR YOUR MOTION COMPOSITES WHEELCHAIR

9001276_9001277
Back Cane - Aluminum, Angle adjustable, 8˚ bend + Integrated Push Handle

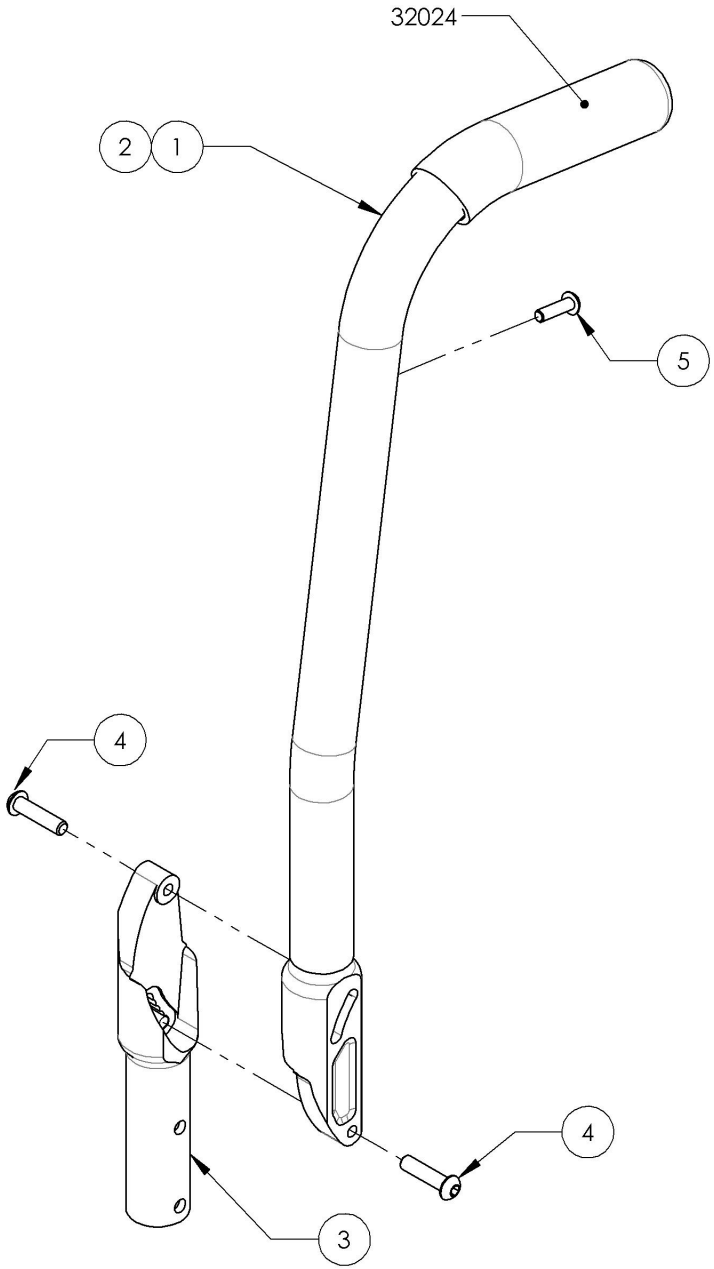

ITEM NO.	PARTNO	DESCRIPTION	9001276 /QTY.	9001277 /QTY.
1	32501	ALUMINIUM ADJUSTABLE ANGLE BACK 16" W_ FIXED PUSH HANDLE - ASSEMBLY (M)	1	-
2	32502	ALUMINIUM ADJUSTABLE ANGLE BACK 20" W_ FIXED PUSH HANDLE - ASSEMBLY (M)	-	1
3	32037	LOWER ADJUSTABLE BACKREST (M)	1	1
4	90663	BUTTON HEAD CAP SCREW M6X1 X 25mm LONG, FULLY THREADED	2	2
5	90647	BUTTON HEAD CAP SCREW M5X0.8 X 18mm LONG, FULLY THREADED + BLUE THREADLOCKER - BLACK ZINC	1	1

9001276
Back Cane - Aluminum, Angle Adjustable, 8° bend + Integrated Push Handle, 16 in

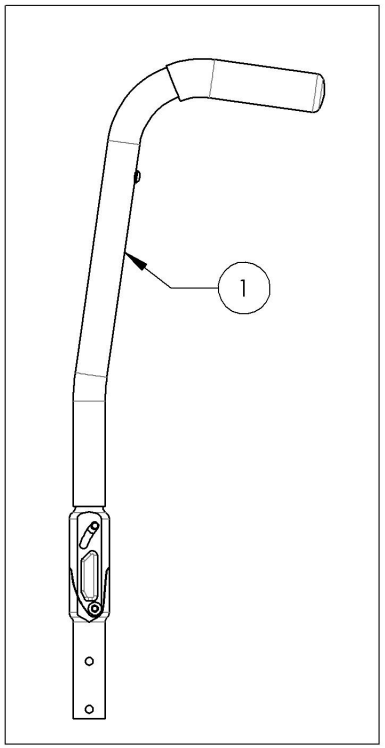

9001277
Back Cane - Aluminum, Angle Adjustable, 8° bend + Integrated Push Handle, 20 in

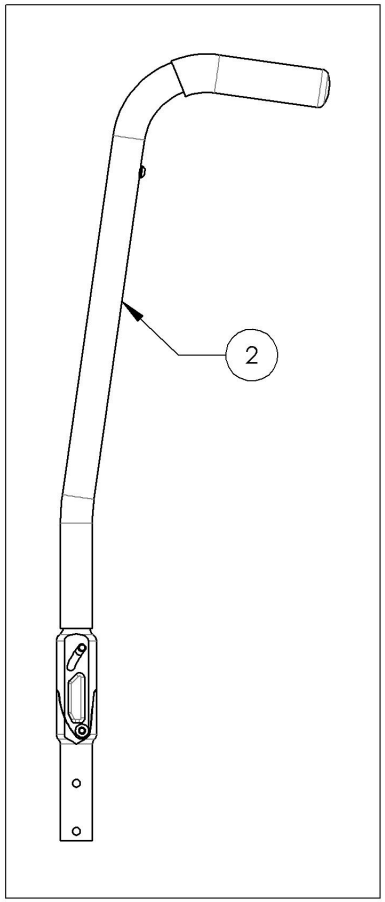

MAKE SURE TO HAVE YOUR SERIAL NUMBER NEARBY WHEN ORDERING PARTS FOR YOUR MOTION COMPOSITES WHEELCHAIR

Backrests Catalogue
Back Cane Hardware (Carbon Frame)

ITEM NO.	PARTNO	DESCRIPTION	QTY.
1	9001233	Back Cane - Hardware, With Tie Down for Flip Back Armrest	1
2	9001234	Back Cane - Hardware, Without Tie Down for Flip Back Armrest	1
3	9001235	Back Cane - Hardware, With Tie Down for T Armrest, Side Guards, Mud Guards, Locking Flip-Up Armrest, No Armrest	1
4	9001236	Back Cane - Hardware, Without Tie Down for T Armrest, Side Guards, Mud Guards, Locking Flip-Up Armrest, No Armrest	1
5	9001625	Tie Down - Rear, Wheelchair Transit	1

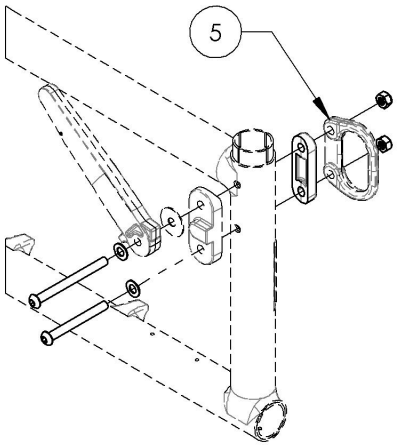

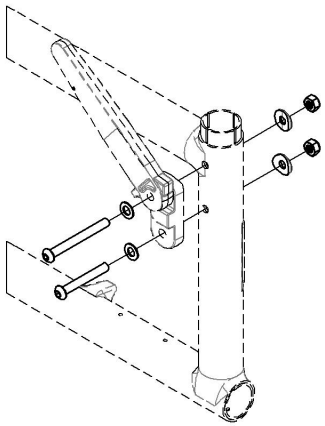

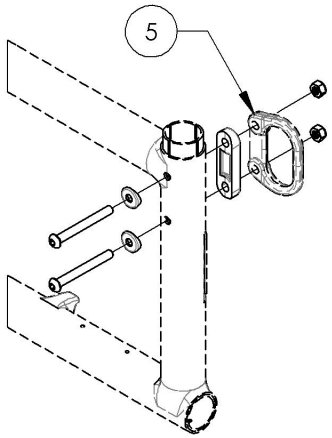

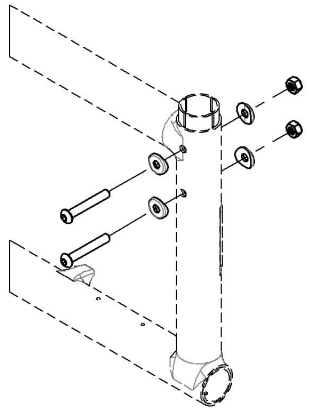

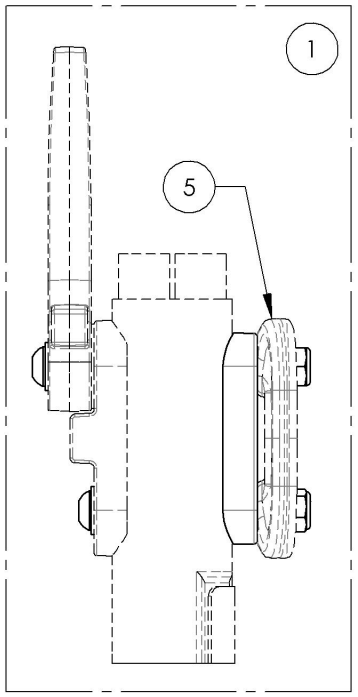

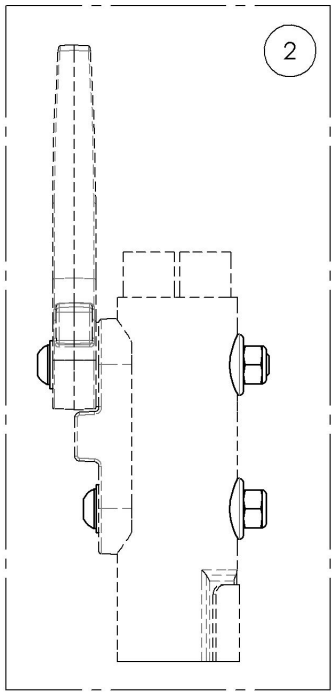

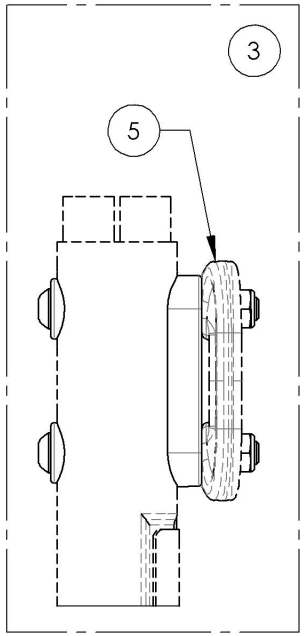

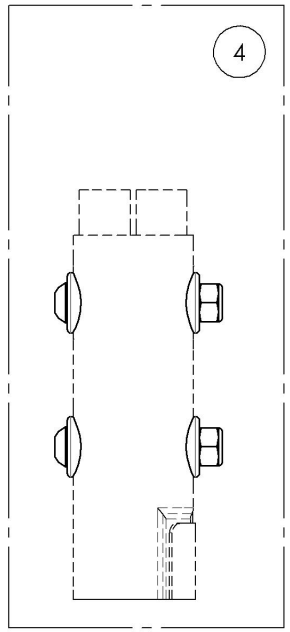

MAKE SURE TO HAVE YOUR SERIAL NUMBER NEARBY WHEN ORDERING PARTS FOR YOUR MOTION COMPOSITES WHEELCHAIR

9001233
Back Cane - Hardware, With Tie Down for Flip Back Armrest

ITEM NO.	PARTNO	DESCRIPTION	9001233 /QTY.
1	90982	BUTTON HEAD CAP SCREW M6X1 X 70mm LONG, 24mm THREADED + BLUE THREADLOCKER - BLACK ZINC	1
2	90670	BUTTON HEAD CAP SCREW M6X1 X 58mm LONG, 24mm THREADED + BLUE THREADLOCKER - BLACK ZINC	1
3	99560	WASHER 1/4 17/64 ID X 1/2 OD X .032 THK	2
4	32066	DOUBLE COVED WASHER	1
5	99512	M6 LOW NYLON LOCK	2

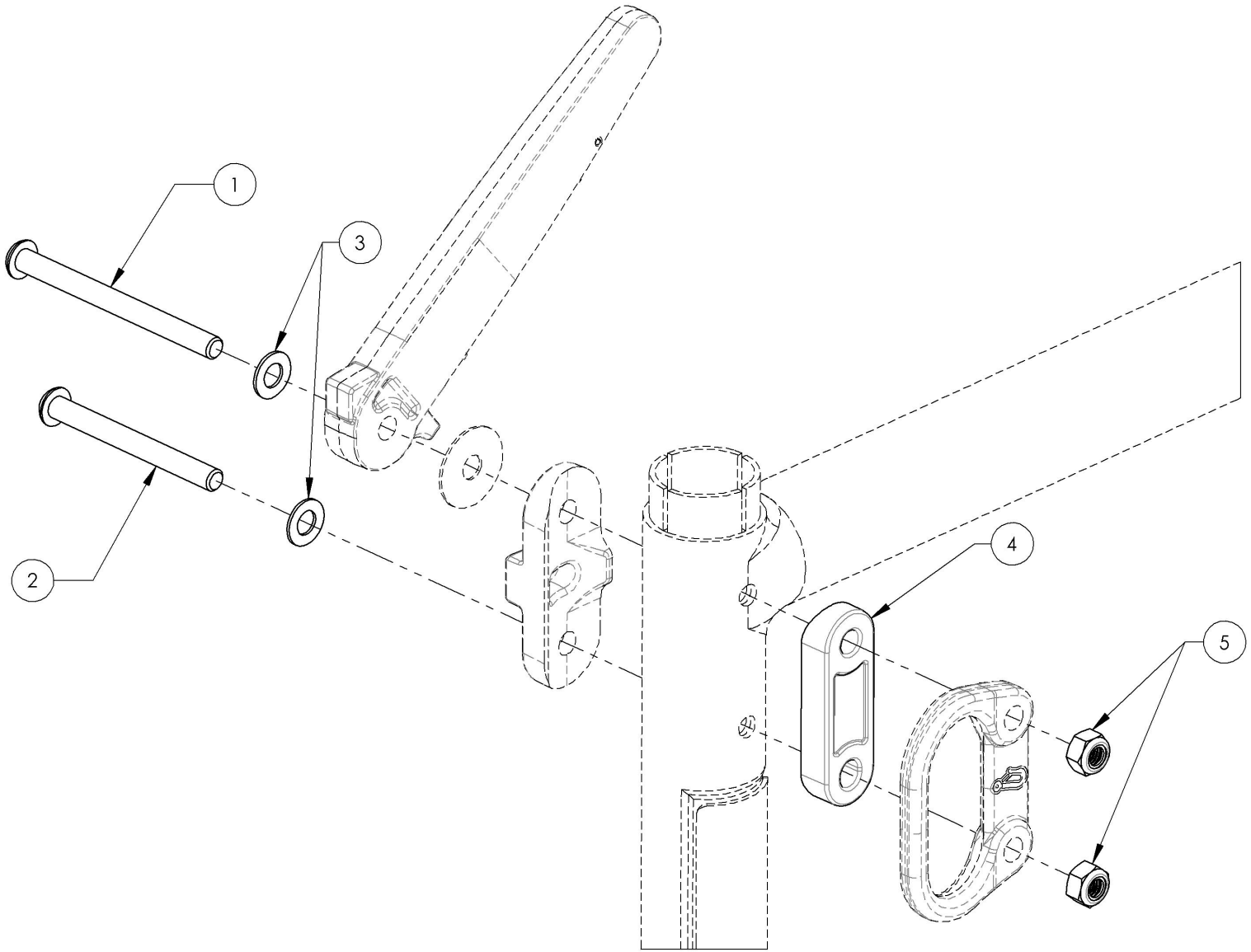

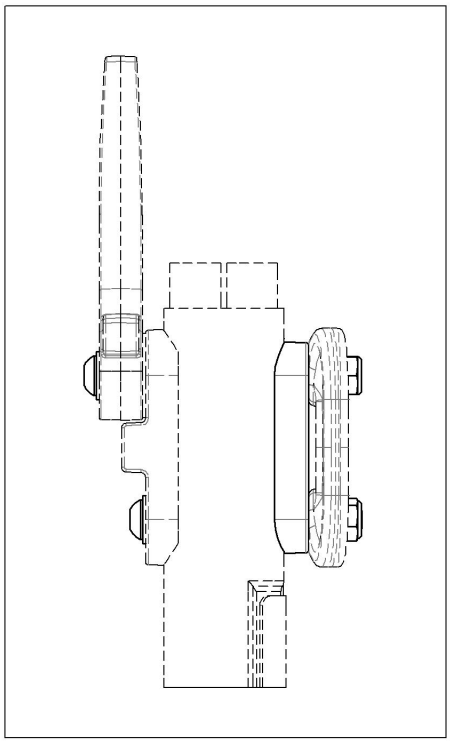

MAKE SURE TO HAVE YOUR SERIAL NUMBER NEARBY WHEN ORDERING PARTS FOR YOUR MOTION COMPOSITES WHEELCHAIR

9001234
Back Cane - Hardware, Without Tie Down for Flip Back Armrest

ITEM NO.	PARTNO	DESCRIPTION	9001234 /QTY.
1	90670	BUTTON HEAD CAP SCREW M6X1 X 58mm LONG, 24mm THREADED + BLUE THREADLOCKER - BLACK ZINC	1
2	90667	BUTTON HEAD CAP SCREW M6X1 X 45mm LONG, 24mm THREADED + BLUE THREADLOCKER - BLACK ZINC	1
3	99560	WASHER 1/4 17/64 ID X 1/2 OD X .032 THK	2
4	32089	ALU SEMI COVED WASHER	1
5	31179	V2 FOOTREST COVED WASHER	1
6	99512	M6 LOW NYLON LOCK	2

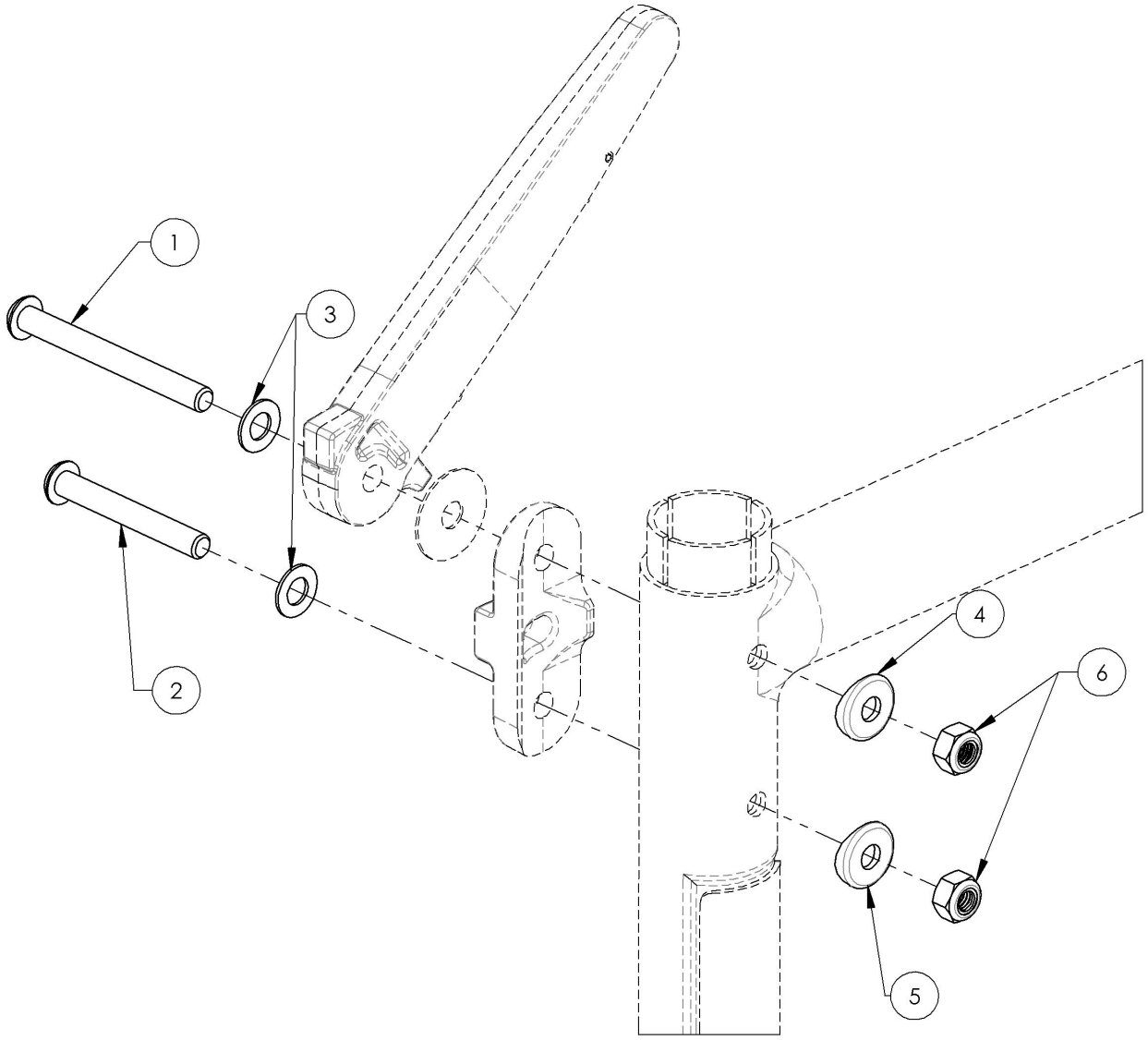

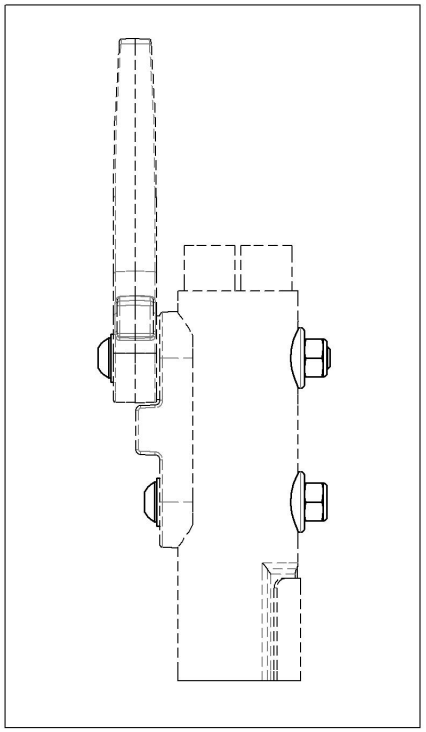

MAKE SURE TO HAVE YOUR SERIAL NUMBER NEARBY WHEN ORDERING PARTS FOR YOUR MOTION COMPOSITES WHEELCHAIR

9001235
Back Cane - Hardware, With Tie Down for T Armrest, Side Guards, Mud Guards, Locking Flip-Up Armrest, No Armrest

ITEM NO.	PARTNO	DESCRIPTION	9001235 /QTY.
1	90669	BUTTON HEAD CAP SCREW M6X1 X 55mm LONG, 24mm THREADED + BLUE THREADLOCKER - BLACK ZINC	2
2	32089	ALU SEMI COVED WASHER	1
3	31179	V2 FOOTREST COVED WASHER	1
4	32066	DOUBLE COVED WASHER	1
5	99512	M6 LOW NYLON LOCK	2

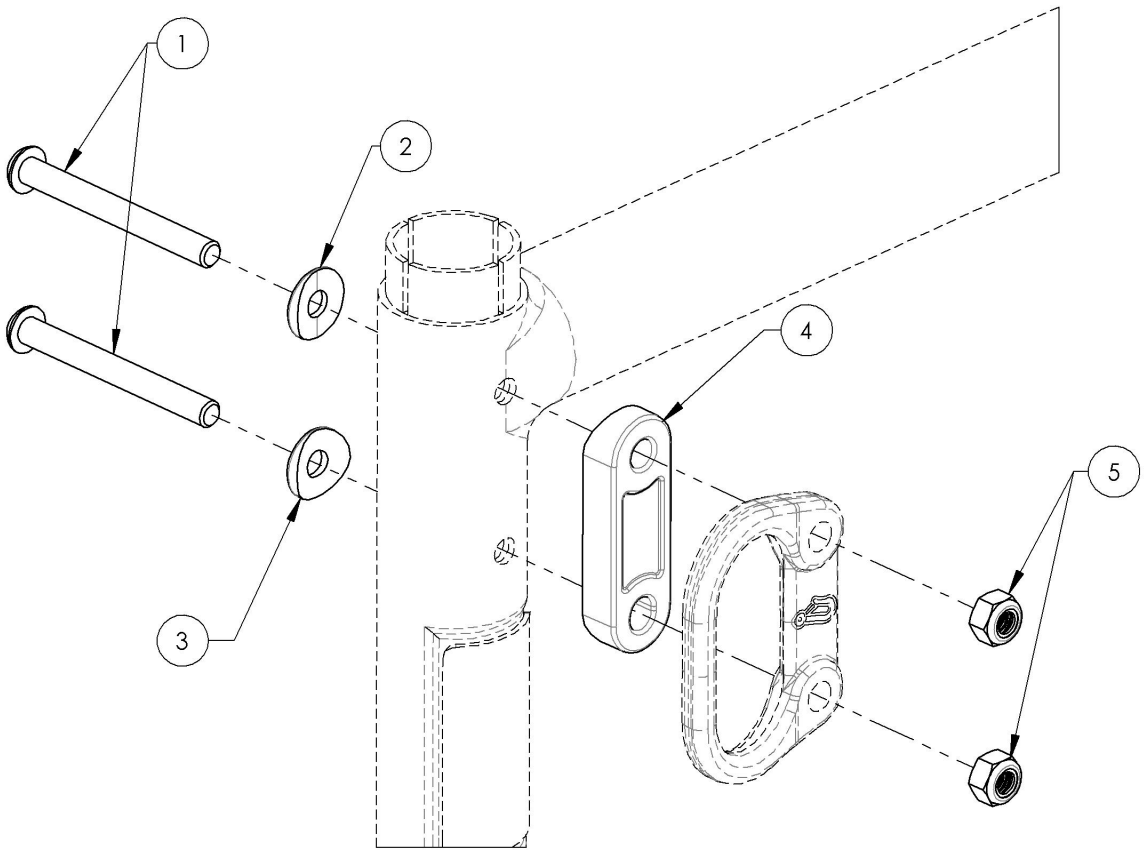

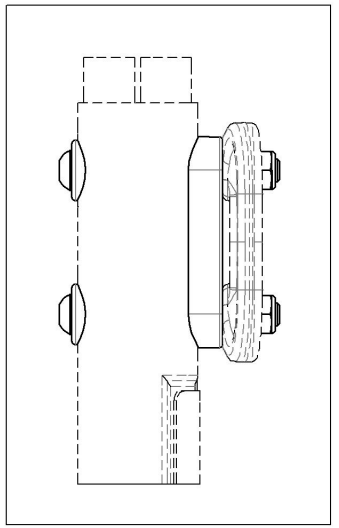

MAKE SURE TO HAVE YOUR SERIAL NUMBER NEARBY WHEN ORDERING PARTS FOR YOUR MOTION COMPOSITES WHEELCHAIR

9001236
Back Cane - Hardware, Without Tie Down for T Armrest, Side Guards, Mud Guards, Locking Flip-Up Armrest, No Armrest

ITEM NO.	PARTNO	DESCRIPTION	9001236 /QTY.
1	90666	BUTTON HEAD CAP SCREW M6X1 X 40mm LONG, 24mm THREADED + BLUE THREADLOCKER - BLACK ZINC	2
2	32089	ALU SEMI COVED WASHER	2
3	31179	V2 FOOTREST COVED WASHER	2
4	99512	M6 LOW NYLON LOCK	2

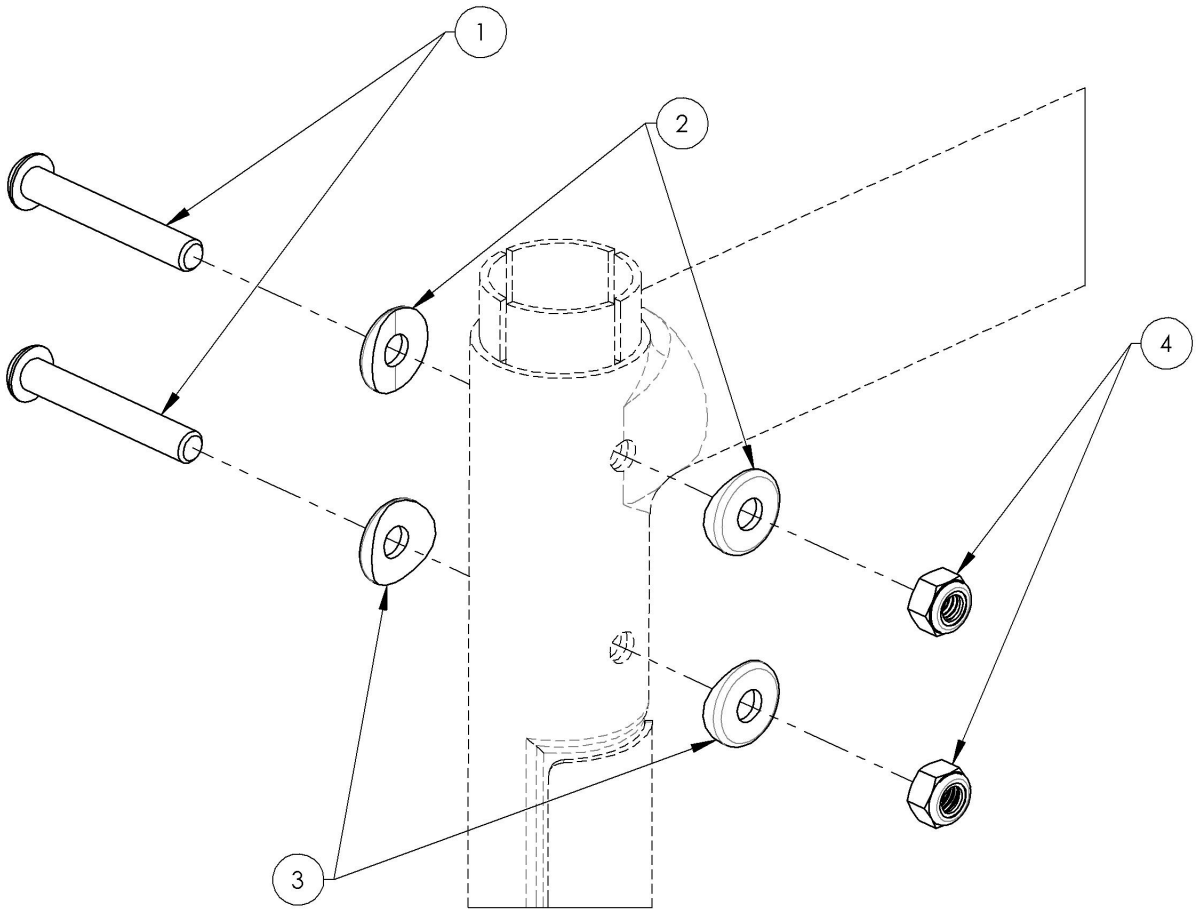

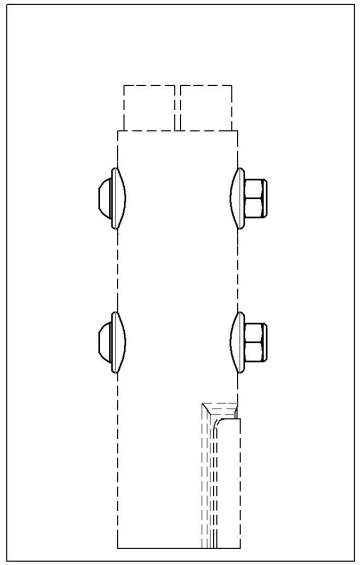

MAKE SURE TO HAVE YOUR SERIAL NUMBER NEARBY WHEN ORDERING PARTS FOR YOUR MOTION COMPOSITES WHEELCHAIR

9001625
Tie Down - Rear, Wheelchair Transit

ITEM NO.	PARTNO	DESCRIPTION	9001625 /QTY.
1	22004	FRONT TIE DOWN	1

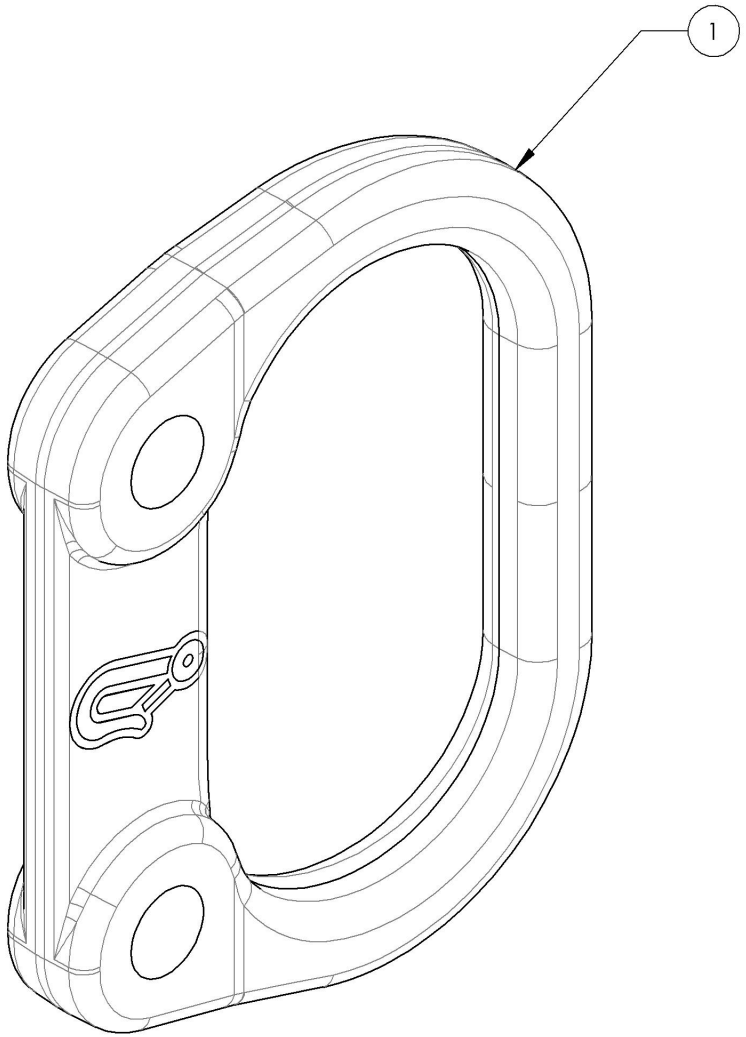

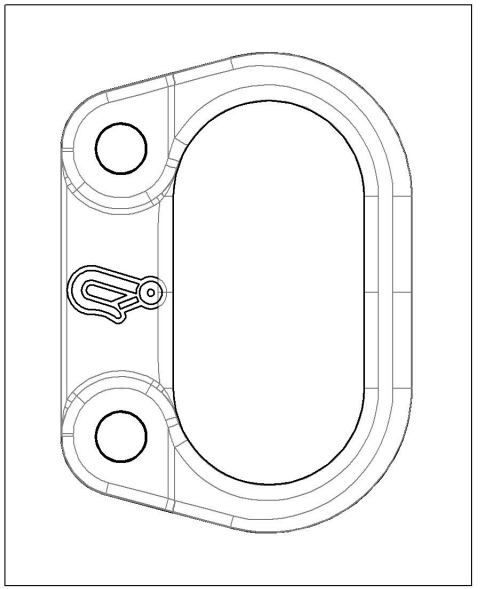

MAKE SURE TO HAVE YOUR SERIAL NUMBER NEARBY WHEN ORDERING PARTS FOR YOUR MOTION COMPOSITES WHEELCHAIR

Backrests Catalogue
Back Cane Hardware (L Type Armrest)

ITEM NO.	PARTNO	DESCRIPTION	QTY.
1	9007624	Hardware - For Swing Away Armrest, With Tie Down	1
2	9007625	Hardware - For Swing Away Armrest, Without Tie Down	1
3	9001625	Tie Down - Rear, Wheelchair Transit	1

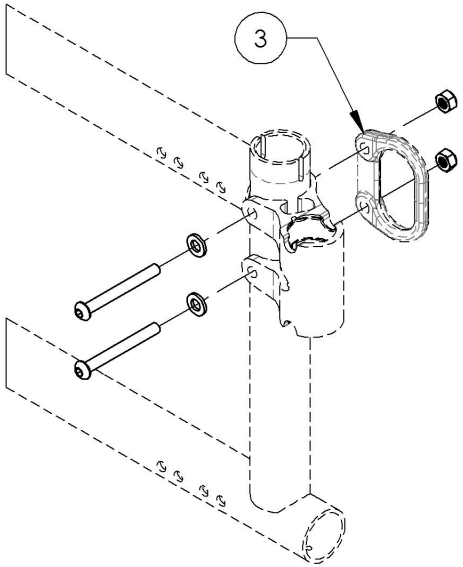

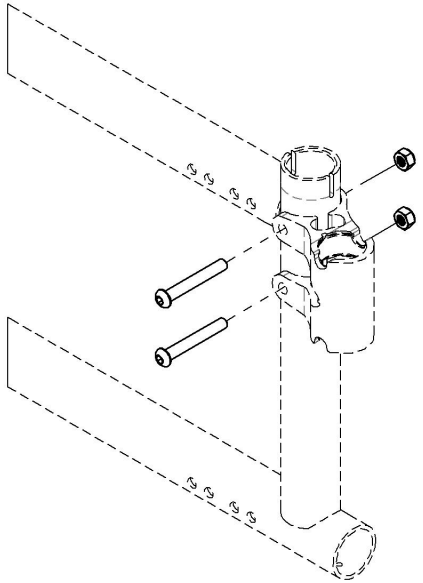

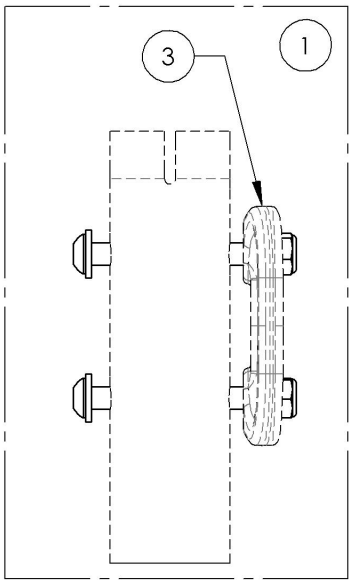

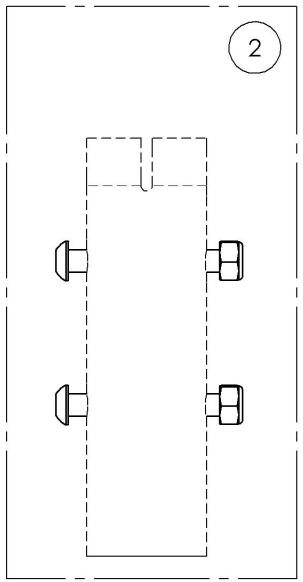

MAKE SURE TO HAVE YOUR SERIAL NUMBER NEARBY WHEN ORDERING PARTS FOR YOUR MOTION COMPOSITES WHEELCHAIR

9007624
Hardware - For Swing Away Armrest, With Tie Down

ITEM NO.	PARTNO	DESCRIPTION	9007624 /QTY.
1	90669	BUTTON HEAD CAP SCREW M6X1 X 55mm LONG, 24mm THREADED + BLUE THREADLOCKER - BLACK ZINC	2
2	99562	WASHER 1/4 17/64 ID X 5/8 OD X .062 THK	2
3	99512	M6 LOW NYLON LOCK	2

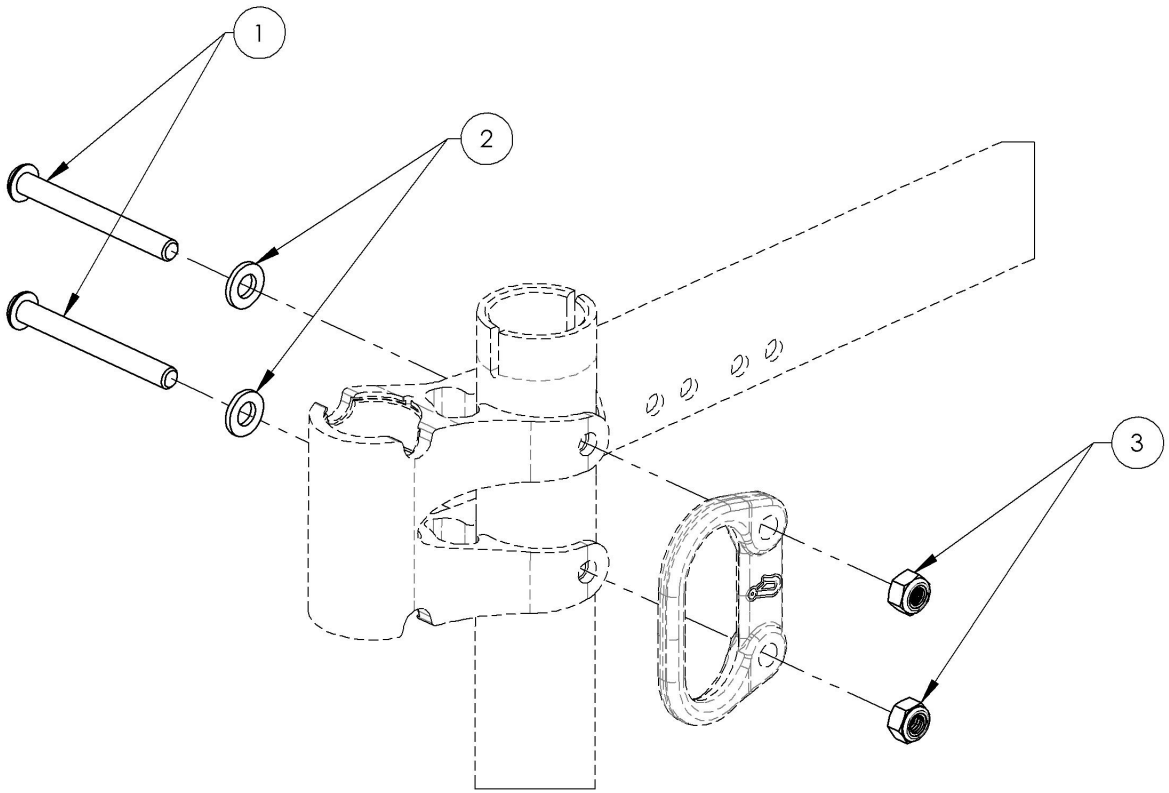

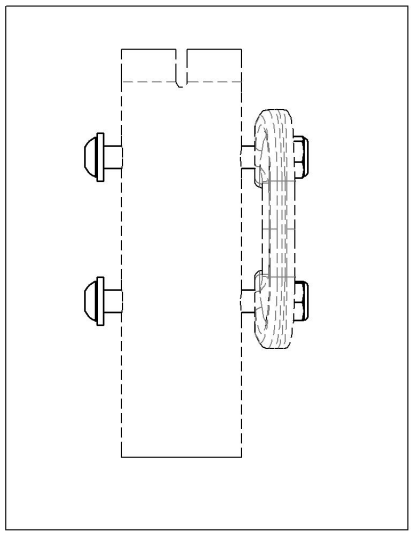

MAKE SURE TO HAVE YOUR SERIAL NUMBER NEARBY WHEN ORDERING PARTS FOR YOUR MOTION COMPOSITES WHEELCHAIR

9007625
Hardware - For Swing Away Armrest, Without Tie Down

ITEM NO.	PARTNO	DESCRIPTION	9007625 /QTY.
1	90667	BUTTON HEAD CAP SCREW M6X1 X 45mm LONG, 24mm THREADED + BLUE THREADLOCKER - BLACK ZINC	2
2	99512	M6 LOW NYLON LOCK	2

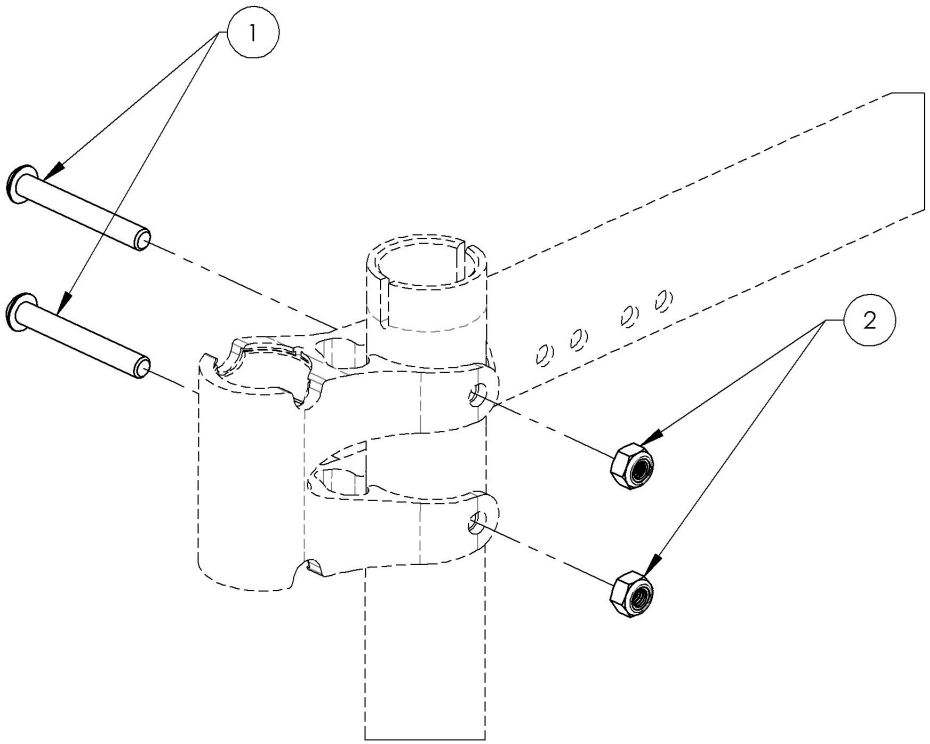

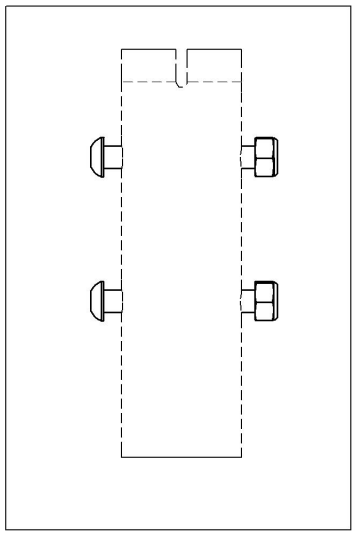

MAKE SURE TO HAVE YOUR SERIAL NUMBER NEARBY WHEN ORDERING PARTS FOR YOUR MOTION COMPOSITES WHEELCHAIR

Backrests Catalogue
Back Cane Hardware (Depth Adj. Back Cane)

ITEM NO.	PARTNO	DESCRIPTION	QTY.
1	9007626	Hardware - For Depth Adjustable Back Cane, With Tie Down	1
2	9007627	Hardware - For Depth Adjustable Back Cane, Without Tie Down	1
3	9001626	Tie Down - Rear, Wheelchair Transit, Angled	1

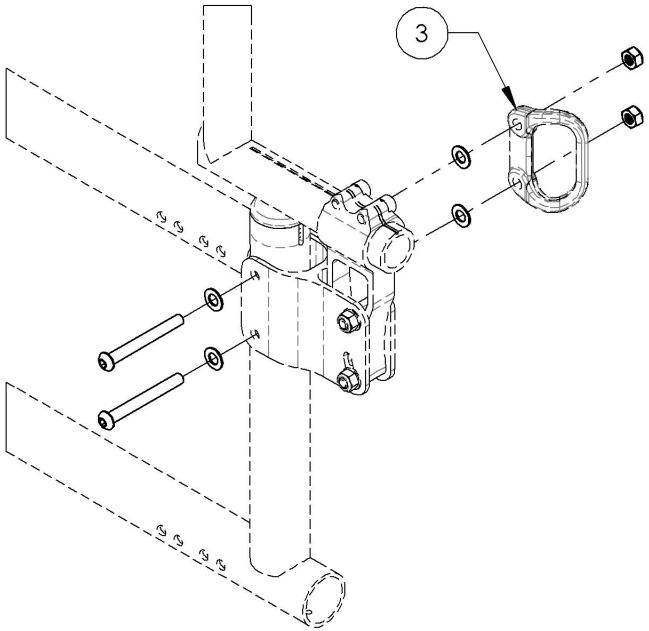

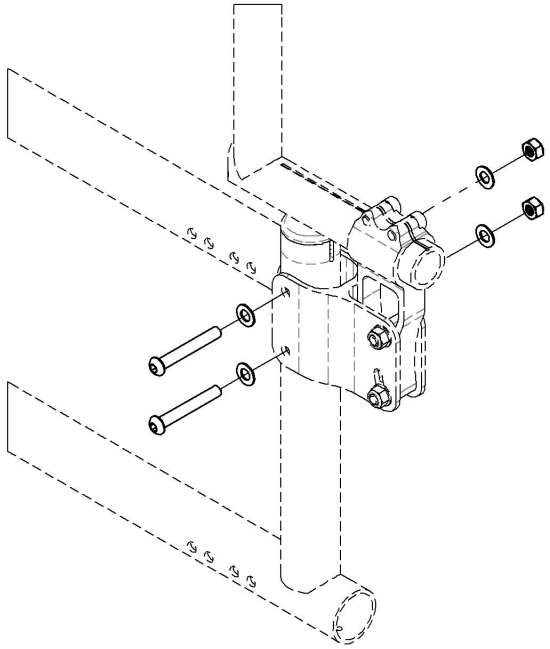

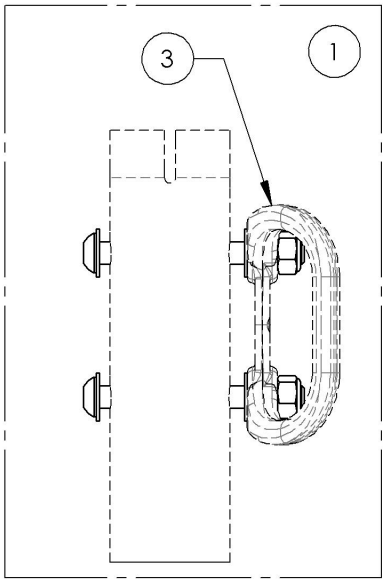

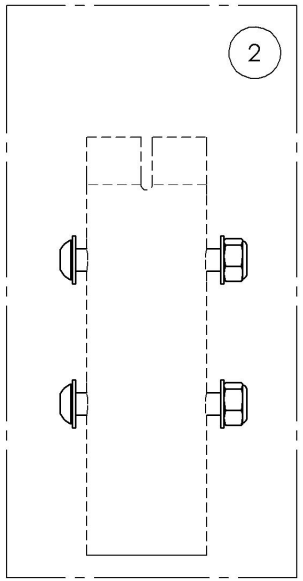

MAKE SURE TO HAVE YOUR SERIAL NUMBER NEARBY WHEN ORDERING PARTS FOR YOUR MOTION COMPOSITES WHEELCHAIR

9007626
Hardware - For Depth Adjustable Back Cane, With Tie Down

ITEM NO.	PARTNO	DESCRIPTION	9007626 /QTY.
1	90669	BUTTON HEAD CAP SCREW M6X1 X 55mm LONG, 24mm THREADED + BLUE THREADLOCKER - BLACK ZINC	2
2	99560	WASHER 1/4 17/64 ID X 1/2 OD X .032 THK	4
3	99512	M6 LOW NYLON LOCK	2

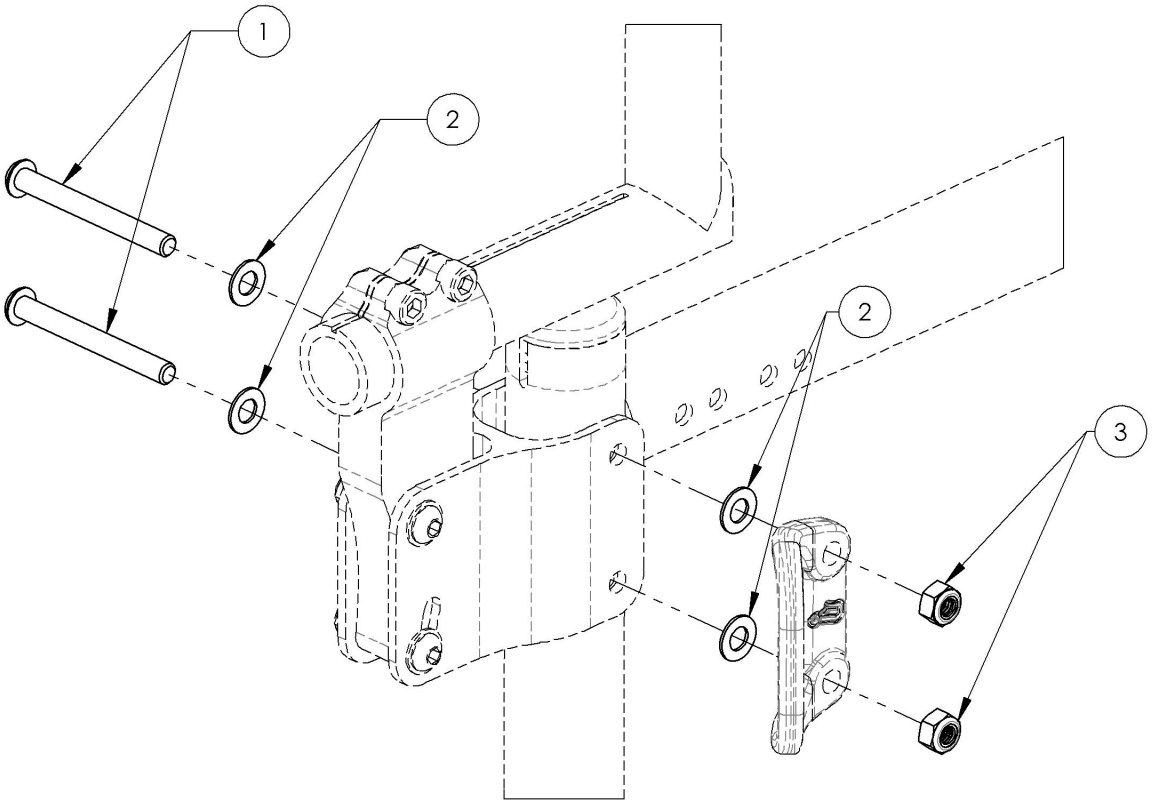

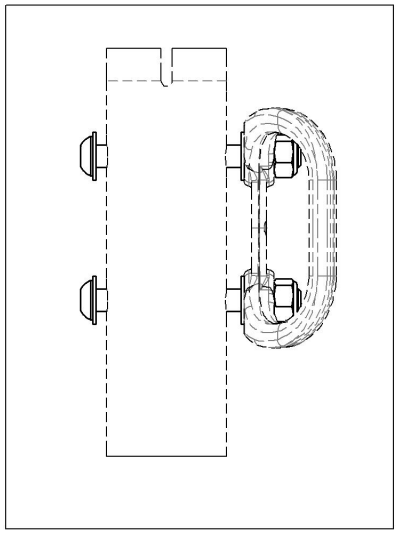

MAKE SURE TO HAVE YOUR SERIAL NUMBER NEARBY WHEN ORDERING PARTS FOR YOUR MOTION COMPOSITES WHEELCHAIR

9007627
Hardware - For Depth Adjustable Back Cane, Without Tie Down

ITEM NO.	PARTNO	DESCRIPTION	9007627 /QTY.
1	90667	BUTTON HEAD CAP SCREW M6X1 X 45mm LONG, 24mm THREADED + BLUE THREADLOCKER - BLACK ZINC	2
2	99560	WASHER 1/4 17/64 ID X 1/2 OD X .032 THK	4
3	99512	M6 LOW NYLON LOCK	2

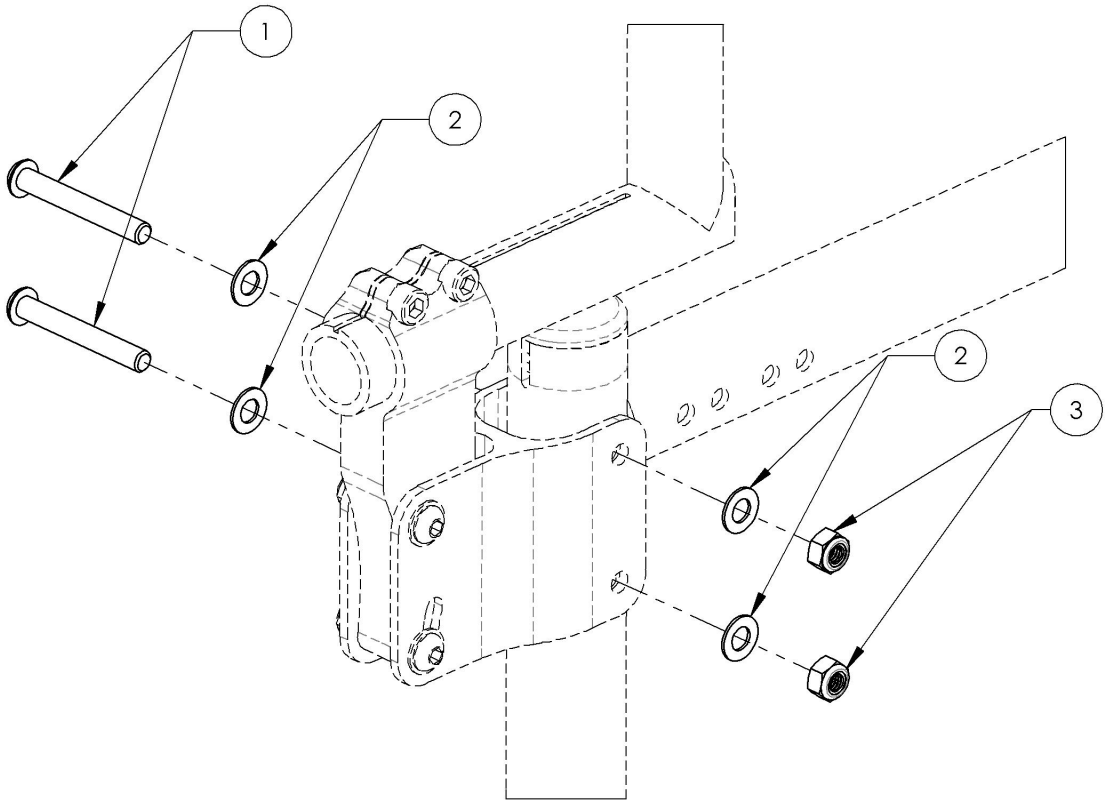

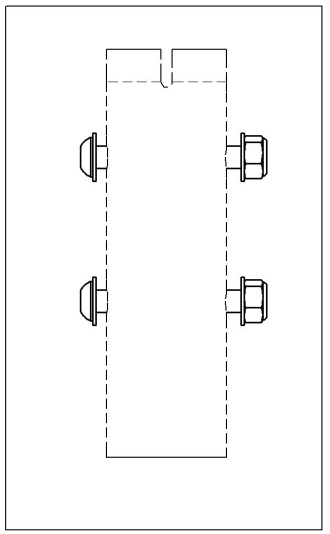

MAKE SURE TO HAVE YOUR SERIAL NUMBER NEARBY WHEN ORDERING PARTS FOR YOUR MOTION COMPOSITES WHEELCHAIR

USE SLEEVE **#9001003** IF THE NEWTON STABILIZER BAR (**#9001594 TO #9001604**) WILL BE INSTALLED WITH ALUMINUM STRAIGHT BACK CANES WITH INTEGRATED PUSH HANDLE (**#9003298 OR #9003299**)

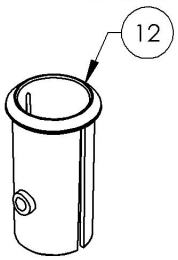

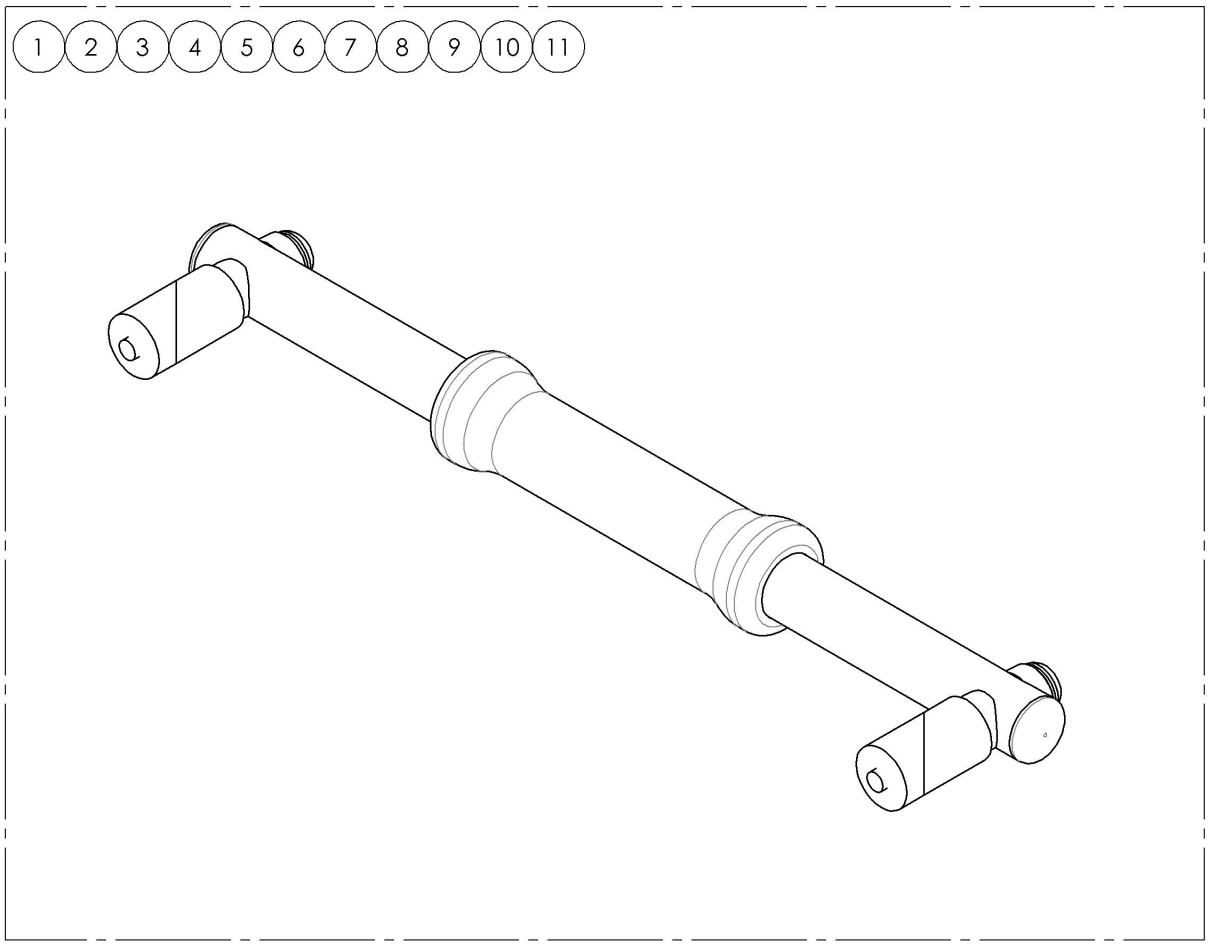

ITEM NO.	PARTNO	DESCRIPTION	QTY.
1	9001594	Newton Stabilizer Bar - Folding, 12 in	1
2	9001595	Newton Stabilizer Bar - Folding, 13 in	1
3	9001596	Newton Stabilizer Bar - Folding, 14 in	1
4	9001597	Newton Stabilizer Bar - Folding, 15 in	1
5	9001598	Newton Stabilizer Bar - Folding, 16 in	1
6	9001599	Newton Stabilizer Bar - Folding, 17 in	1
7	9001600	Newton Stabilizer Bar - Folding, 18 in	1
8	9001601	Newton Stabilizer Bar - Folding, 19 in	1
9	9001602	Newton Stabilizer Bar - Folding, 20 in	1
10	9001603	Newton Stabilizer Bar - Folding, 21 in	1
11	9001604	Newton Stabilizer Bar - Folding, 22 in	1
12	9001003	Back Cane - Sleeve for Integrated Push Handle	1

9001594_9001604
Newton Stabilizer Bar - Folding

ITEM NO.	PARTNO	DESCRIPTION	9001594 /QTY.	9001595 /QTY.	9001596 /QTY.	9001597 /QTY.	9001598 /QTY.	9001599 /QTY.	9001600 /QTY.	9001601 /QTY.	9001602 /QTY.	9001603 /QTY.	9001604 /QTY.
1	60704	NEWTON FOLDING STABILIZER BAR 12 in - ASSEMBLY	1	-	-	-	-	-	-	-	-	-	-
2	60705	NEWTON FOLDING STABILIZER BAR 13 in - ASSEMBLY	-	1	-	-	-	-	-	-	-	-	-
3	60706	NEWTON FOLDING STABILIZER BAR 14 in- ASSEMBLY	-	-	1	-	-	-	-	-	-	-	-
4	60707	NEWTON FOLDING STABILIZER BAR 15 in - ASSEMBLY	-	-	-	1	-	-	-	-	-	-	-
5	60708	NEWTON FOLDING STABILIZER BAR 16 in - ASSEMBLY	-	-	-	-	1	-	-	-	-	-	-
6	60709	NEWTON FOLDING STABILIZER BAR 17 in - ASSEMBLY	-	-	-	-	-	1	-	-	-	-	-
7	60710	NEWTON FOLDING STABILIZER BAR 18 in - ASSEMBLY	-	-	-	-	-	-	1	-	-	-	-
8	60711	NEWTON FOLDING STABILIZER BAR 19 in - ASSEMBLY	-	-	-	-	-	-	-	1	-	-	-
9	60712	NEWTON FOLDING STABILIZER BAR 20 in - ASSEMBLY	-	-	-	-	-	-	-	-	1	-	-
10	60713	NEWTON FOLDING STABILIZER BAR 21 in - ASSEMBLY	-	-	-	-	-	-	-	-	-	1	-
11	60714	NEWTON FOLDING STABILIZER BAR 22 in - ASSEMBLY	-	-	-	-	-	-	-	-	-	-	1

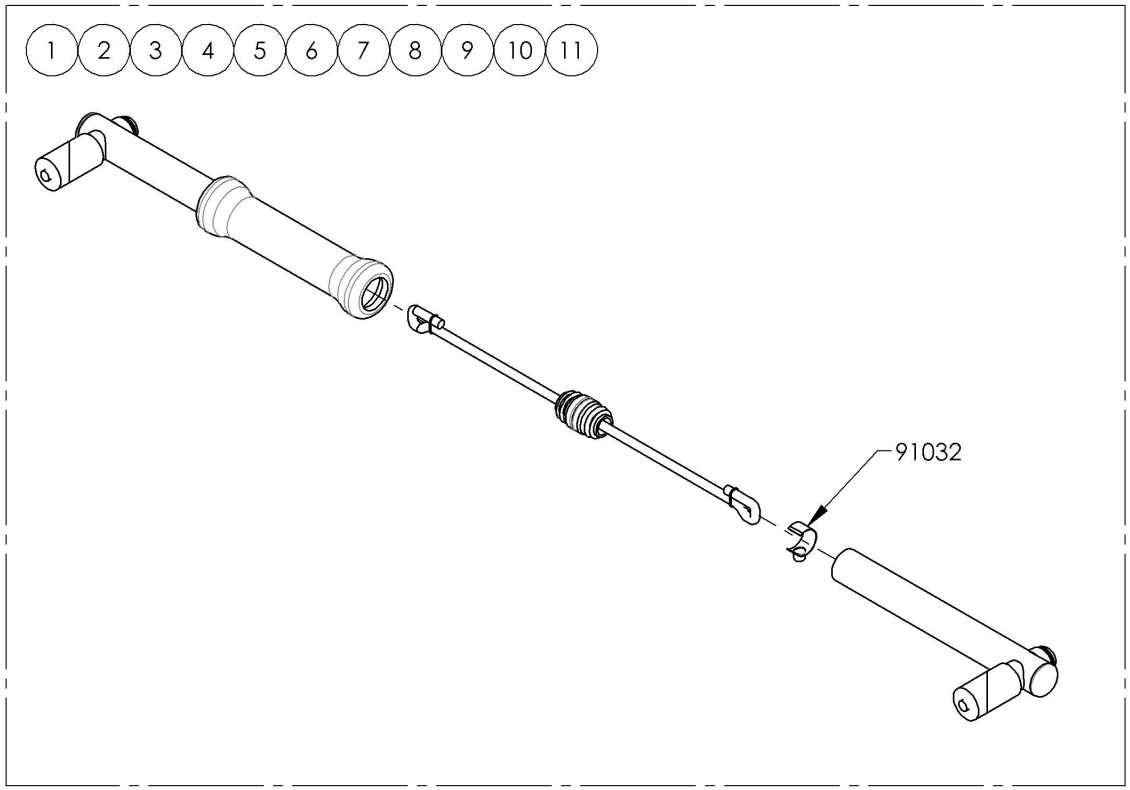

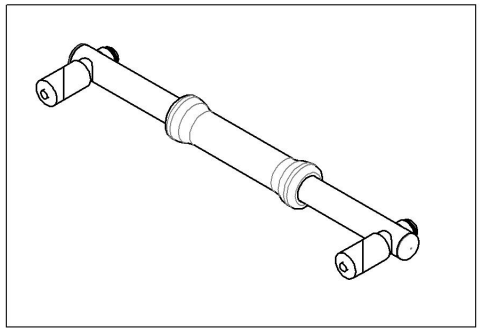

MAKE SURE TO HAVE YOUR SERIAL NUMBER NEARBY WHEN ORDERING PARTS FOR YOUR MOTION COMPOSITES WHEELCHAIR

ITEM NO.	PARTNO	DESCRIPTION	QTY.
1	9001605	Stroller Handle - 12 in	1
2	9001606	Stroller Handle - 13 in	1
3	9001607	Stroller Handle - 14 in	1
4	9001608	Stroller Handle - 15 in	1
5	9001609	Stroller Handle - 16 in	1
6	9001610	Stroller Handle - 17 in	1
7	9001611	Stroller Handle - 18 in	1
8	9001612	Stroller Handle - 19 in	1
9	9001613	Stroller Handle - 20 in	1
10	9002915	HD Push Handle - Adjustable	2
11	9001003	Back Cane - Sleeve for Integrated Push Handle	1

Important WARNING when using the Stroller Handle

The Stroller Handle is not designed to lift or pull the weight of user in the wheelchair. It's designed to push and guide the wheelchair user.

Lifting or pulling the weight of the user in the wheelchair could initiate the breakage of the push handles and cause serious injury. **(PLEASE REFER TO USER MANUAL)**

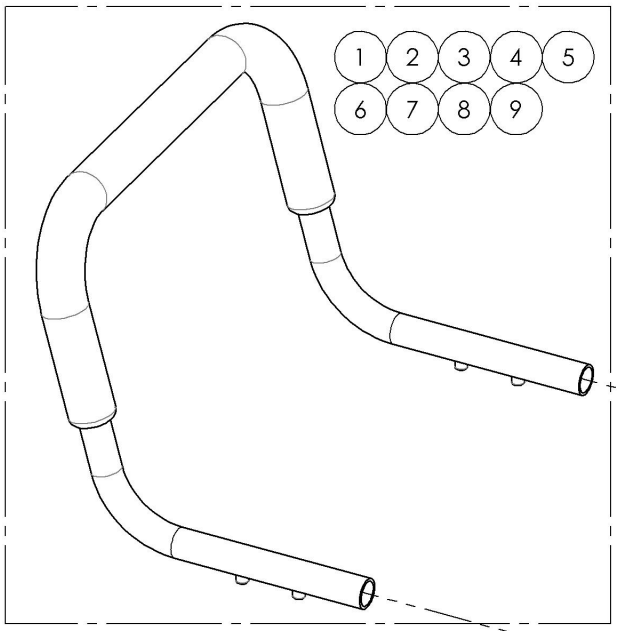

USE SLEEVE **#9001003** IF THE STROLLER HANDLE (**#9001605 TO #9001613**) WILL BE INSTALLED WITH ALUMINUM STRAIGHT BACK CANES WITH INTEGRATED PUSH HANDLE (**#9003298 OR #9003299**)

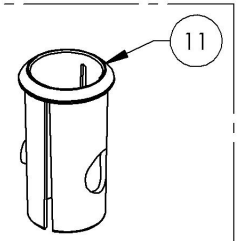

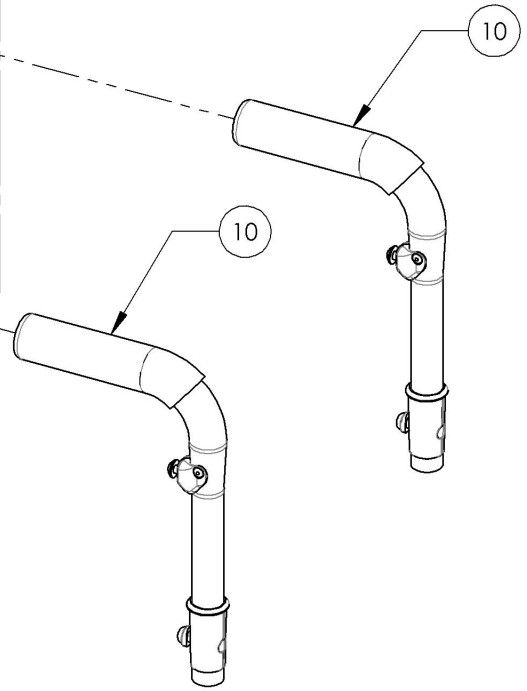

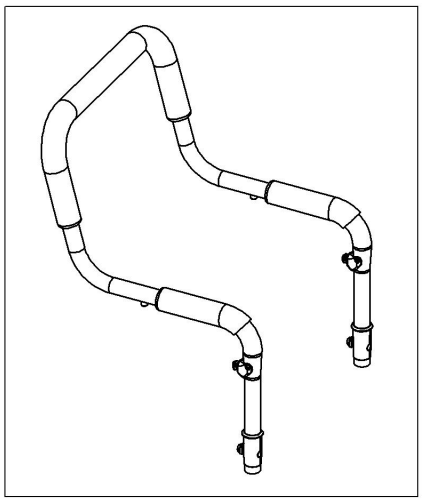

MAKE SURE TO HAVE YOUR SERIAL NUMBER NEARBY WHEN ORDERING PARTS FOR YOUR MOTION COMPOSITES WHEELCHAIR

9001605_9001613
Stroller Handles

ITEM NO.	PARTNO	DESCRIPTION	9001605 /QTY.	9001606 /QTY.	9001607 /QTY.	9001608 /QTY.	9001609 /QTY.	9001610 /QTY.	9001611 /QTY.	9001612 /QTY.	9001613 /QTY.
1	51525	12in STROLLER HANDLE - ASSEMBLY	1	-	-	-	-	-	-	-	-
2	51526	13in STROLLER HANDLE - ASSEMBLY	-	1	-	-	-	-	-	-	-
3	51527	14in STROLLER HANDLE - ASSEMBLY	-	-	1	-	-	-	-	-	-
4	51528	15in STROLLER HANDLE - ASSEMBLY	-	-	-	1	-	-	-	-	-
5	51529	16in STROLLER HANDLE - ASSEMBLY	-	-	-	-	1	-	-	-	-
6	51530	17in STROLLER HANDLE - ASSEMBLY	-	-	-	-	-	1	-	-	-
7	51531	18in STROLLER HANDLE - ASSEMBLY	-	-	-	-	-	-	1	-	-
8	51532	19in STROLLER HANDLE - ASSEMBLY	-	-	-	-	-	-	-	1	-
9	51533	20in STROLLER HANDLE - ASSEMBLY	-	-	-	-	-	-	-	-	1

Important WARNING when using the Stroller Handle

The Stroller Handle is not designed to lift or pull the weight of user in the wheelchair. It's designed to push and guide the wheelchair user.

Lifting or pulling the weight of the user in the wheelchair could initiate the breakage of the push handles and cause serious injury.
(PLEASE REFER TO USER MANUAL)

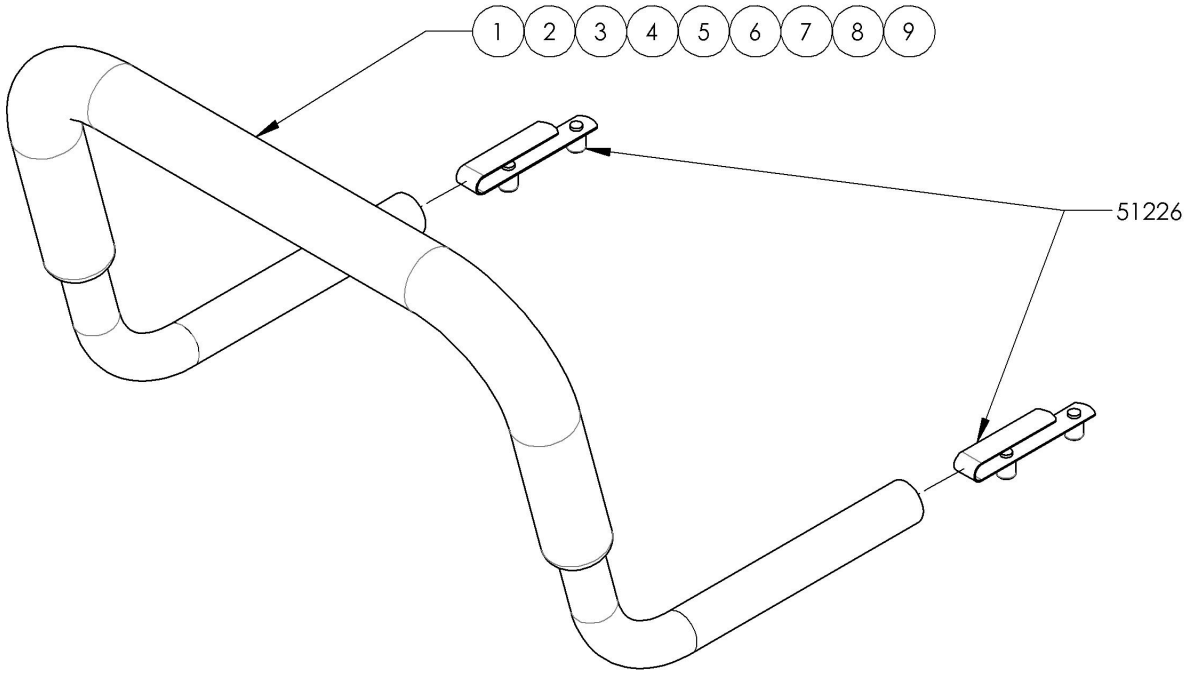

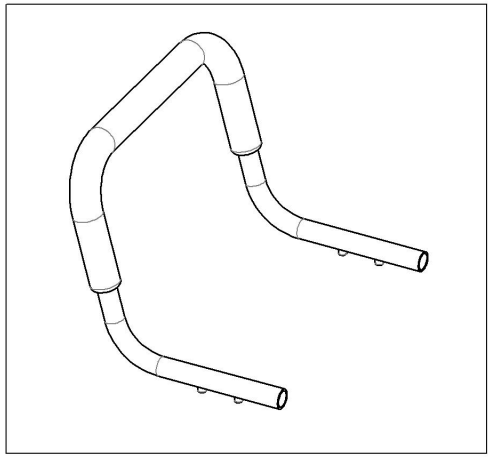

MAKE SURE TO HAVE YOUR SERIAL NUMBER NEARBY WHEN ORDERING PARTS FOR YOUR MOTION COMPOSITES WHEELCHAIR

ITEM NO.	PARTNO	DESCRIPTION	QTY.
1	9001592	Stabilizer Bar - Non-Folding, With Anchor Plate & Swivel Mount Kit	1
2	9001593	Stabilizer Bar - Non-Folding, With Anchor Plate Kit	1
3	9001589	Head Rest Pad - Small	1
4	9001590	Head Rest Pad - Medium	1
5	9001591	Head Rest Pad - Large	1

***HD Push Handles or Integrated Push Handles are required to Install Stabilizer Bar (#9001592 & #9001593) Please refer to Push Handles for Head Rests Catalogue.**

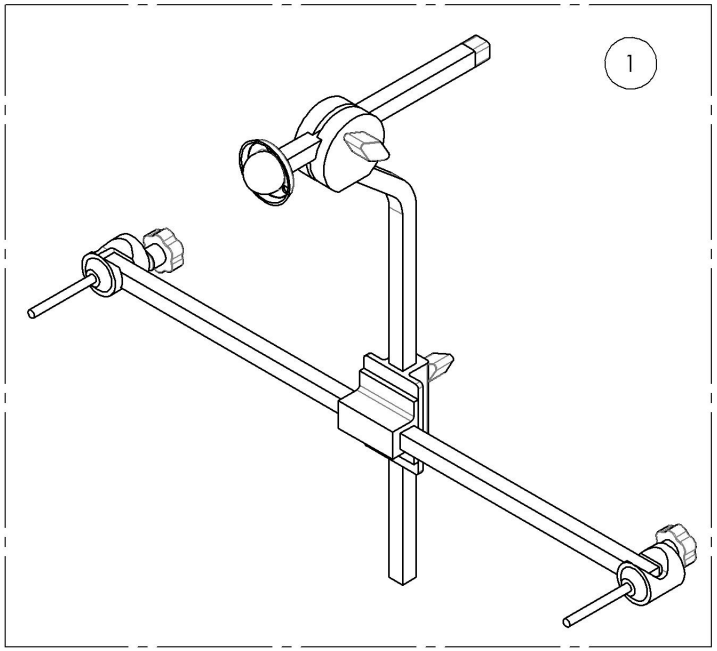

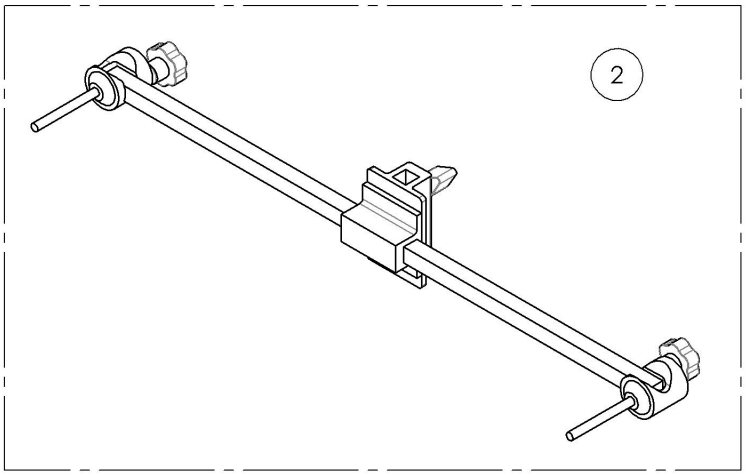

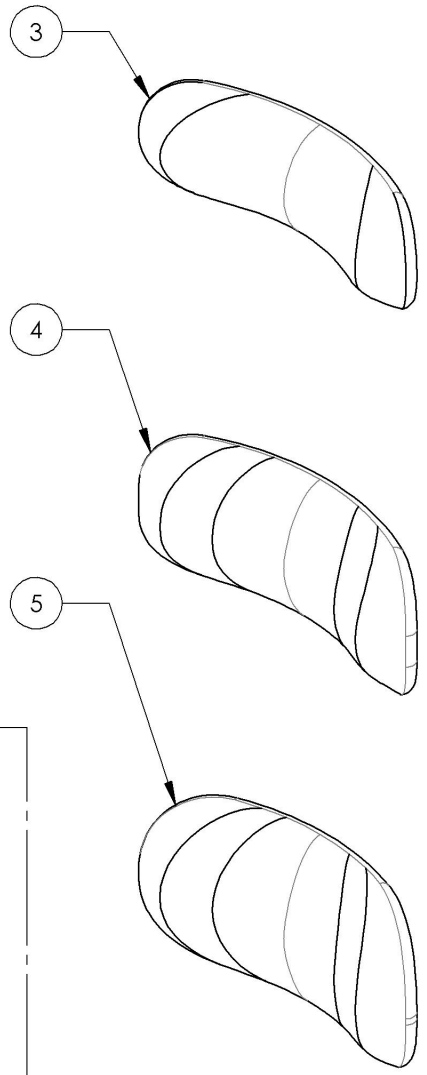

MAKE SURE TO HAVE YOUR SERIAL NUMBER NEARBY WHEN ORDERING PARTS FOR YOUR MOTION COMPOSITES WHEELCHAIR

9001592
Stabilizer Bar - Non-Folding, With Anchor Plate & Swivel Mount Kit

ITEM NO.	PARTNO	DESCRIPTION	9001592 /QTY.	REPLACEMENT PARTS/QTY.
1	60701	SWIVEL MOUNT/ANCHOR/STABILIZER BAR KIT	1	-
2	60108	SWIVEL MOUNT	-	1
3	60703	STABILIZER BAR	-	1

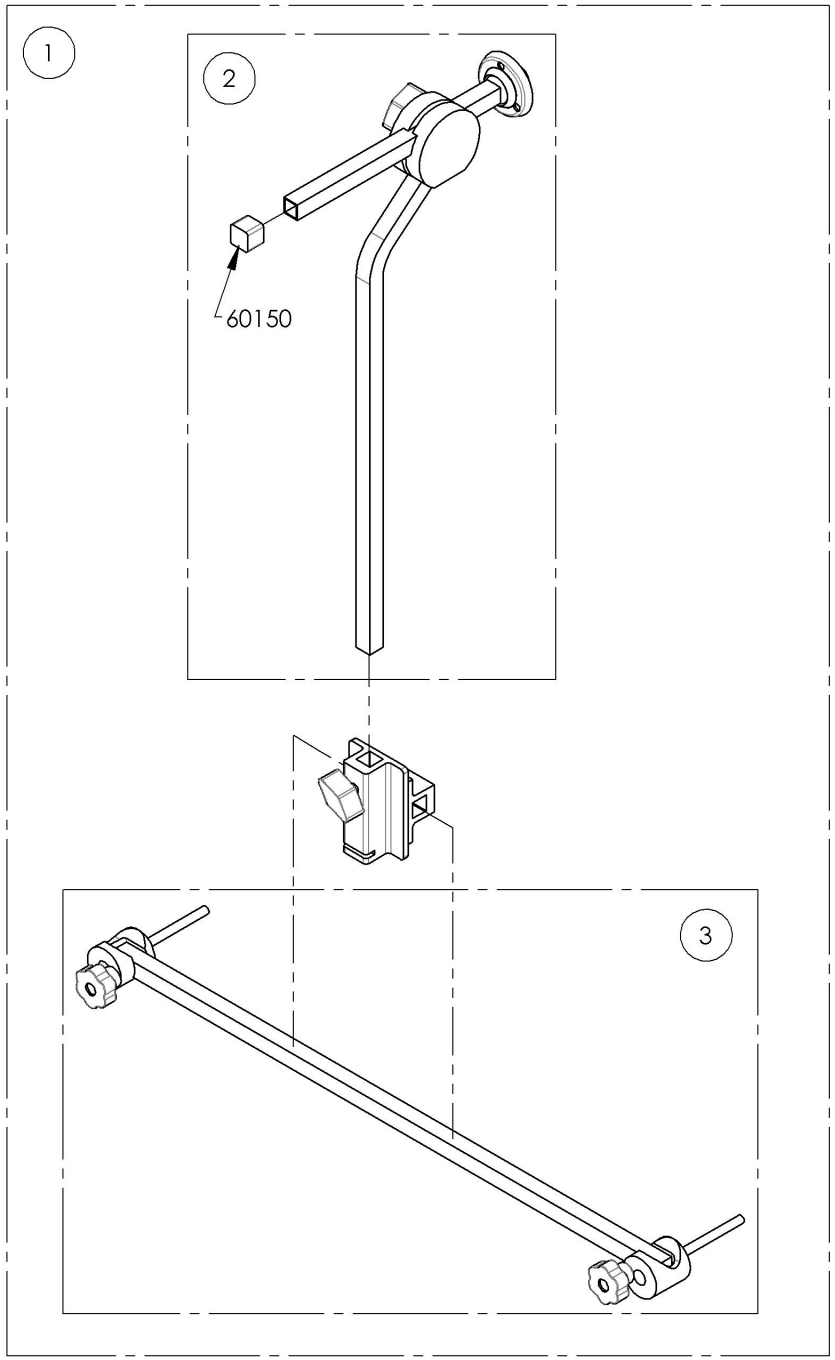

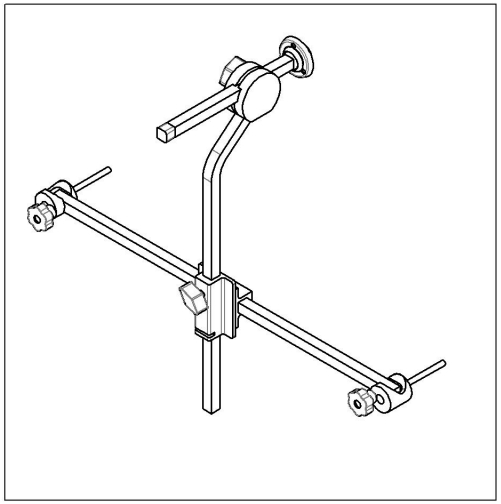

MAKE SURE TO HAVE YOUR SERIAL NUMBER NEARBY WHEN ORDERING PARTS FOR YOUR MOTION COMPOSITES WHEELCHAIR

9001593
Stabilizer Bar - Non-Folding, With Anchor Plate Kit

ITEM NO.	PARTNO	DESCRIPTION	9001593 /QTY.	REPLACEMENT PARTS/QTY.
1	60702	STABILIZER BAR + ANCHOR PLATE KIT	1	-
2	60703	STABILIZER BAR	-	1

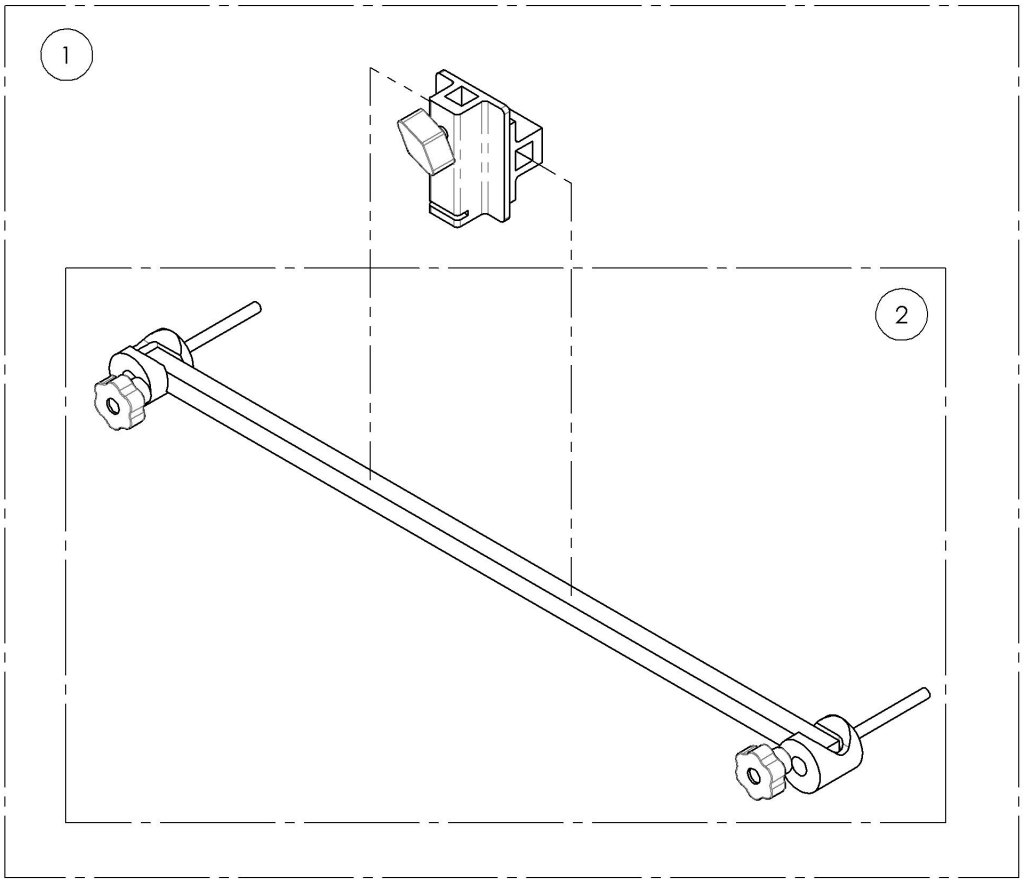

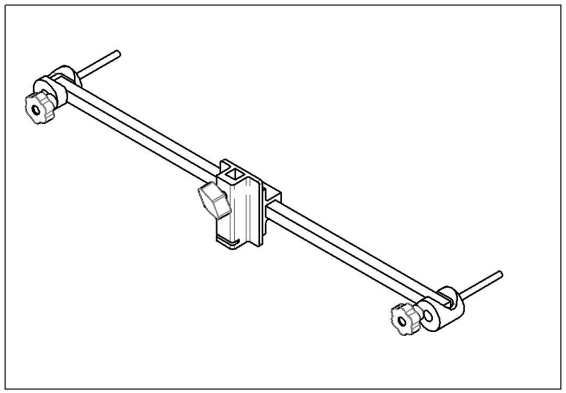

MAKE SURE TO HAVE YOUR SERIAL NUMBER NEARBY WHEN ORDERING PARTS FOR YOUR MOTION COMPOSITES WHEELCHAIR

Backrest Catalogue
Push Handles for Head Rests

ITEM NO.	PARTNO	DESCRIPTION	QTY
1	9007565	HD Push Handle - Adjustable with Tube Connector	1
2	9007610*	Back Cane - Alu, Straight + Fixed Push Handle, 9-15 in with Tube Connect	1
3	9007611*	Back Cane - Alu, Straight + Fixed Push Handle, 15-21 in with Tube Connect	1
4	9007612*	Back Cane - Alu, 8° bend + Fixed Push Handle, 16, 18 or 20 in with Tube Connect	1
5	9007613	Back Cane - Alu, Angle Adj, 8° bend + Fixed Push Handle, 16 in with Tube Connect	1
6	9007614	Back Cane - Alu, Angle Adj, 8° bend + Fixed Push Handle, 20 in with Tube Connect	1

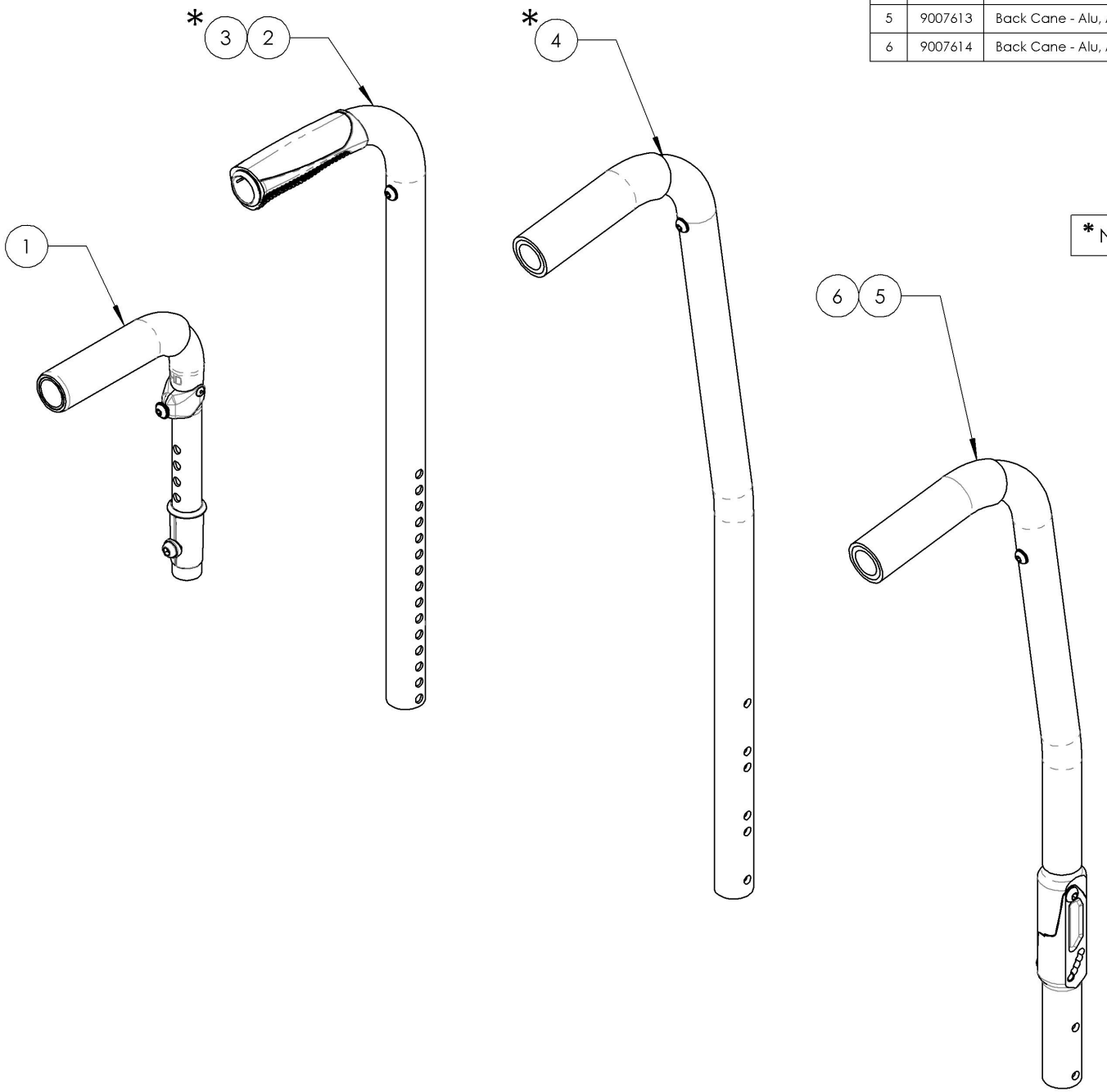

* NOT AVAILABLE ON VELOCE WHEELCHAIRS

MAKE SURE TO HAVE YOUR SERIAL NUMBER NEARBY WHEN ORDERING PARTS FOR YOUR MOTION COMPOSITES WHEELCHAIR

9007565
HD Push Handle - Adjustable with Tube Connector

ITEM NO.	PARTNO	DESCRIPTION	9007565 /QTY.	REPLACEMENT PARTS/QTY.
1	32541	HD PUSH HANDLE + TUBE CONNECT 7/8 - ASSY	1	-
2	32017	PUSH HANDLE BACK SLEEVE	1	-
3	32514	DOWEL NUT PUSH HANDLE - ASSEMBLY (M)	-	1

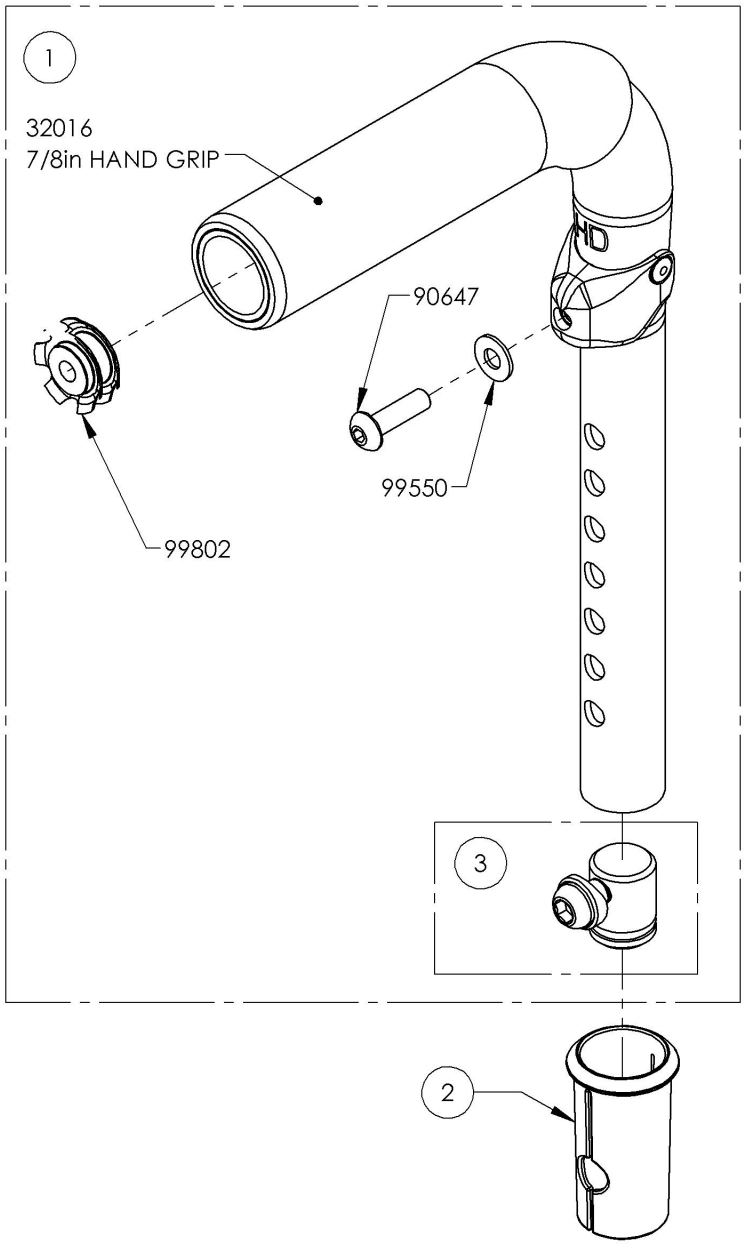

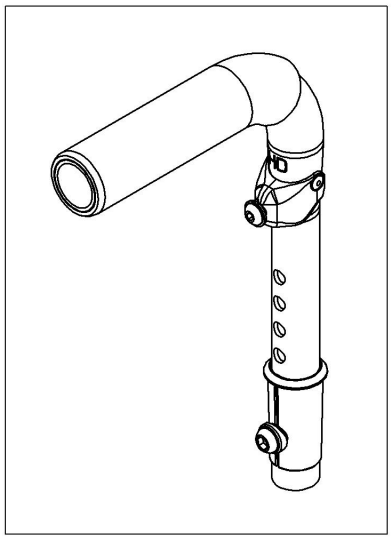

MAKE SURE TO HAVE YOUR SERIAL NUMBER NEARBY WHEN ORDERING PARTS FOR YOUR MOTION COMPOSITES WHEELCHAIR

9007610_9007611
Back Cane - Alu, Straight + Fixed Push Handle, with Tube Connect

ITEM NO.	PARTNO	DESCRIPTION	9007610 /QTY.	9007611 /QTY.
1	32546	ALU STRAIGHT BACK CANE 9-15in IPH + TUBE CONNECT - ASSY	1	-
2	32547	ALU STRAIGHT BACK CANE 15-21in IPH + TUBE CONNECT - ASSY	-	1
3	90647	BUTTON HEAD CAP SCREW M5X0.8 X 18mm LONG, FULLY THREADED + BLUE THREADLOCKER - BLACK ZINC	1	1

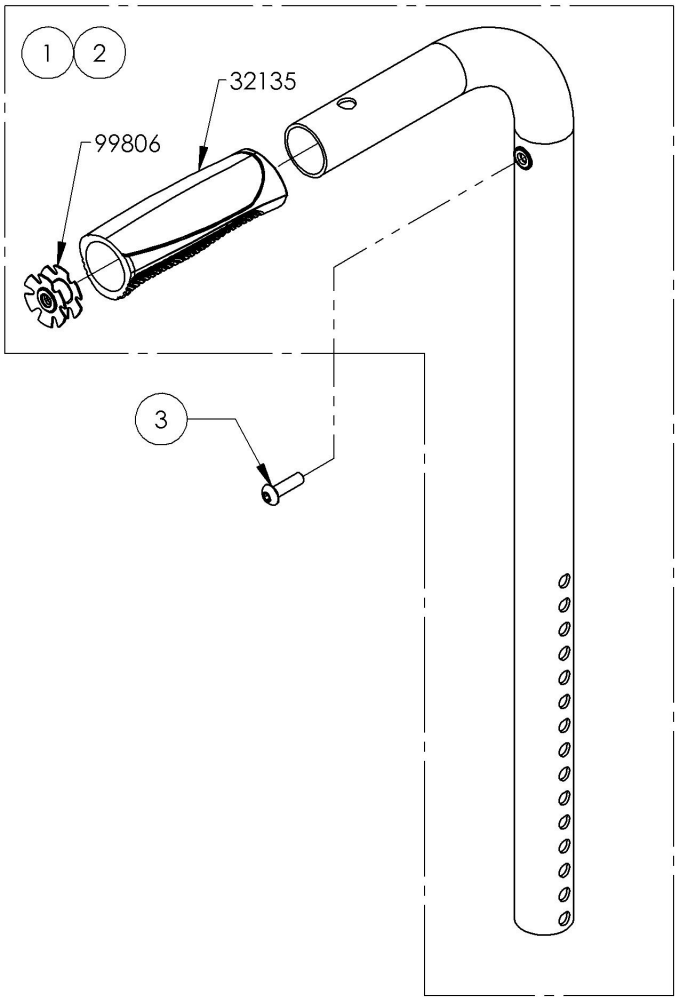

9007610
Back Cane - Alu, Straight + Fixed Push Handle, 9-15 in with Tube Connect

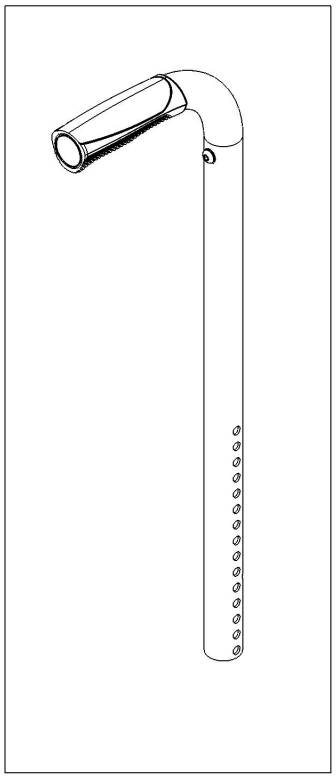

9007611
Back Cane - Alu, Straight + Fixed Push Handle, 15-21 in with Tube Connect

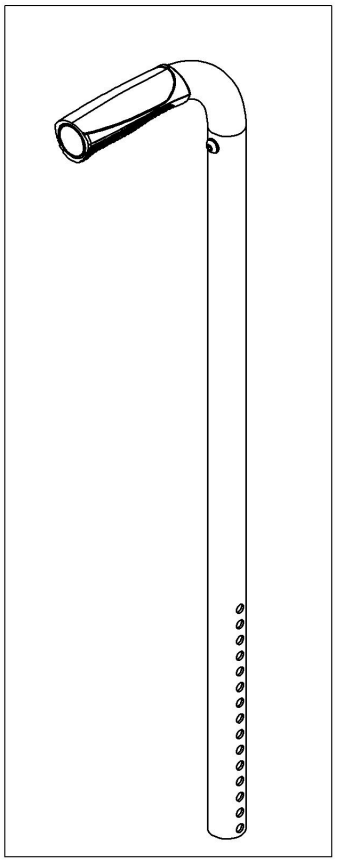

MAKE SURE TO HAVE YOUR SERIAL NUMBER NEARBY WHEN ORDERING PARTS FOR YOUR MOTION COMPOSITES WHEELCHAIR

9007612
Back Cane - Alu, 8˚ bend + Fixed Push Handle, 16, 18 or 20 in with Tube Connect

ITEM NO.	PARTNO	DESCRIPTION	9007612 /QTY.
1	32500	ALU 8 DEG BACK CANE 16, 18 OR 20 in WITH FIXED PUSH HANDLE - ASSEMBLY (M)	1
2	90647	BUTTON HEAD CAP SCREW M5X0.8 X 18mm LONG, FULLY THREADED + BLUE THREADLOCKER - BLACK ZINC	1
3	99802	TUBE CONNECT 1_4-20 FOR 0.75 - 0.775in ID	1

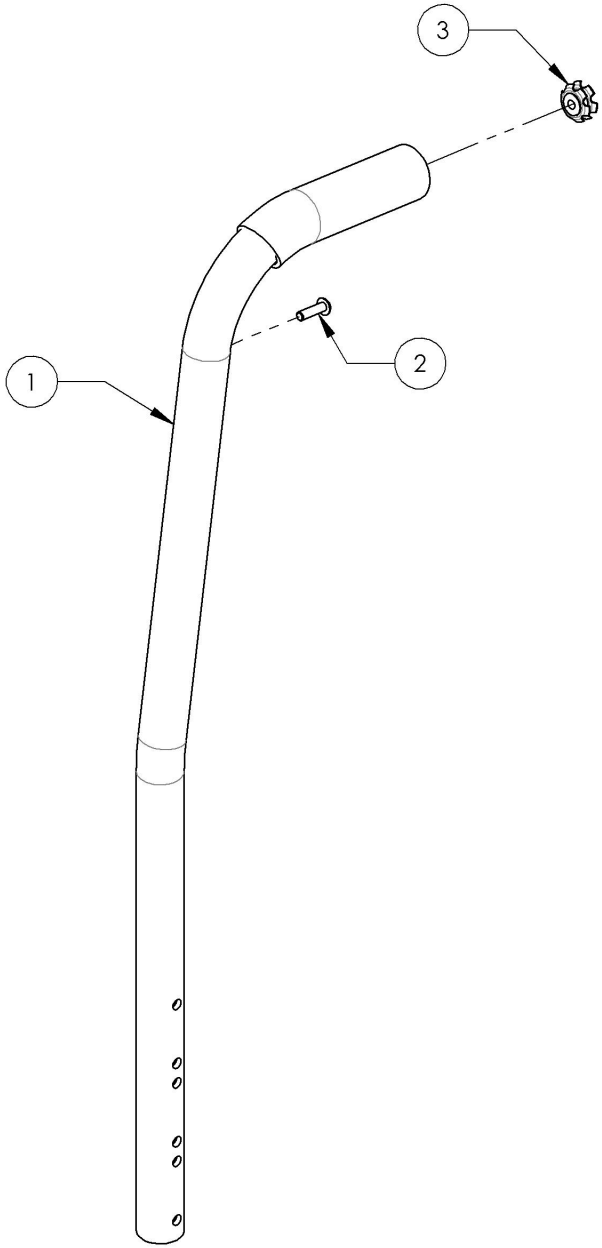

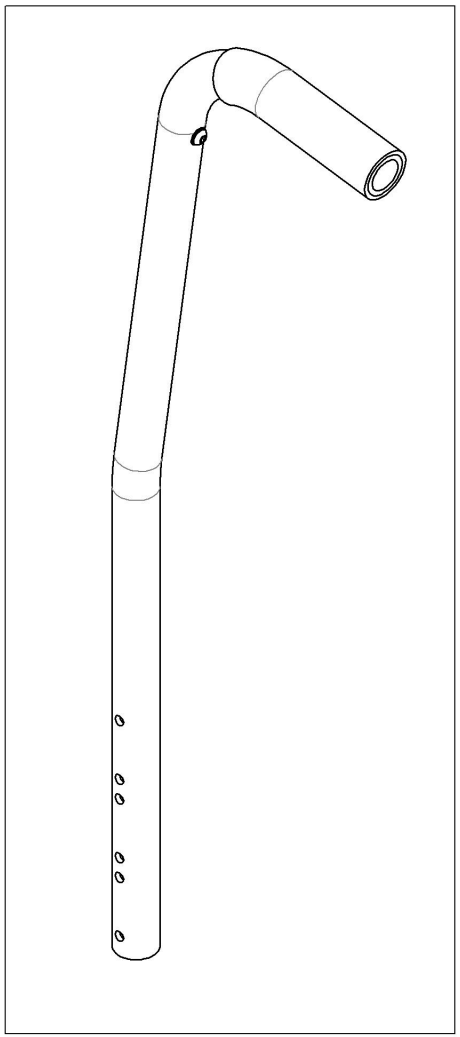

MAKE SURE TO HAVE YOUR SERIAL NUMBER NEARBY WHEN ORDERING PARTS FOR YOUR MOTION COMPOSITES WHEELCHAIR

9007613_9007614
Back Cane - Alu, Angle Adj, 8˚ bend + Fixed Push Handle, with Tube Connect

ITEM NO.	PARTNO	DESCRIPTION	9007613 /QTY.	9007614 /QTY.
1	32501	ALUMINIUM ADJUSTABLE ANGLE BACK 16" W_ FIXED PUSH HANDLE - ASSEMBLY (M)	1	-
2	32502	ALUMINIUM ADJUSTABLE ANGLE BACK 20" W_ FIXED PUSH HANDLE - ASSEMBLY (M)	-	1
3	32037	LOWER ADJUSTABLE BACKREST (M)	1	1
4	90663	BUTTON HEAD CAP SCREW M6X1 X 25mm LONG, FULLY THREADED	2	2
5	90647	BUTTON HEAD CAP SCREW M5X0.8 X 18mm LONG, FULLY THREADED + BLUE THREADLOCKER - BLACK ZINC	1	1
6	99802	TUBE CONNECT 1_4-20 FOR 0.75 - 0.775in ID	1	1

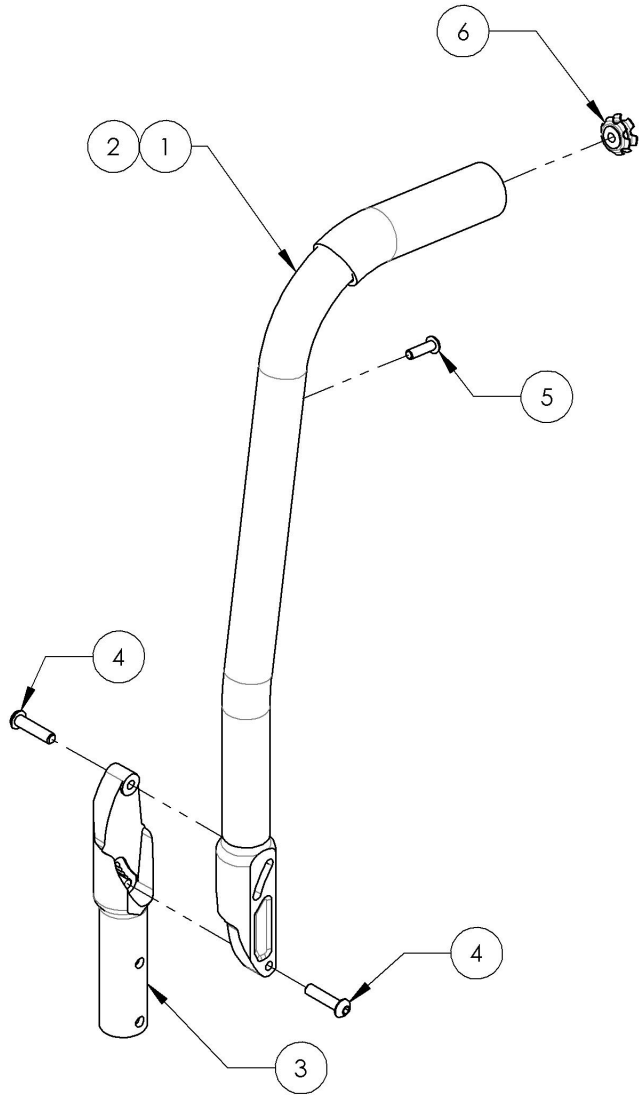

9007613
Back Cane - Alu, Angle Adj,
8° bend + Fixed Push Handle,
16 in with Tube Connect

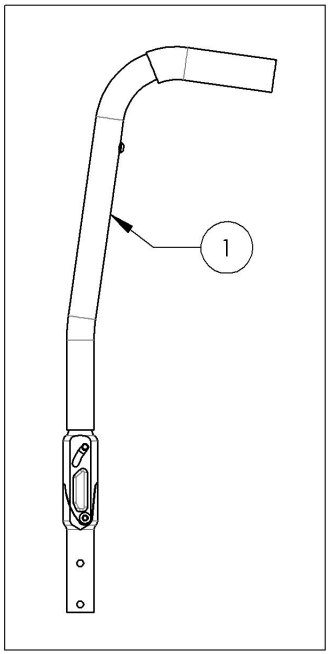

9007614
Back Cane - Alu, Angle Adj,
8° bend + Fixed Push Handle,
20 in with Tube Connect

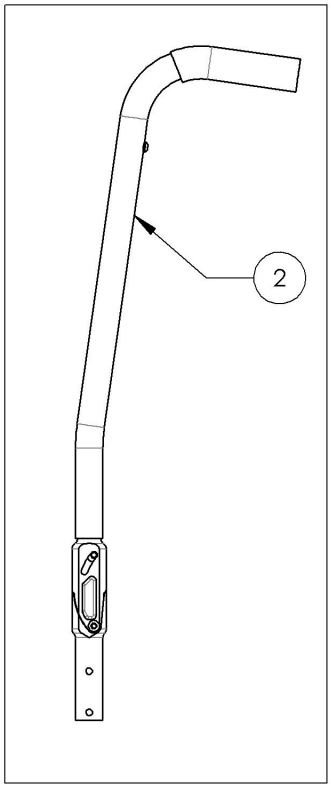

MAKE SURE TO HAVE YOUR SERIAL NUMBER NEARBY WHEN ORDERING PARTS FOR YOUR MOTION COMPOSITES WHEELCHAIR

SLIP ON BACK UPHOLSTERY ACTIVE-MESH
REFER TO ITEM
9008000_9008054
FOR LENGTH & WIDTH

ADJUSTABLE TENSION BACK UPHOLSTERY
ACTIVE-MESH
REFER TO ITEM
9008055_9008109
FOR LENGTH & WIDTH

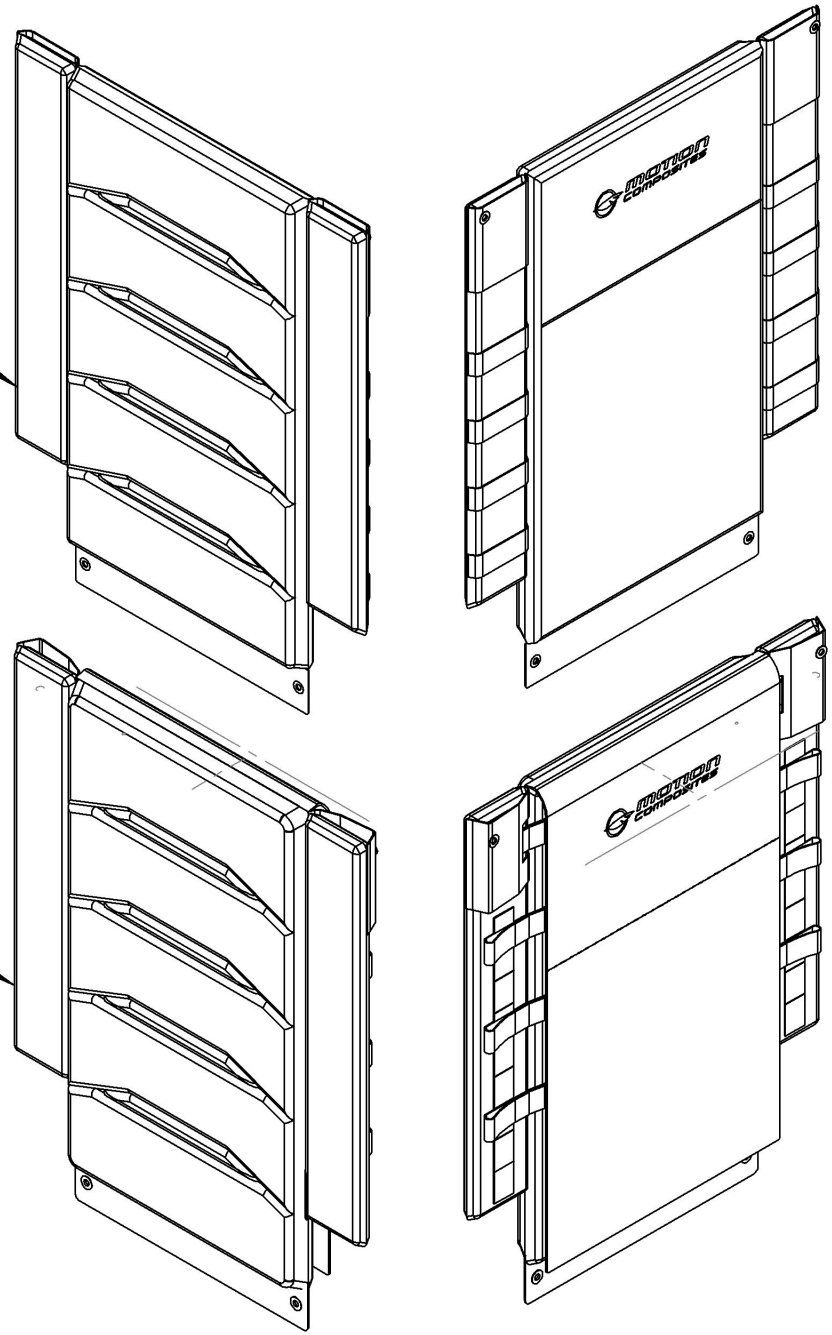

MAKE SURE TO HAVE YOUR SERIAL NUMBER
NEARBY WHEN ORDERING PARTS FOR YOUR
MOTION COMPOSITES WHEELCHAIR

9008000_9008054
Back Upholstery - Slip On, Active-Mesh

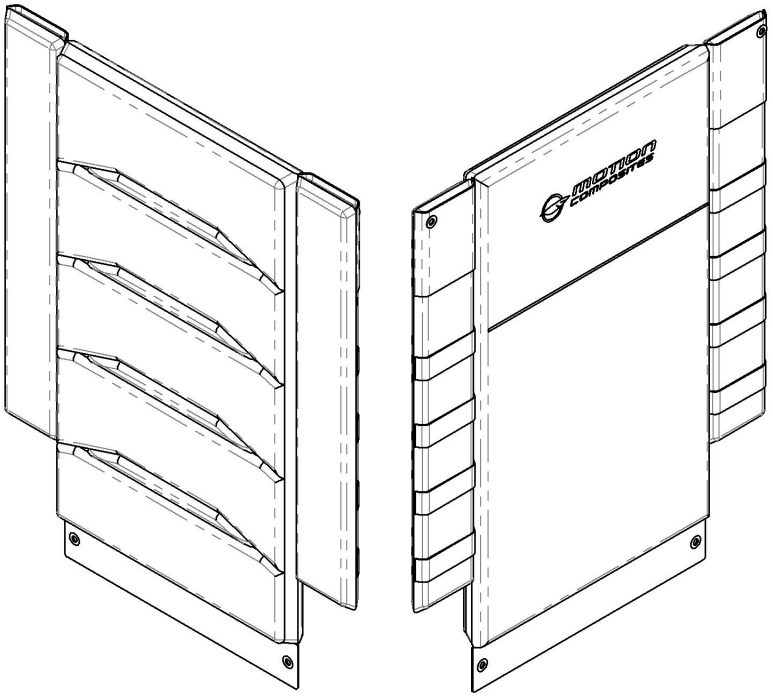

SLIP ON ACTIVE-MESH BACK UPHOLSTERY		LENGTH in inches (cm)				
		9-12 (22.9-30.5)	12-15 (30.5-38.1)	15-18 (38.1-45.7)	18-21 (45.7-53.3)	21-24 (53.3-60.9)
WIDTH in inches (cm)	12 (30.5)	9008000	9008001	9008002	9008003	9008004
	13 (33.0)	9008005	9008006	9008007	9008008	9008009
	14 (35.6)	9008010	9008011	9008012	9008013	9008014
	15 (38.1)	9008015	9008016	9008017	9008018	9008019
	16 (40.6)	9008020	9008021	9008022	9008023	9008024
	17 (43.2)	9008025	9008026	9008027	9008028	9008029
	18 (45.7)	9008030	9008031	9008032	9008033	9008034
	19 (48.3)	9008035	9008036	9008037	9008038	9008039
	20 (50.8)	9008040	9008041	9008042	9008043	9008044
	21 (53.3)	9008045	9008046	9008047	9008048	9008049
	22 (55.9)	9008050	9008051	9008052	9008053	9008054

MAKE SURE TO HAVE YOUR SERIAL NUMBER NEARBY WHEN ORDERING PARTS FOR YOUR MOTION COMPOSITES WHEELCHAIR

9008055_9008109
Back Upholstery - Adjustable Tension, Active-Mesh

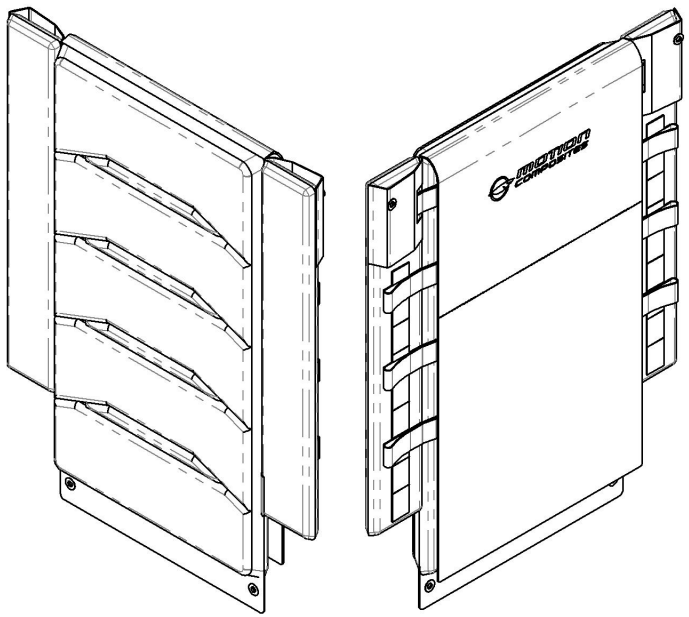

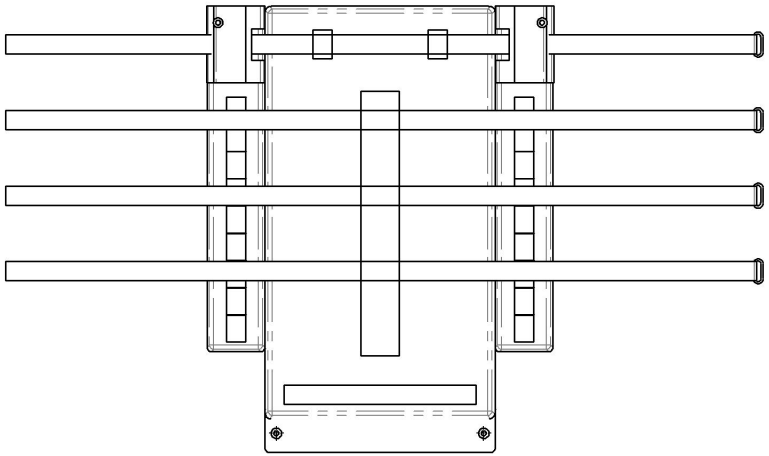

BACKREST STRAP REPLACEMENT

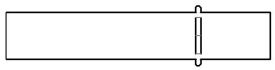

1in (25mm) Backrest Strap Width	
Part#	**Backrest Width in (cm)**
60207	14 (35.6)
60208	15 (38.1)
60209	16 (40.6)
60210	17 (43.2)
60211	18 (45.7)
60212	19 (48.3)
60213	20 (50.8)
60214	21 (53.3)
60215	22 (55.9)

ADJUSTABLE TENSION BACK UPHOLSTERY ACTIVE-MESH		**LENGTH** in inches (cm)				
		9-12 (22.9-30.5)	12-15 (30.5-38.1)	15-18 (38.1-45.7)	18-21 (45.7-53.3)	21-24 (53.3-60.9)
WIDTH in inches (cm)	12 (30.5)	9008055	9008056	9008057	9008058	9008059
	13 (33.0)	9008060	9008061	9008062	9008063	9008064
	14 (35.6)	9008065	9008066	9008067	9008068	9008069
	15 (38.1)	9008070	9008071	9008072	9008073	9008074
	16 (40.6)	9008075	9008076	9008077	9008078	9008079
	17 (43.2)	9008080	9008081	9008082	9008083	9008084
	18 (45.7)	9008085	9008086	9008087	9008088	9008089
	19 (48.3)	9008090	9008091	9008092	9008093	9008094
	20 (50.8)	9008095	9008096	9008097	9008098	9008099
	21 (53.3)	9008100	9008101	9008102	9008103	9008104
	22 (55.9)	9008105	9008106	9008107	9008108	9008109

MAKE SURE TO HAVE YOUR SERIAL NUMBER NEARBY WHEN ORDERING PARTS FOR YOUR MOTION COMPOSITES WHEELCHAIR

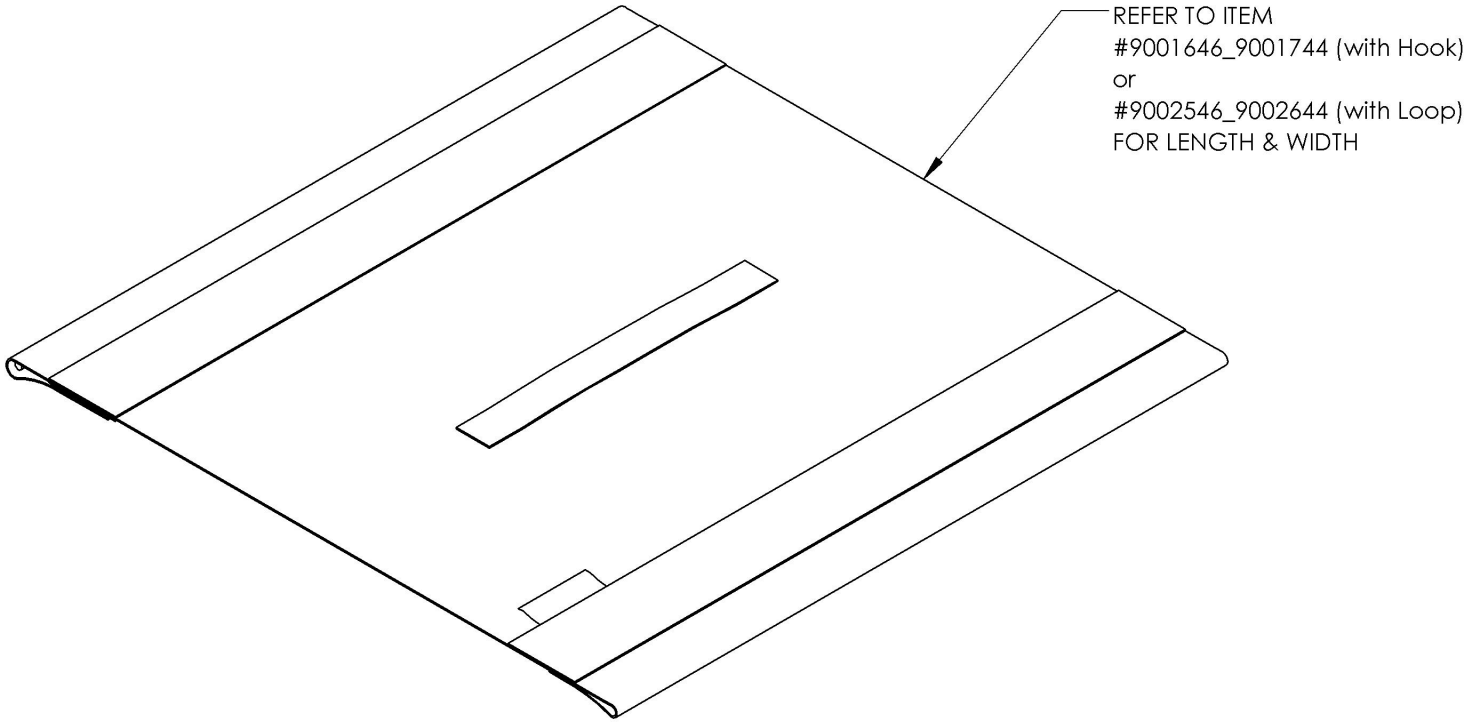
REFER TO ITEM
#9001646_9001744 (with Hook)
or
#9002546_9002644 (with Loop)
FOR LENGTH & WIDTH

9001646_9001744
Sliding Seat Slings Type 2 with Hook (Specify Size)

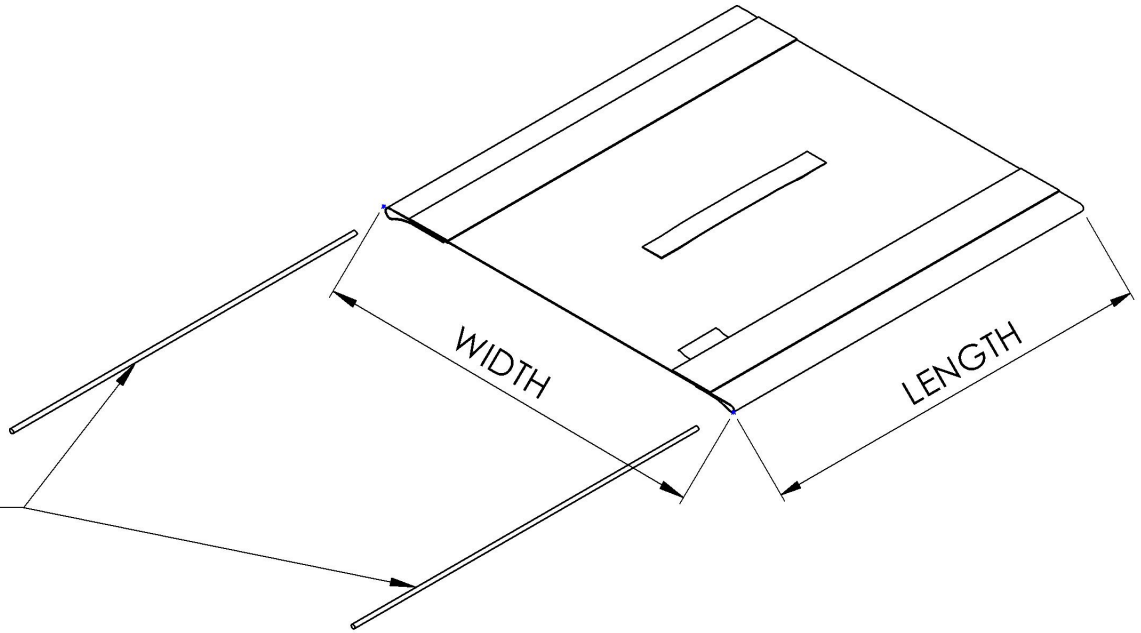

REPLACEMENT PARTS	
1x 12"Slotted Tube Guide	12173
1x 13"Slotted Tube Guide	12174
1x 14"Slotted Tube Guide	12175
1x 15"Slotted Tube Guide	12176
1x 16"Slotted Tube Guide	12177
1x 17"Slotted Tube Guide	12178
1x 18"Slotted Tube Guide	12179
1x 19"Slotted Tube Guide	12180
1x 20"Slotted Tube Guide	12181

(2X slotted tube guide included)		**LENGTH** in inches (cm)								
		12 (30.5)	13 (33.0)	14 (35.6)	15 (38.1)	16 (40.6)	17 (43.2)	18 (45.7)	19 (48.3)	20 (50.8)
WIDTH in inches (cm)	12 (30.5)	9001646	9001647	9001648	9001649	9001650	9001651	9001652	9001653	9001654
	13 (33.0)	9001655	9001656	9001657	9001658	9001659	9001660	9001661	9001662	9001663
	14 (35.6)	9001664	9001665	9001666	9001667	9001668	9001669	9001670	9001671	9001672
	15 (38.1)	9001673	9001674	9001675	9001676	9001677	9001678	9001679	9001680	9001681
	16 (40.6)	9001682	9001683	9001684	9001685	9001686	9001687	9001688	9001689	9001690
	17 (43.2)	9001691	9001692	9001693	9001694	9001695	9001696	9001697	9001698	9001699
	18 (45.7)	9001700	9001701	9001702	9001703	9001704	9001705	9001706	9001707	9001708
	19 (48.3)	9001709	9001710	9001711	9001712	9001713	9001714	9001715	9001716	9001717
	20 (50.8)	9001718	9001719	9001720	9001721	9001722	9001723	9001724	9001725	9001726
	21 (53.3)	9001727	9001728	9001729	9001730	9001731	9001732	9001733	9001734	9001735
	22 (55.9)	9001736	9001737	9001738	9001739	9001740	9001741	9001742	9001743	9001744

MAKE SURE TO HAVE YOUR SERIAL NUMBER NEARBY WHEN ORDERING PARTS FOR YOUR MOTION COMPOSITES WHEELCHAIR

9002546_9002644
Sliding Seat Slings with Loop (Specify Size)

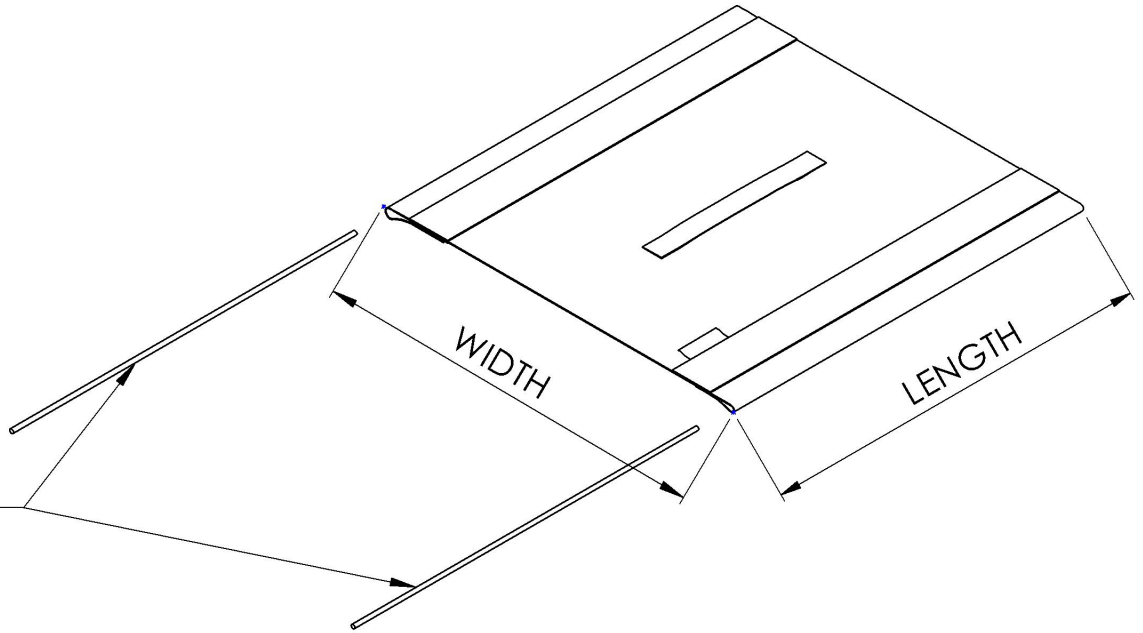

REPLACEMENT PARTS	
1x 12"Slotted Tube Guide	12173
1x 13"Slotted Tube Guide	12174
1x 14"Slotted Tube Guide	12175
1x 15"Slotted Tube Guide	12176
1x 16"Slotted Tube Guide	12177
1x 17"Slotted Tube Guide	12178
1x 18"Slotted Tube Guide	12179
1x 19"Slotted Tube Guide	12180
1x 20"Slotted Tube Guide	12181

		LENGTH in inches (cm)								
		12 (30.5)	13 (33.0)	14 (35.6)	15 (38.1)	16 (40.6)	17 (43.2)	18 (45.7)	19 (48.3)	20 (50.8)
WIDTH in inches (cm)	12 (30.5)	9002546	9002547	9002548	9002549	9002550	9002551	9002552	9002553	9002554
	13 (33.0)	9002555	9002556	9002557	9002558	9002559	9002560	9002561	9002562	9002563
	14 (35.6)	9002564	9002565	9002566	9002567	9002568	9002569	9002570	9002571	9002572
	15 (38.1)	9002573	9002574	9002575	9002576	9002577	9002578	9002579	9002580	9002581
	16 (40.6)	9002582	9002583	9002584	9002585	9002586	9002587	9002588	9002589	9002590
	17 (43.2)	9002591	9002592	9002593	9002594	9002595	9002596	9002597	9002598	9002599
	18 (45.7)	9002600	9002601	9002602	9002603	9002604	9002605	9002606	9002607	9002608
	19 (48.3)	9002609	9002610	9002611	9002612	9002613	9002614	9002615	9002616	9002617
	20 (50.8)	9002618	9002619	9002620	9002621	9002622	9002623	9002624	9002625	9002626
	21 (53.3)	9002627	9002628	9002629	9002630	9002631	9002632	9002633	9002634	9002635
	22 (55.9)	9002636	9002637	9002638	9002639	9002640	9002641	9002642	9002643	9002644

MAKE SURE TO HAVE YOUR SERIAL NUMBER NEARBY WHEN ORDERING PARTS FOR YOUR MOTION COMPOSITES WHEELCHAIR

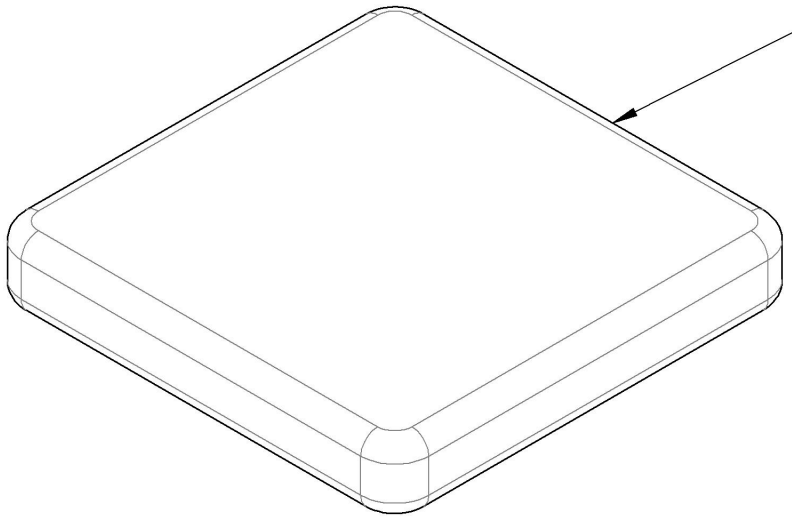

2 in CUSHIONS
REFER TO ITEM
#9001934_9002032 (with Loop)
or
#9002645_9002743 (with Hook)
for LENGTH & WIDTH

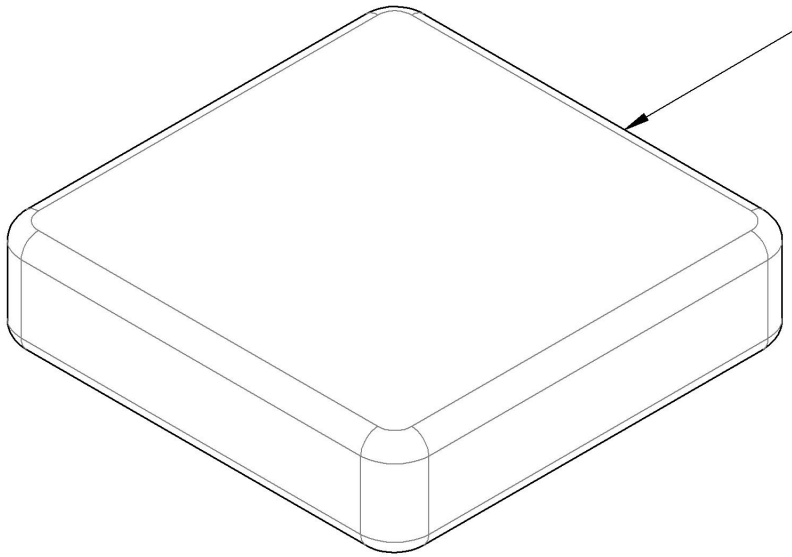

3 in CUSHIONS
REFER TO ITEM
#9002033_9002131 (with Loop)
or
#9002744_9002842 (with Hook)
for LENGTH & WIDTH

9001934_9002032
Cushion 2 in with Velcro Loop (Specifiy Size)

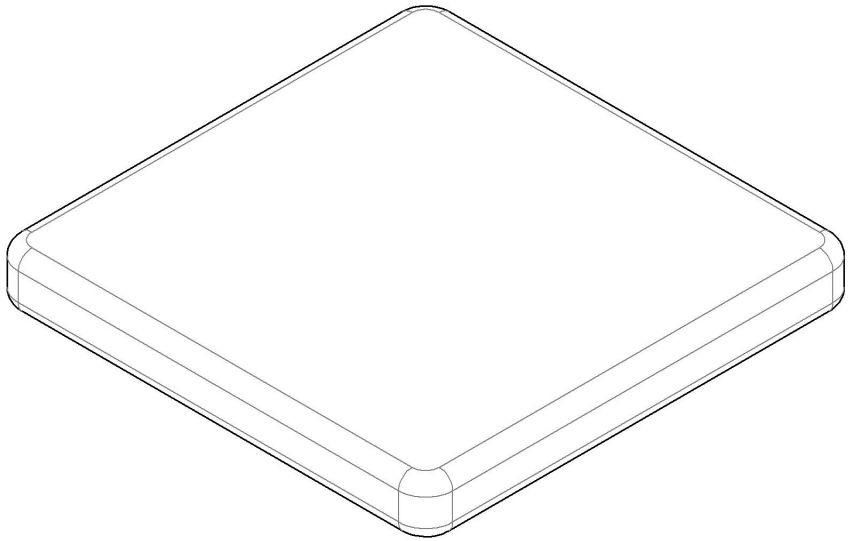

2 in CUSHIONS PART NUMBERS FOR THE APPROPRIATE LENGTH AND WIDTH										
		LENGTH in inches (cm)								
		12 (30.5)	13 (33.0)	14 (35.6)	15 (38.1)	16 (40.6)	17 (43.2)	18 (45.7)	19 (48.3)	20 (50.8)
WIDTH in inches (cm)	12 (30.5)	9001934	9001935	9001936	9001937	9001938	9001939	9001940	9001941	9001942
	13 (33.0)	9001943	9001944	9001945	9001946	9001947	9001948	9001949	9001950	9001951
	14 (35.6)	9001952	9001953	9001954	9001955	9001956	9001957	9001958	9001959	9001960
	15 (38.1)	9001961	9001962	9001963	9001964	9001965	9001966	9001967	9001968	9001969
	16 (40.6)	9001970	9001971	9001972	9001973	9001974	9001975	9001976	9001977	9001978
	17 (43.2)	9001979	9001980	9001981	9001982	9001983	9001984	9001985	9001986	9001987
	18 (45.7)	9001988	9001989	9001990	9001991	9001992	9001993	9001994	9001995	9001996
	19 (48.3)	9001997	9001998	9001999	9002000	9002001	9002002	9002003	9002004	9002005
	20 (50.8)	9002006	9002007	9002008	9002009	9002010	9002011	9002012	9002013	9002014
	21 (53.3)	9002015	9002016	9002017	9002018	9002019	9002020	9002021	9002022	9002023
	22 (55.9)	9002024	9002025	9002026	9002027	9002028	9002029	9002030	9002031	9002032

9002033_9002131
Cushion 3 in with Velcro Loop (Specifiy Size)

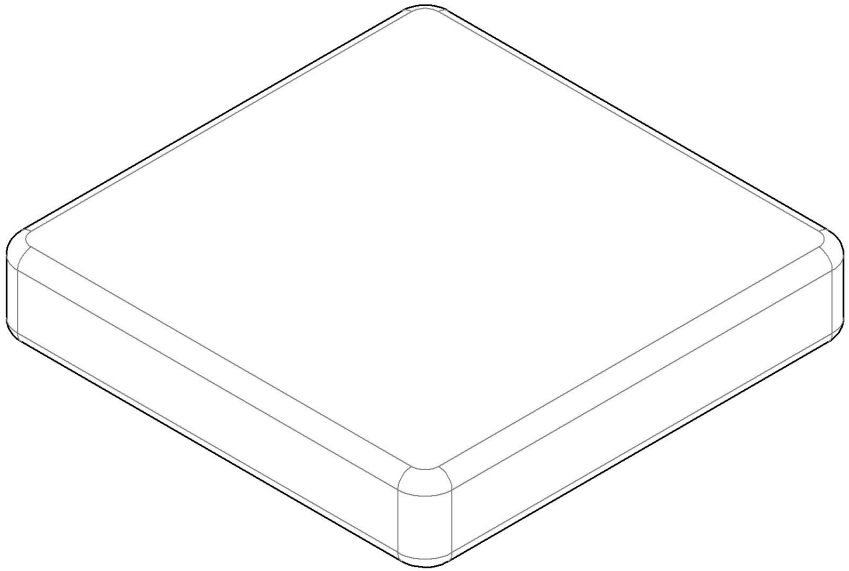

3 in CUSHIONS PART NUMBERS FOR THE APPROPRIATE LENGTH AND WIDTH										
		LENGTH in inches (cm)								
		12 (30.5)	13 (33.0)	14 (35.6)	15 (38.1)	16 (40.6)	17 (43.2)	18 (45.7)	19 (48.3)	20 (50.8)
WIDTH in inches (cm)	12 (30.5)	9002033	9002034	9002035	9002036	9002037	9002038	9002039	9002040	9002041
	13 (33.0)	9002042	9002043	9002044	9002045	9002046	9002047	9002048	9002049	9002050
	14 (35.6)	9002051	9002052	9002053	9002054	9002055	9002056	9002057	9002058	9002059
	15 (38.1)	9002060	9002061	9002062	9002063	9002064	9002065	9002066	9002067	9002068
	16 (40.6)	9002069	9002070	9002071	9002072	9002073	9002074	9002075	9002076	9002077
	17 (43.2)	9002078	9002079	9002080	9002081	9002082	9002083	9002084	9002085	9002086
	18 (45.7)	9002087	9002088	9002089	9002090	9002091	9002092	9002093	9002094	9002095
	19 (48.3)	9002096	9002097	9002098	9002099	9002100	9002101	9002102	9002103	9002104
	20 (50.8)	9002105	9002106	9002107	9002108	9002109	9002110	9002111	9002112	9002113
	21 (53.3)	9002114	9002115	9002116	9002117	9002118	9002119	9002120	9002121	9002122
	22 (55.9)	9002123	9002124	9002125	9002126	9002127	9002128	9002129	9002130	9002131

MAKE SURE TO HAVE YOUR SERIAL NUMBER
NEARBY WHEN ORDERING PARTS FOR YOUR
MOTION COMPOSITES WHEELCHAIR

9002645_9002743
Cushion 2 in with Velcro Hook (Specify size)

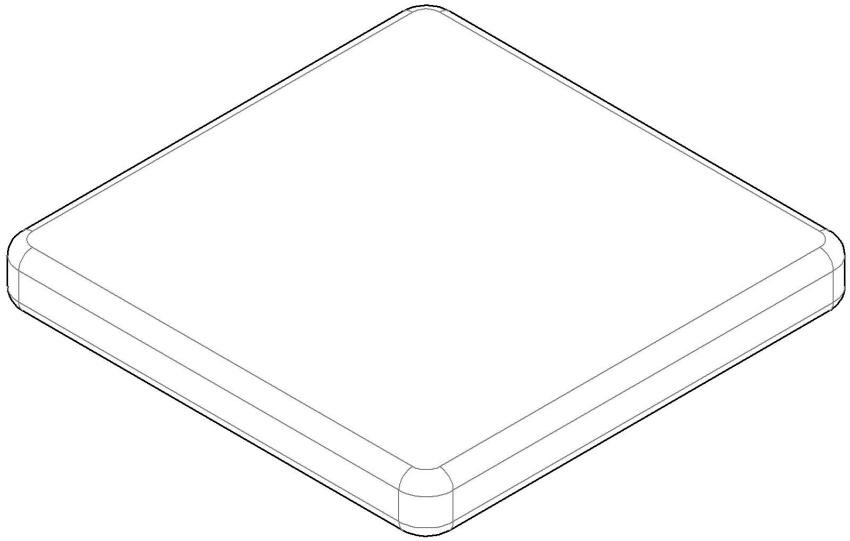

2'' CUSHIONS PART NUMBERS FOR THE APPROPRIATE LENGTH AND WIDTH										
		LENGTH in inches (cm)								
		12 (30.5)	13 (33.0)	14 (35.6)	15 (38.1)	16 (40.6)	17 (43.2)	18 (45.7)	19 (48.3)	20 (50.8)
WIDTH in inches (cm)	12 (30.5)	9002645	9002646	9002647	9002648	9002649	9002650	9002651	9002652	9002653
	13 (33.0)	9002654	9002655	9002656	9002657	9002658	9002659	9002660	9002661	9002662
	14 (35.6)	9002663	9002664	9002665	9002666	9002667	9002668	9002669	9002670	9002671
	15 (38.1)	9002672	9002673	9002674	9002675	9002676	9002677	9002678	9002679	9002680
	16 (40.6)	9002681	9002682	9002683	9002684	9002685	9002686	9002687	9002688	9002689
	17 (43.2)	9002690	9002691	9002692	9002693	9002694	9002695	9002696	9002697	9002698
	18 (45.7)	9002699	9002700	9002701	9002702	9002703	9002704	9002705	9002706	9002707
	19 (48.3)	9002708	9002709	9002710	9002711	9002712	9002713	9002714	9002715	9002716
	20 (50.8)	9002717	9002718	9002719	9002720	9002721	9002722	9002723	9002724	9002725
	21 (53.3)	9002726	9002727	9002728	9002729	9002730	9002731	9002732	9002733	9002734
	22 (55.9)	9002735	9002736	9002737	9002738	9002739	9002740	9002741	9002742	9002743

9002744_9002842
Cushion 3 in with Velcro Hook (Specifiy Size)

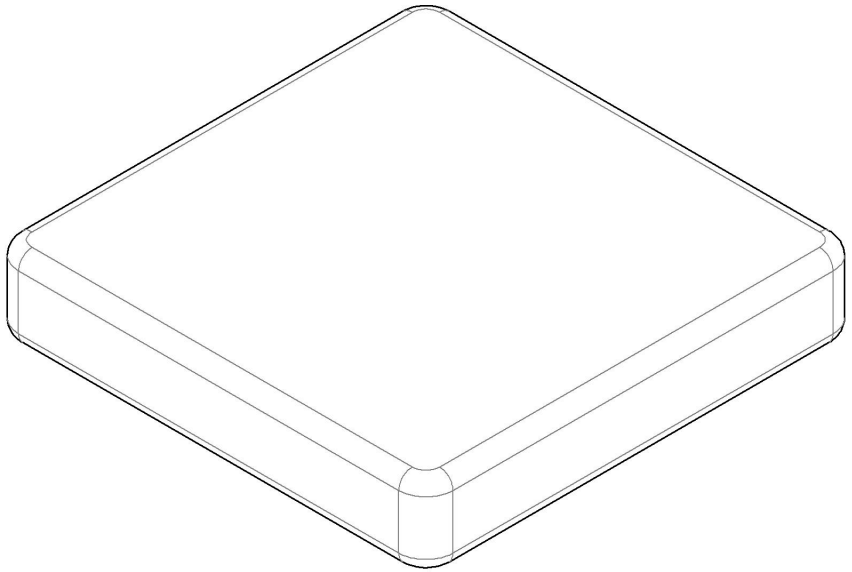

3'' CUSHIONS PART NUMBERS FOR THE APPROPRIATE LENGTH AND WIDTH										
		LENGTH in inches (cm)								
		12 (30.5)	13 (33.0)	14 (35.6)	15 (38.1)	16 (40.6)	17 (43.2)	18 (45.7)	19 (48.3)	20 (50.8)
WIDTH in inches (cm)	12 (30.5)	9002744	9002745	9002746	9002747	9002748	9002749	9002750	9002751	9002752
	13 (33.0)	9002753	9002754	9002755	9002756	9002757	9002758	9002759	9002760	9002761
	14 (35.6)	9002762	9002763	9002764	9002765	9002766	9002767	9002768	9002769	9002770
	15 (38.1)	9002771	9002772	9002773	9002774	9002775	9002776	9002777	9002778	9002779
	16 (40.6)	9002780	9002781	9002782	9002783	9002784	9002785	9002786	9002787	9002788
	17 (43.2)	9002789	9002790	9002791	9002792	9002793	9002794	9002795	9002796	9002797
	18 (45.7)	9002798	9002799	9002800	9002801	9002802	9002803	9002804	9002805	9002806
	19 (48.3)	9002807	9002808	9002809	9002810	9002811	9002812	9002813	9002814	9002815
	20 (50.8)	9002816	9002817	9002818	9002819	9002820	9002821	9002822	9002823	9002824
	21 (53.3)	9002825	9002826	9002827	9002828	9002829	9002830	9002831	9002832	9002833
	22 (55.9)	9002834	9002835	9002836	9002837	9002838	9002839	9002840	9002841	9002842

Rear Wheels Catalogue
Rear Wheels & Spokes

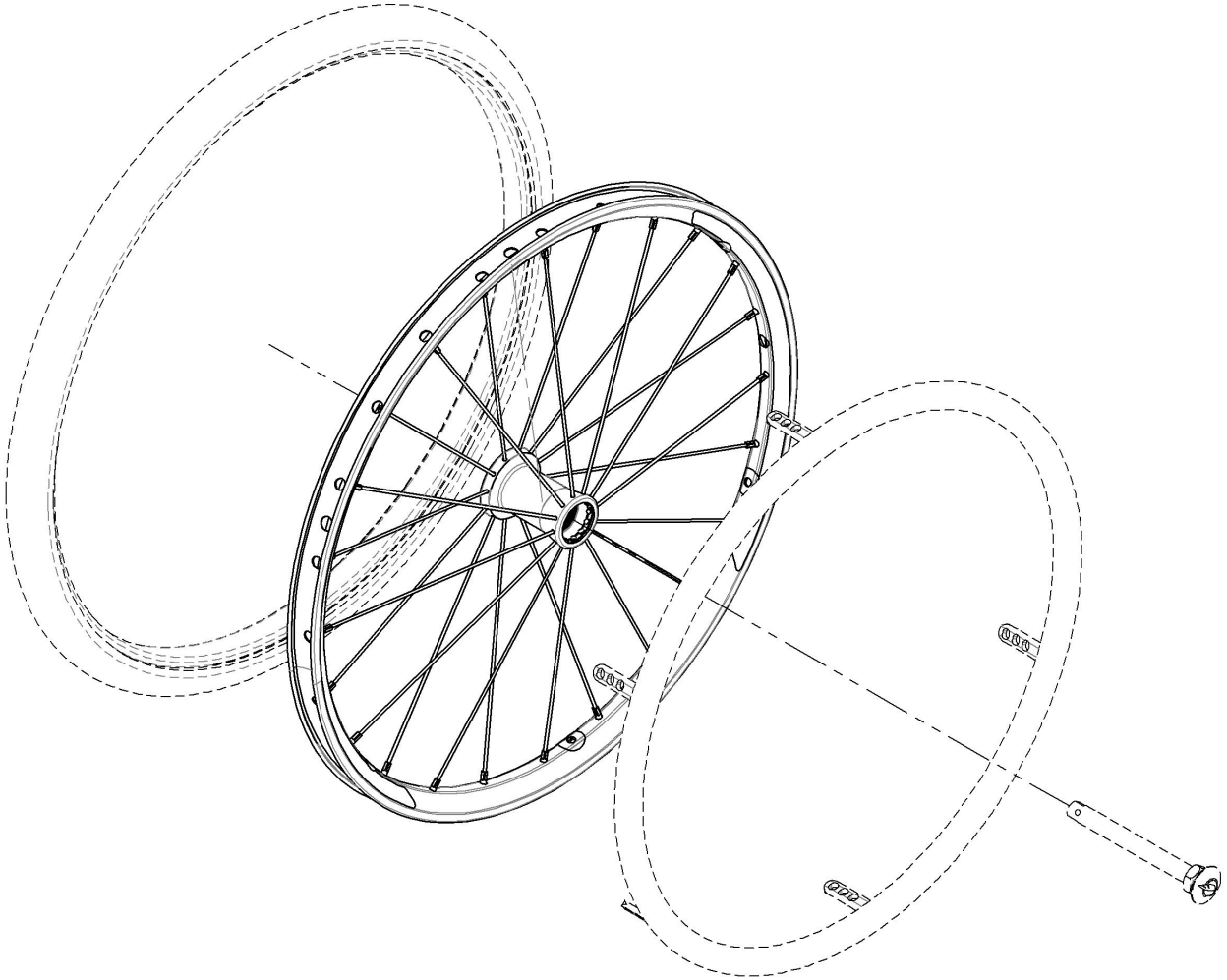

ITEM NO.	PARTNO	DESCRIPTION	QTY.
1	9001483	Rear Wheel - Mag, 20 in	1
2	9001484	Rear Wheel - Mag, 22 in	1
3	9001485	Rear Wheel - Mag, 24 in	1
4	9001446	Rear Wheel - Newton One, 20 in	1
5	9001486	Rear Wheel - Newton One, 22 in	1
6	9001487	Rear Wheel - Newton One, 24 in	1
7	9001488	Rear Wheel - Newton Gravity, 20 in	1
8	9001489	Rear Wheel - Newton Gravity, 22 in	1
9	9001490	Rear Wheel - Newton Gravity, 24 in	1
10	9001491	Rear Wheel - Newton Gravity, 25 in	1
11	9001492	Rear Wheel - Newton Gravity, 26 in	1

MAG WHEEL CAP REPLACEMENT

FOR 9001483, 9001484 & 9001485

Part#: **21108**

BEARING REPLACEMENT

FOR ALL REAR WHEELS

Part#: **22011**

HARDWARE INCLUDED WITH ALL NEWTON ONE WHEELS

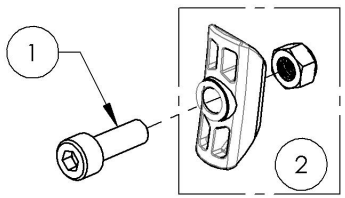

ITEM NO.	PARTNO	DESCRIPTION	9001446 /QTY.	9001486 /QTY.	9001487 /QTY.
1	90746	SOCKET CAP SCREW M5X0.8 X 15mm LONG, FULLY THREADED + BLUE TREADLOCKER - BLACK ZINC	6	6	6
2	21500	REAR WHEEL LOCKNUT INSERT - ASSEMBLY	6	6	6

WHEEL SPOKES					
	NEWTON ONE (24)	NEWTON ONE (36)	NEWTON GRAVITY (24)		
	EXT. & INT. SILVER	EXT. & INT. SILVER	EXT. WHITE (1)	EXT.BLACK (11)	INT. BLACK (12)
20"	21271 (1)		21157	21156 (1)	21155 (1)
22"		21153 (1)	21160	21159 (1)	21158 (1)
24"		21154 (1)	21163	21162 (1)	21161 (1)
25"	-	-	21166	21165 (1)	21164 (1)
26"	-	-	21169	21168 (1)	21167 (1)
NIPPLE	21181 (SILVER NIPPLE)		21180 (BLACK NIPPLE)		

MAKE SURE TO HAVE YOUR SERIAL NUMBER NEARBY WHEN ORDERING PARTS FOR YOUR MOTION COMPOSITES WHEELCHAIR

Rear Wheels Catalogue
Spinergy Rear Wheels

BEARING REPLACEMENT

FOR ALL REAR WHEELS

Part#: **22011**

SPINERGY SPOX

SPINERGY LX

ITEM NO.	PARTNO	DESCRIPTION	QTY
1	9001494	Rear Wheel - Spinergy Spox, 22 in, Black	1
2	9001495	Rear Wheel - Spinergy Spox, 24 in, Black	1
3	9001496	Rear Wheel - Spinergy Spox, 25 in, Black	1
4	9001497	Rear Wheel - Spinergy Spox, 26 in, Black	1
5	9003413	Rear Wheel - Spinergy Spox, 22 in, Blue	1
6	9003414	Rear Wheel - Spinergy Spox, 24 in, Blue	1
7	9003415	Rear Wheel - Spinergy Spox, 25 in, Blue	1
8	9003416	Rear Wheel - Spinergy Spox, 26 in, Blue	1
9	9003418	Rear Wheel - Spinergy Spox, 22 in, Red	1
10	9003419	Rear Wheel - Spinergy Spox, 24 in, Red	1
11	9003420	Rear Wheel - Spinergy Spox, 25 in, Red	1
12	9003421	Rear Wheel - Spinergy Spox, 26 in, Red	1
13	9003433	Rear Wheel - Spinergy Spox, 22 in, Yellow	1
14	9003434	Rear Wheel - Spinergy Spox, 24 in, Yellow	1
15	9003435	Rear Wheel - Spinergy Spox, 25 in, Yellow	1
16	9003436	Rear Wheel - Spinergy Spox, 26 in, Yellow	1
17	9003443	Rear Wheel - Spinergy Spox, 22 in, White	1
18	9003444	Rear Wheel - Spinergy Spox, 24 in, White	1
19	9003445	Rear Wheel - Spinergy Spox, 25 in, White	1
20	9003446	Rear Wheel - Spinergy Spox, 26 in, White	1

ITEM NO.	PARTNO	DESCRIPTION	QTY.
21	9001498	Rear Wheel - Spinergy LX, 22 in, Black	1
22	9001499	Rear Wheel - Spinergy LX, 24 in, Black	1
23	9001500	Rear Wheel - Spinergy LX, 25 in, Black	1
24	9001501	Rear Wheel - Spinergy LX, 26 in, Black	1
25	9003448	Rear Wheel - Spinergy LX, 22 in, Blue	1
26	9003449	Rear Wheel - Spinergy LX, 24 in, Blue	1
27	9003450	Rear Wheel - Spinergy LX, 25 in, Blue	1
28	9003451	Rear Wheel - Spinergy LX, 26 in, Blue	1
29	9003453	Rear Wheel - Spinergy LX, 22 in, Red	1
30	9003454	Rear Wheel - Spinergy LX, 24 in, Red	1
31	9003455	Rear Wheel - Spinergy LX, 25 in, Red	1
32	9003456	Rear Wheel - Spinergy LX, 26 in, Red	1
33	9003458	Rear Wheel - Spinergy LX, 22 in, Green	1
34	9003459	Rear Wheel - Spinergy LX, 24 in, Green	1
35	9003460	Rear Wheel - Spinergy LX, 25 in, Green	1
36	9003461	Rear Wheel - Spinergy LX, 26 in, Green	1
37	9003463	Rear Wheel - Spinergy LX, 22 in, Orange	1
38	9003464	Rear Wheel - Spinergy LX, 24 in, Orange	1
39	9003465	Rear Wheel - Spinergy LX, 25 in, Orange	1
40	9003466	Rear Wheel - Spinergy LX, 26 in, Orange	1
41	9003468	Rear Wheel - Spinergy LX, 22 in, Yellow	1
42	9003469	Rear Wheel - Spinergy LX, 24 in, Yellow	1
43	9003470	Rear Wheel - Spinergy LX, 25 in, Yellow	1
44	9003471	Rear Wheel - Spinergy LX, 26 in, Yellow	1
45	9003473	Rear Wheel - Spinergy LX, 22 in, Pink	1
46	9003474	Rear Wheel - Spinergy LX, 24 in, Pink	1
47	9003475	Rear Wheel - Spinergy LX, 25 in, Pink	1
48	9003476	Rear Wheel - Spinergy LX, 26 in, Pink	1
49	9003478	Rear Wheel - Spinergy LX, 22 in, White	1
50	9003479	Rear Wheel - Spinergy LX, 24 in, White	1
51	9003480	Rear Wheel - Spinergy LX, 25 in, White	1
52	9003481	Rear Wheel - Spinergy LX, 26 in, White	1
53	9003482	Rear Wheel - Spinergy LX, 22 in, Purple	1
54	9003483	Rear Wheel - Spinergy LX, 24 in, Purple	1
55	9003484	Rear Wheel - Spinergy LX, 25 in, Purple	1
56	9003485	Rear Wheel - Spinergy LX, 26 in, Purple	1

ONLY COLORS AVAILABLE FOR SPINERGY SPOX

MAKE SURE TO HAVE YOUR SERIAL NUMBER NEARBY WHEN ORDERING PARTS FOR YOUR MOTION COMPOSITES WHEELCHAIR

Rear Wheels Catalogue
Spinergy CLX Blade Rear Wheels

ITEM NO.	PARTNO	DESCRIPTION	QTY
1	9008122	Rear Wheel - Spinergy CLX Blade, 24 in, Black	1
2	9008123	Rear Wheel - Spinergy CLX Blade, 25 in, Black	1
3	9008127	Rear Wheel - Spinergy CLX Blade, 24 in, Blue	1
4	9008128	Rear Wheel - Spinergy CLX Blade, 25 in, Blue	1
5	9008132	Rear Wheel - Spinergy CLX Blade, 24 in, Red	1
6	9008133	Rear Wheel - Spinergy CLX Blade, 25 in, Red	1
7	9008137	Rear Wheel - Spinergy CLX Blade, 24 in, Green	1
8	9008138	Rear Wheel - Spinergy CLX Blade, 25 in, Green	1
9	9008142	Rear Wheel - Spinergy CLX Blade, 24 in, Orange	1
10	9008143	Rear Wheel - Spinergy CLX Blade, 25 in, Orange	1
11	9008147	Rear Wheel - Spinergy CLX Blade, 24 in, Yellow	1
12	9008148	Rear Wheel - Spinergy CLX Blade, 25 in, Yellow	1
13	9008152	Rear Wheel - Spinergy CLX Blade, 24 in, Pink	1
14	9008153	Rear Wheel - Spinergy CLX Blade, 25 in, Pink	1
15	9008157	Rear Wheel - Spinergy CLX Blade, 24 in, White	1
16	9008158	Rear Wheel - Spinergy CLX Blade, 25 in, White	1
17	9008162	Rear Wheel - Spinergy CLX Blade, 24 in, Purple	1
18	9008163	Rear Wheel - Spinergy CLX Blade, 25 in, Purple	1

SPINERGY CLX BLADE

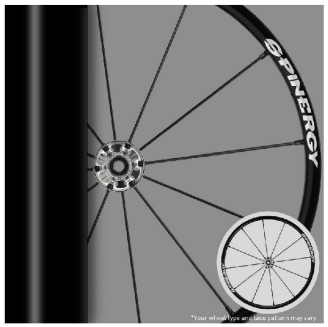

BEARING REPLACEMENT
FOR ALL REAR WHEELS

Part#: **22011**

MAKE SURE TO HAVE YOUR SERIAL NUMBER NEARBY WHEN ORDERING PARTS FOR YOUR MOTION COMPOSITES WHEELCHAIR

Rear Wheels Catalogue
Tires

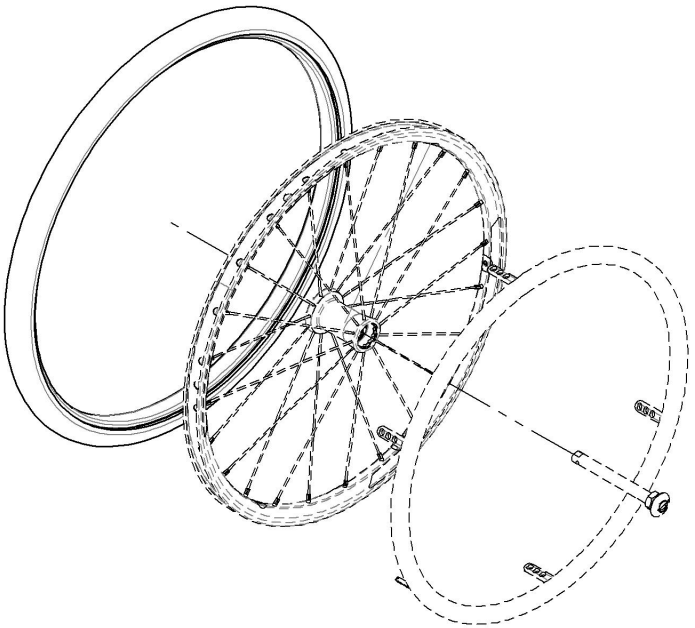

TUBE AND RIM TAPE ARE ALREADY INCLUDED WITH ALL PNEUMATIC TIRES

ITEM NO.	PARTNO	DESCRIPTION	QTY.
1	**9001507**	**Tire - Soft Urethane, 1 1/4 x 20 in**	**1**
2	**9001508**	**Tire - Soft Urethane, 1 1/4 x 22 in**	**1**
3	**9001509**	**Tire - Soft Urethane, 1 1/4 x 24 in**	**1**
4	**9001510**	**Tire & Components - Pneumatic, Standard Pressure, 1 3/8 x 20 in**	**1**
	21315	PNEUMATIC TIRE 20x1-3/8in	1
	21255	20" x1⅜" TUBE	1
	21064	RIM TAPE 20in	1
5	**9001511**	**Tire & Components - Pneumatic, Standard Pressure, 1 3/8 x 22 in**	**1**
	21316	PNEUMATIC TIRE 22x1-3/8in	1
	21256	22" x1⅜" TUBE	1
	21065	RIM TAPE 22in	1
6	**9001512**	**Tire & Components - Pneumatic, Standard Pressure, 1 3/8 x 24 in**	**1**
	21317	PNEUMATIC TIRE 24x1-3/8in	1
	21257	24" x1⅜" TUBE	1
	21066	RIM TAPE 24in	1
7	**9001513**	**Tire & Components - Pneumatic, Standard Pressure, 1 3/8 x 25 in**	**1**
	21318	PNEUMATIC TIRE 25x1-3/8in	1
	21253	25"x1" TUBE	1
	21067	RIM TAPE 25in	1
8	**9001514**	**Tire & Components - Pneumatic, Standard Pressure, 1 3/8 x 26 in**	**1**
	21319	PNEUMATIC TIRE 26x1-3/8in	1
	21259	26" x1⅜" TUBE	1
	21068	RIM TAPE 26in	1
9	**9001515**	**Tire - Pyramid, 1 x 22 in**	**1**
10	**9001516**	**Tire - Pyramid, 1 x 24 in**	**1**
11	**9001517**	**Tire & Components - Schwalbe Rightrun HP, 1 x 20 in**	**1**
	21305	IRONCAP/RIGHTRUN 1" HP TIRE 20"	1
	21250	20"x1" TUBE	1
	21064	RIM TAPE 20in	1
12	**9001518**	**Tire & Components - Schwalbe Rightrun HP, 1 x 22 in**	**1**
	21306	IRONCAP/RIGHTRUN 1" HP TIRE 22"	1
	21251	22"x1" TUBE	1
	21065	RIM TAPE 22in	1
13	**9001519**	**Tire & Components - Schwalbe Rightrun HP, 1 x 24 in**	**1**
	21307	IRONCAP/RIGHTRUN 1" HP TIRE 24"	1
	21252	24"x1" TUBE	1
	21066	RIM TAPE 24in	1
14	**9001520**	**Tire & Components - Schwalbe Rightrun HP, 1 x 25 in**	**1**
	21308	IRONCAP/RIGHTRUN 1" HP TIRE 25"	1
	21253	25"x1" TUBE	1
	21067	RIM TAPE 25in	1
15	**9001521**	**Tire & Components - Schwalbe Rightrun HP, 1 x 26 in**	**1**
	21309	IRONCAP/RIGHTRUN 1" HP TIRE 26"	1
	21254	26"x1" TUBE	1
	21068	RIM TAPE 26in	1

ITEM NO.	PARTNO	DESCRIPTION	QTY.
16	**9001522**	**Tire & Components - Kenda Kourier HP, 1 3/8 x 24 in**	**1**
	21322	24"x1⅜" KOURIER TIRE	1
	21257	24" x1⅜" TUBE	1
	21066	RIM TAPE 24in	1
17	**9001523**	**Tire & Components - Kenda Kourier HP, 1 3/8 x 26 in**	**1**
	21324	26"x1⅜" KOURIER TIRE	1
	21259	26" x1⅜" TUBE	1
	21068	RIM TAPE 26in	1
18	**9001524**	**Tire - Soft Urethane SHOX HP, 1 x 22 in**	**1**
19	**9001525**	**Tire - Soft Urethane SHOX HP, 1 x 24 in**	**1**
20	**9001526**	**Tire - Soft Urethane SHOX HP, 1 x 25 in**	**1**
21	**9001527**	**Tire - Soft Urethane SHOX HP, 1 x 26 in**	**1**
22	**9001528**	**Tire & Components - Schwalbe Marathon Plus, 1 x 24 in**	**1**
	21252	24"x1" TUBE	1
	21066	RIM TAPE 24in	1
	21312	24x1in HP TIRE MARATHON PLUS	1
23	**9001529**	**Tire & Components - Schwalbe Marathon Plus, 1 x 25 in**	**1**
	21253	25"x1" TUBE	1
	21067	RIM TAPE 25in	1
	21313	25x1in HP TIRE MARATHON PLUS	1
24	**9001530**	**Tire & Components - Schwalbe Marathon Plus, 1 x 26 in**	**1**
	21254	26"x1" TUBE	1
	21068	RIM TAPE 26in	1
	21314	26x1in HP TIRE MARATHON PLUS	1
25	**9002521**	**Tire - Soft Urethane, Knobby, 1 3/8 x 22 in**	**1**
26	**9002235**	**Tire - Soft Urethane, Knobby, 1 3/8 x 24 in**	**1**
27	**9002264**	**Tire - Soft Urethane, Knobby, 1 3/8 x 25 in**	**1**
28	**9002265**	**Tire - Soft Urethane, Knobby, 1 3/8 x 26 in**	**1**
29	**9003044**	**Tire & Components - Pneumatic, Knobby, 2 x 22 in**	**1**
	21379	22inX2in KNOBBY STYLE PNEUMATIC TIRE	1
	21265	22inx2in TUBE	1
	21065	RIM TAPE 22in	1
30	**9003045**	**Tire & Components - Pneumatic, Knobby, 2 x 24 in**	**1**
	21380	24inX2in KNOBBY STYLE PNEUMATIC TIRE	1
	21266	24inx2in TUBE	1
	21066	RIM TAPE 24in	1
31	**9003046**	**Tire & Components - Pneumatic, Knobby, 2 x 25 in**	**1**
	21381	25inX2in KNOBBY STYLE PNEUMATIC TIRE	1
	21267	25inx2in TUBE	1
	21067	RIM TAPE 25in	1

MAKE SURE TO HAVE YOUR SERIAL NUMBER NEARBY WHEN ORDERING PARTS FOR YOUR MOTION COMPOSITES WHEELCHAIR

CUTTING FEES

Available only for 9001537, 9001539, 9001540 & 9001541

9003632

Handrim Tabs cutting, Narrow Position

9003633

Handrim Tabs cutting, Super Narrow Position

HANDRIM TAB STICKERS

9003634

Contact Joint Stickers for Handrim Tabs

ITEM NO.	PARTNO	DESCRIPTION	QTY.
1	9001531	Handrim For Mag - Anodized Aluminum, 20 in	1
2	9001532	Handrim For Mag - Anodized Aluminum, 22 in	1
3	9001533	Handrim For Mag - Anodized Aluminum, 24 in	1
4	9001534	Handrim For Mag - Plastic Coated, 20 in	1
5	9001535	Handrim For Mag - Plastic Coated, 22 in	1
6	9001536	Handrim For Mag - Plastic Coated, 24 in	1
7	9001537	Handrim - Anodized Aluminum, 20 in	1
8	9001538	Handrim - Anodized Aluminum, 22 in	1
9	9001539	Handrim - Anodized Aluminum, 24 in	1
10	9001540	Handrim - Anodized Aluminum, 25 in	1
11	9001541	Handrim - Anodized Aluminum, 26 in	1
12	9001542	Handrim - Plastic Coated, 20 in	1
13	9001543	Handrim - Plastic Coated, 22 in	1
14	9001544	Handrim - Plastic Coated, 24 in	1
15	9001545	Handrim - Plastic Coated, 25 in	1
16	9001546	Handrim - Plastic Coated, 26 in	1
17	9001548	Handrim - Q-Grip High Friction Coated Foam, 22 in	1
18	9001549	Handrim - Q-Grip High Friction Coated Foam, 24 in	1
19	9001550	Handrim - Q-Grip High Friction Coated Foam, 25 in	1
20	9001551	Handrim - Q-Grip High Friction Coated Foam, 26 in	1

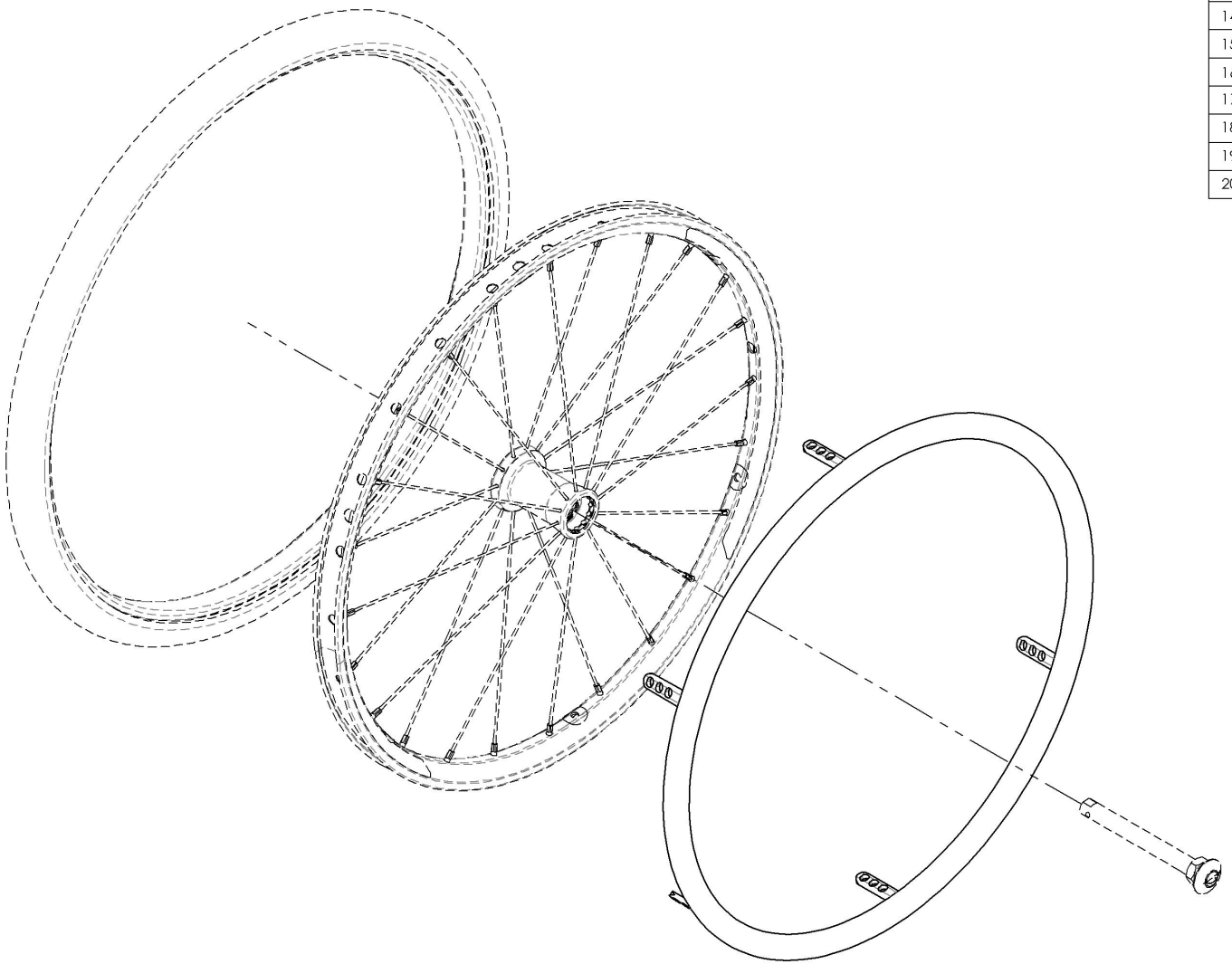

MAKE SURE TO HAVE YOUR SERIAL NUMBER NEARBY WHEN ORDERING PARTS FOR YOUR MOTION COMPOSITES WHEELCHAIR

Rear Wheels Catalogue
Surge & Natural Fit Handrims

ITEM NO.	PARTNO	DESCRIPTION	QTY
1	9002209	Handrim - Surge, 22 in	1
2	9002210	Handrim - Surge, 24 in	1
3	9002211	Handrim - Surge, 25 in	1
4	9002212	Handrim - Surge, 26 in	1
5	9001555	Handrim - Surge LT, 22 in	1
6	9001556	Handrim - Surge LT, 24 in	1
7	9001576	Handrim - Surge LT, 25 in	1
8	9001578	Handrim - Surge LT, 26 in	1
9	9003274	Handrim - Natural Fit, 22 in	1
10	9003275	Handrim - Natural Fit, 24 in	1
11	9003276	Handrim - Natural Fit, 25 in	1
12	9003277	Handrim - Natural Fit, 26 in	1
13	9001552	Handrim - Natural Fit, Standard Grip, 22 in	1
	21221	NATURAL FIT HANDRIM 22in	1
	21226	NATURAL FIT THUMB PIECE 22in	1
14	9001553	Handrim - Natural Fit, Standard Grip, 24 in	1
	21222	NATURAL FIT HANDRIM 24in	1
	21227	NATURAL FIT THUMB PIECE 24in	1
15	9002849	Handrim - Natural Fit, Standard Grip, 25 in	1
	21223	NATURAL FIT HANDRIM 25in	1
	21228	NATURAL FIT THUMB PIECE 25in	1
16	9001554	Handrim - Natural Fit, Standard Grip, 26 in	1
	21224	NATURAL FIT HANDRIM 26in	1
	21229	NATURAL FIT THUMB PIECE 26in	1

Standard Grip

Super Grip

ITEM NO.	PARTNO	DESCRIPTION	QTY
17	9003278	Handrim - Natural Fit, Super Grip, 22 in	1
	21221	NATURAL FIT HANDRIM 22in	1
	21243	NATURAL FIT SUPER GRIP THUMB PIECE 22in	1
18	9003279	Handrim - Natural Fit, Super Grip, 24 in	1
	21222	NATURAL FIT HANDRIM 24in	1
	21244	NATURAL FIT SUPER GRIP THUMB PIECE 24in	1
19	9003280	Handrim - Natural Fit, Super Grip, 25 in	1
	21223	NATURAL FIT HANDRIM 25in	1
	21245	NATURAL FIT SUPER GRIP THUMB PIECE 25in	1
20	9003281	Handrim - Natural Fit, Super Grip, 26 in	1
	21224	NATURAL FIT HANDRIM 26in	1
	21246	NATURAL FIT SUPER GRIP THUMB PIECE 26in	1
21	9002206	Handrim - Natural Fit LT, 22 in	1
22	9002207	Handrim - Natural Fit LT, 24 in	1
23	9002147	Handrim - Natural Fit LT, 25 in	1
24	9002208	Handrim - Natural Fit LT, 26 in	1
25	9003282	Handrim - Natural Fit LT, Standard Grip, 22 in	1
	21272	NATURAL FIT LT HANDRIM 22in	1
	21226	NATURAL FIT THUMB PIECE 22in	1
26	9003283	Handrim - Natural Fit LT, Standard Grip, 24 in	1
	21273	NATURAL FIT LT HANDRIM 24in	1
	21227	NATURAL FIT THUMB PIECE 24in	1
27	9003284	Handrim - Natural Fit LT, Standard Grip, 25 in	1
	21274	NATURAL FIT LT HANDRIM 25in	1
	21228	NATURAL FIT THUMB PIECE 25in	1
28	9003285	Handrim - Natural Fit LT, Standard Grip, 26 in	1
	21275	NATURAL FIT LT HANDRIM 26in	1
	21229	NATURAL FIT THUMB PIECE 26in	1

The Natural-Fit

The Natural-Fit LT

MAKE SURE TO HAVE YOUR SERIAL NUMBER NEARBY WHEN ORDERING PARTS FOR YOUR MOTION COMPOSITES WHEELCHAIR

Rear Wheels Catalogue
Newton Air Grip Handrims

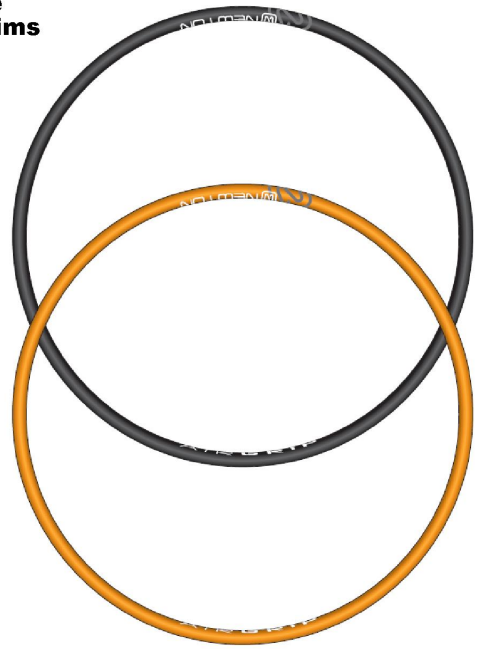

ITEM NO.	PARTNO	DESCRIPTION	QTY.
1	9002962	Handrim - Newton Air Grip, 20 in - Black	1
2	9002963	Handrim - Newton Air Grip, 22 in - Black	1
3	9002964	Handrim - Newton Air Grip, 24 in - Black	1
4	9002965	Handrim - Newton Air Grip, 25 in - Black	1
5	9002966	Handrim - Newton Air Grip, 26 in - Black	1
6	9002967	Handrim - Newton Air Grip, 20 in - Sunkissed Orange	1
7	9002968	Handrim - Newton Air Grip, 22 in - Sunkissed Orange	1
8	9002969	Handrim - Newton Air Grip, 24 in - Sunkissed Orange	1
9	9002970	Handrim - Newton Air Grip, 25 in - Sunkissed Orange	1
10	9002971	Handrim - Newton Air Grip, 26 in - Sunkissed Orange	1
11	9002972	Handrim - Newton Air Grip, 20 in - Steel Blue	1
12	9002973	Handrim - Newton Air Grip, 22 in - Steel Blue	1
13	9002974	Handrim - Newton Air Grip, 24 in - Steel Blue	1
14	9002975	Handrim - Newton Air Grip, 25 in - Steel Blue	1
15	9002976	Handrim - Newton Air Grip, 26 in - Steel Blue	1
16	9002977	Handrim - Newton Air Grip, 20 in - Sky Blue	1
17	9002978	Handrim - Newton Air Grip, 22 in - Sky Blue	1
18	9002979	Handrim - Newton Air Grip, 24 in - Sky Blue	1
19	9002980	Handrim - Newton Air Grip, 25 in - Sky Blue	1
20	9002981	Handrim - Newton Air Grip, 26 in - Sky Blue	1
21	9002982	Handrim - Newton Air Grip, 20 in - Charcoal	1
22	9002983	Handrim - Newton Air Grip, 22 in - Charcoal	1
23	9002984	Handrim - Newton Air Grip, 24 in - Charcoal	1
24	9002985	Handrim - Newton Air Grip, 25 in - Charcoal	1
25	9002986	Handrim - Newton Air Grip, 26 in - Charcoal	1
26	9002987	Handrim - Newton Air Grip, 20 in - Ferrari Red	1
27	9002988	Handrim - Newton Air Grip, 22 in - Ferrari Red	1
28	9002989	Handrim - Newton Air Grip, 24 in - Ferrari Red	1
29	9002990	Handrim - Newton Air Grip, 25 in - Ferrari Red	1
30	9002991	Handrim - Newton Air Grip, 26 in - Ferrari Red	1

ITEM NO.	PARTNO	DESCRIPTION	QTY.
31	9002992	Handrim - Newton Air Grip, 20 in - Sapphire Blue	1
32	9002993	Handrim - Newton Air Grip, 22 in - Sapphire Blue	1
33	9002994	Handrim - Newton Air Grip, 24 in - Sapphire Blue	1
34	9002995	Handrim - Newton Air Grip, 25 in - Sapphire Blue	1
35	9002996	Handrim - Newton Air Grip, 26 in - Sapphire Blue	1
36	9002997	Handrim - Newton Air Grip, 20 in - White	1
37	9002998	Handrim - Newton Air Grip, 22 in - White	1
38	9002999	Handrim - Newton Air Grip, 24 in - White	1
39	9003000	Handrim - Newton Air Grip, 25 in - White	1
40	9003001	Handrim - Newton Air Grip, 26 in - White	1
41	9003002	Handrim - Newton Air Grip, 20 in - Burgundy	1
42	9003003	Handrim - Newton Air Grip, 22 in - Burgundy	1
43	9003004	Handrim - Newton Air Grip, 24 in - Burgundy	1
44	9003005	Handrim - Newton Air Grip, 25 in - Burgundy	1
45	9003006	Handrim - Newton Air Grip, 26 in - Burgundy	1
46	9003007	Handrim - Newton Air Grip, 20 in - Monster Green	1
47	9003008	Handrim - Newton Air Grip, 22 in - Monster Green	1
48	9003009	Handrim - Newton Air Grip, 24 in - Monster Green	1
49	9003010	Handrim - Newton Air Grip, 25 in - Monster Green	1
50	9003011	Handrim - Newton Air Grip, 26 in - Monster Green	1
51	9003012	Handrim - Newton Air Grip, 20 in - Fuchsia	1
52	9003013	Handrim - Newton Air Grip, 22 in - Fuchsia	1
53	9003014	Handrim - Newton Air Grip, 24 in - Fuchsia	1
54	9003015	Handrim - Newton Air Grip, 25 in - Fuchsia	1
55	9003016	Handrim - Newton Air Grip, 26 in - Fuchsia	1
56	9003017	Handrim - Newton Air Grip, 20 in - Acid Green	1
57	9003018	Handrim - Newton Air Grip, 22 in - Acid Green	1
58	9003019	Handrim - Newton Air Grip, 24 in - Acid Green	1
59	9003020	Handrim - Newton Air Grip, 25 in - Acid Green	1
60	9003021	Handrim - Newton Air Grip, 26 in - Acid Green	1

CUTTING FEES

Only Available for 20, 24, 25 & 26 in Handrim

9003632

Handrim Tabs cutting, Narrow Position

9003633

Handrim Tabs cutting, Super Narrow Position

HANDRIM TAB STICKERS

9003634

Contact Joint Stickers for Handrim Tabs

MAKE SURE TO HAVE YOUR SERIAL NUMBER NEARBY WHEN ORDERING PARTS FOR YOUR MOTION COMPOSITES WHEELCHAIR

Rear Wheels Catalogue
BBraver Handrims

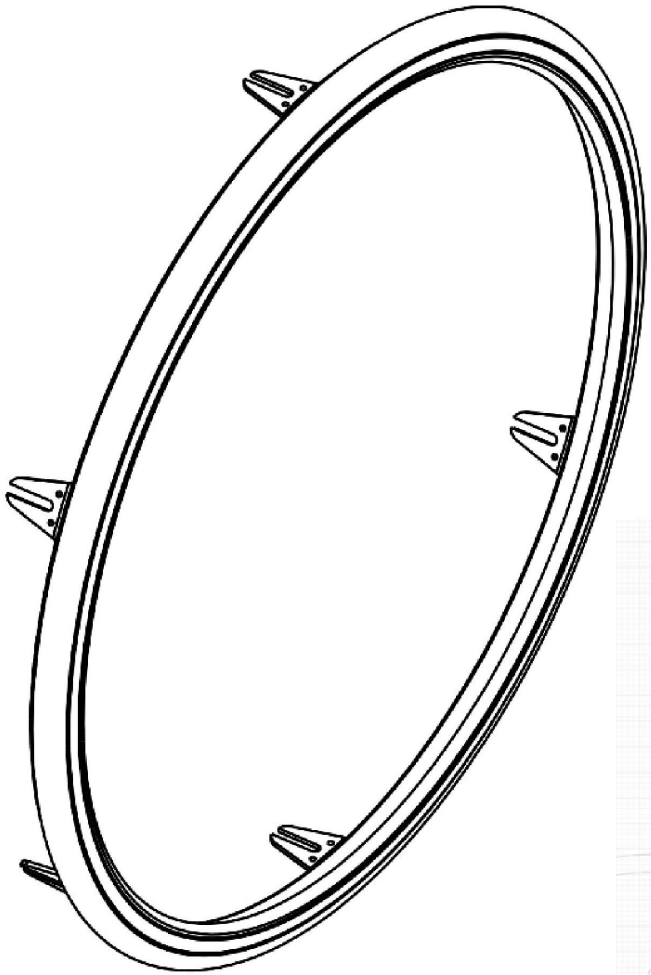

ITEM NO.	PARTNO	DESCRIPTION	QTY.
1	9002532	BBraver - Rough Rider Handrim, 24 in, White, Short (Pair) (RW-S-WW-24)	1
2	9002533	BBraver - Rough Rider Handrim, 24 in, White, Long (Pair) (RW-L-WW-24)	1
3	9002534	BBraver - Rough Rider Handrim, 25 in, White, Short (Pair) (RW-S-WW-25)	1
4	9002535	BBraver - Rough Rider Handrim, 25 in, White, Long (Pair) (RW-L-WW-25)	1
5	9002536	BBraver - Rough Rider Handrim, 24 in, Orange, Short (Pair) (RO-S-OB-24)	1
6	9002537	BBraver - Rough Rider Handrim, 24 in, Orange, Long (Pair) (RO-L-OB-24)	1
7	9002538	BBraver - Rough Rider Handrim, 25 in, Orange, Short (Pair) (RO-S-OB-25)	1
8	9002539	BBraver - Rough Rider Handrim, 25 in, Orange, Long (Pair) (RO-L-OB-25)	1
9	9002540	BBraver - Rough Rider Handrim, 24 in, Black, Short (Pair) (RB-S-BB-24)	1
10	9002541	BBraver - Rough Rider Handrim, 24 in, Black, Long (Pair) (RB-L-BB-24)	1
11	9002542	BBraver - Rough Rider Handrim, 25 in, Black, Short (Pair) (RB-S-BB-25)	1
12	9002543	BBraver - Rough Rider Handrim, 25 in, Black, Long (Pair) (RB-L-BB-25)	1
13	9002544	BBraver - Rough Rider Handrim, 26 in, Black, Short (Pair) (RB-S-BB-26)	1
14	9002545	BBraver - Rough Rider Handrim, 26 in, Black, Long (Pair) (RB-L-BB-26)	1

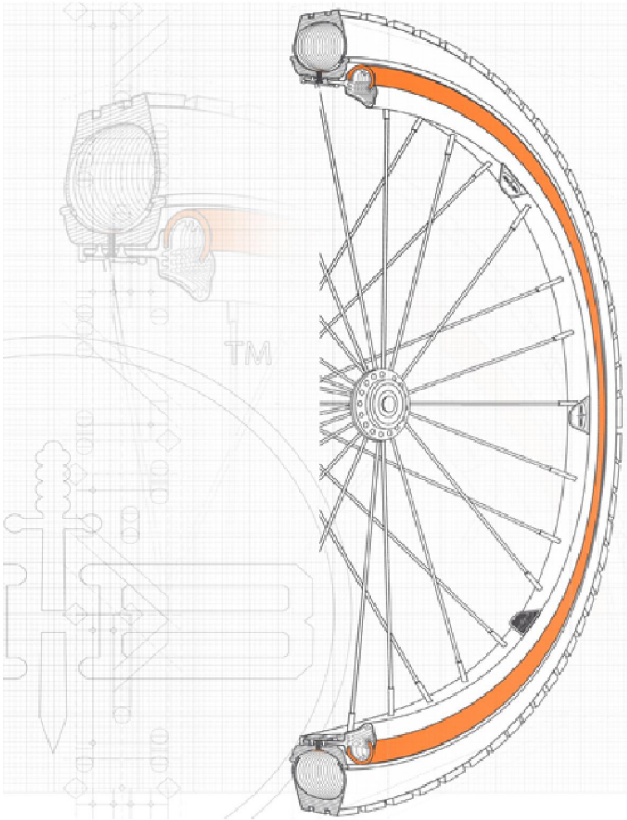

MAKE SURE TO HAVE YOUR SERIAL NUMBER NEARBY WHEN ORDERING PARTS FOR YOUR MOTION COMPOSITES WHEELCHAIR

Rear Wheels Catalogue
Handrim Hardwares

ITEM NO.	PARTNO	DESCRIPTION	QTY.
1	9001006	Handrim - Installation Hardware for Mag 20 in	1
2	9001558	Handrim - Installation Hardware for Mag 22 & 24 in	1
3	9001559	Handrim - Installation Hardware For Newton One	1
4	9001560	Handrim - Installation Hardware For Newton Gravity, Spinergy LX, Spinergy SPOX	1

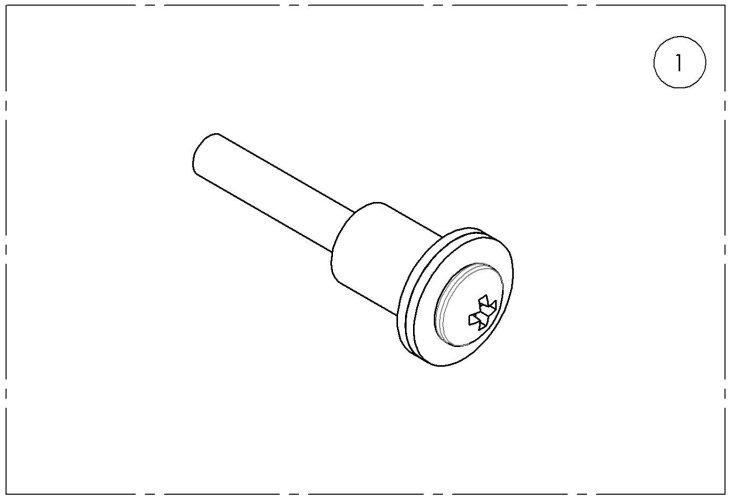

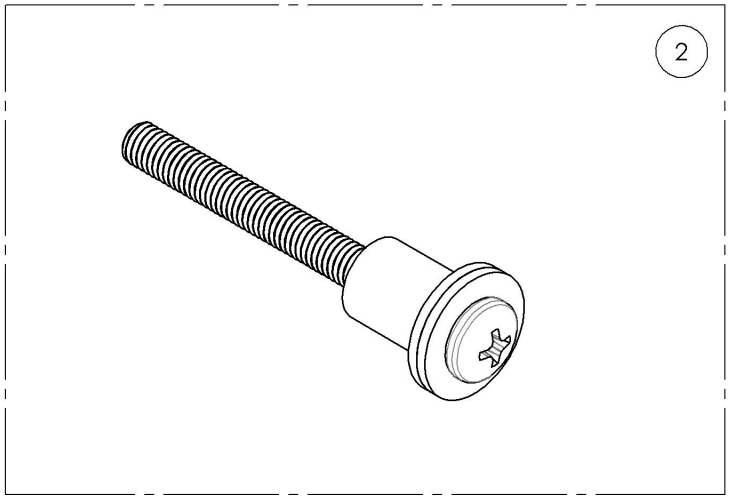

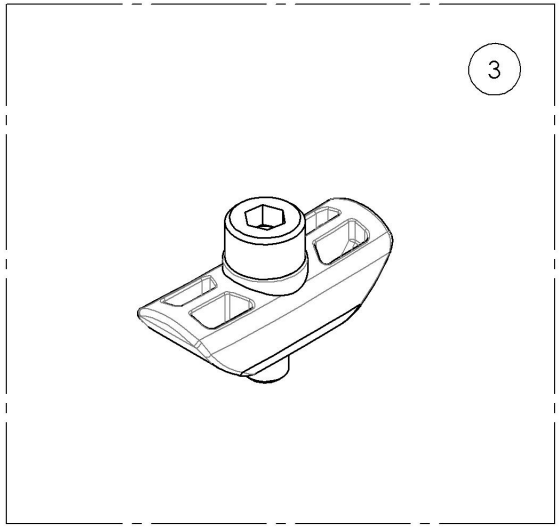

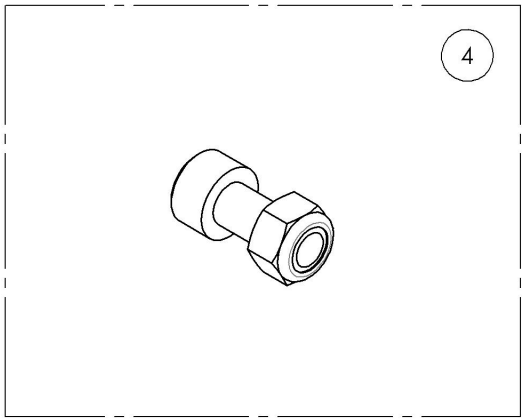

MAKE SURE TO HAVE YOUR SERIAL NUMBER NEARBY WHEN ORDERING PARTS FOR YOUR MOTION COMPOSITES WHEELCHAIR

9001006
Handrim - Installation Hardware for Mag 20 in

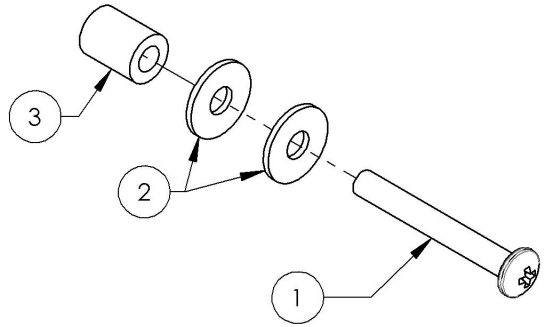

ITEM NO.	PARTNO	DESCRIPTION	QTY.
1	99013	SCREW PHILLIPS PAN HD #10_32 X 1_1_2 + BLUE THREADLOCKER	6
2	99564	FLAT WASHER M5 POUR HANDRIM MAG	12
3	99601	SPACER HANDRIM MAG (last: 200 + 200 comm)	6

9001558
Handrim - Installation Hardware for Mag 22 & 24 in

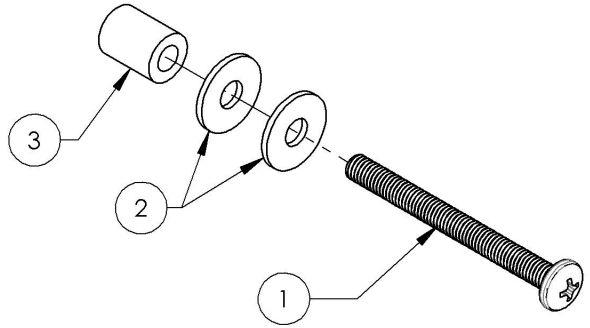

ITEM NO.	PARTNO	DESCRIPTION	QTY.
1	99015	SCREW PHILLIPS #10-32 X 2" HANDRIM MAG + BLUE THREADLOCKER	4
2	99564	FLAT WASHER M5 POUR HANDRIM MAG	8
3	99601	SPACER HANDRIM MAG (last: 200 + 200 comm)	4

9001559
Handrim - Installation Hardware For Newton One

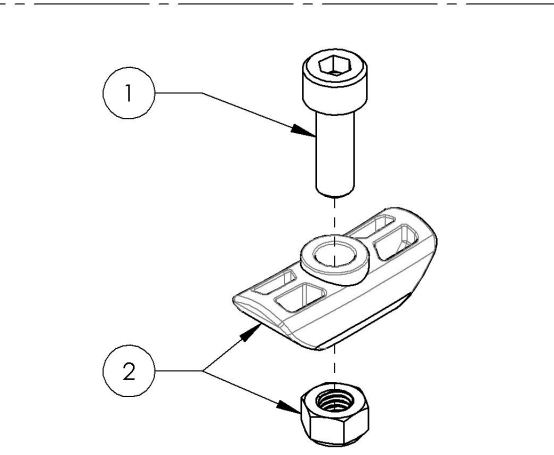

ITEM NO.	PARTNO	DESCRIPTION	QTY.
1	90746	SOCKET CAP SCREW M5X0.8 X 15mm LONG, FULLY THREADED + BLUE TREADLOCKER - BLACK ZINC	6
2	21500	REAR WHEEL LOCKNUT INSERT - ASSEMBLY	6

9001560
Handrim - Installation Hardware For Newton Gravity, Spinergy LX, Spinergy SPOX

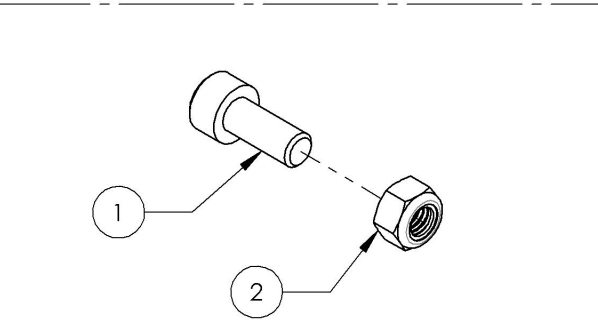

ITEM NO.	PARTNO	DESCRIPTION	QTY.
1	90744	SOCKET CAP SCREW M5X0.8 X 12mm LONG, FULLY THREADED + BLUE TREADLOCKER - BLACK ZINC	6
2	90989	M5 LOW NYLON LOCK	6

MAKE SURE TO HAVE YOUR SERIAL NUMBER NEARBY WHEN ORDERING PARTS FOR YOUR MOTION COMPOSITES WHEELCHAIR

Rear Wheels Catalogue
Flat Free Inserts for Pneumatics 1 3/8 in

ITEM NO.	PARTNO	DESCRIPTION	QTY
1	**9002409**	**Rear Wheel - Flat Free Insert, Pneumatic Tires 1 3/8 in, 22 in**	**1**
	21371	FLAT FREE INSERT 22 x 1-3_8 in	1
	21316	PNEUMATIC TIRE 22x1-3/8in	1
2	**9002410**	**Rear Wheel - Flat Free Insert, Pneumatic Tires 1 3/8 in, 24 in**	**1**
	21372	FLAT FREE INSERT 24 x 1-3_8 in	1
	21317	PNEUMATIC TIRE 24x1-3/8in	1

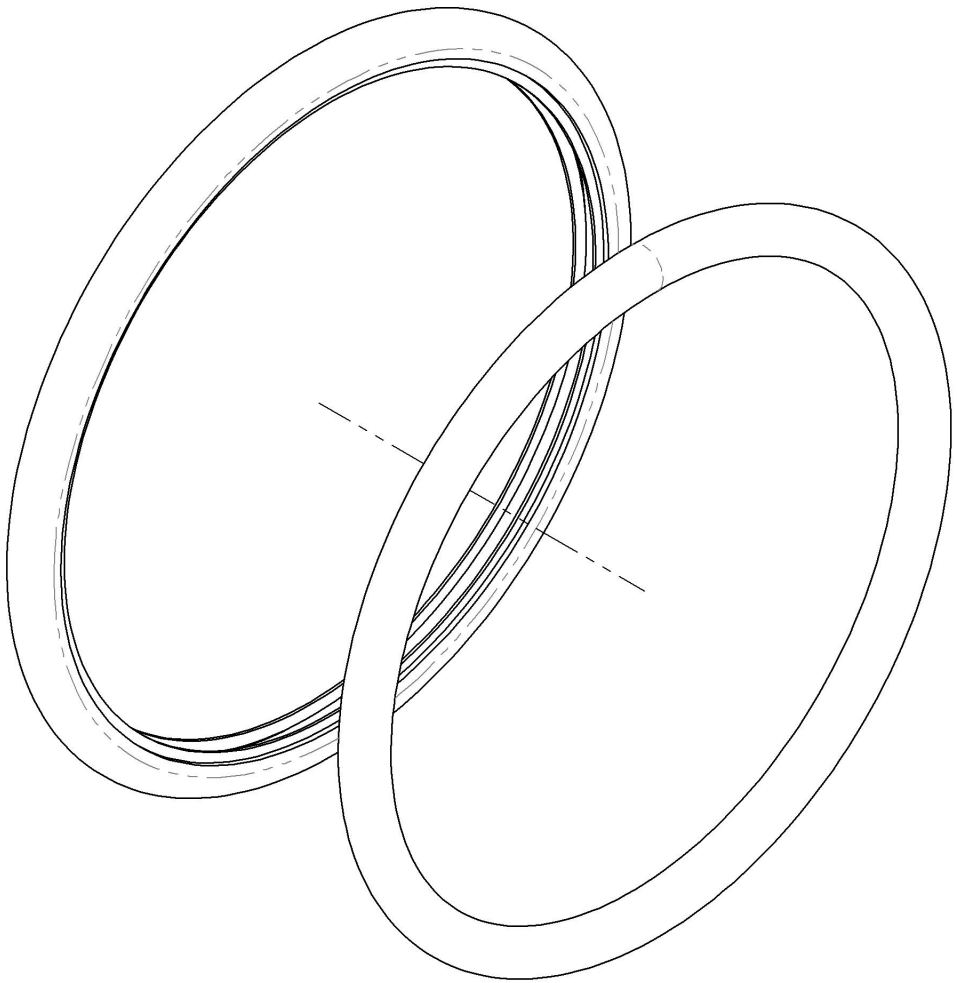

MAKE SURE TO HAVE YOUR SERIAL NUMBER NEARBY WHEN ORDERING PARTS FOR YOUR MOTION COMPOSITES WHEELCHAIR

Rear Wheels Catalogue
Spoke Guards

ITEM NO.	PARTNO	DESCRIPTION	QTY.
1	9001629	Spoke Guard - 20 in	1
2	9001630	Spoke Guard - 22 in	1
3	9001631	Spoke Guard - 24 in	1
4	9001632	Spoke Guard - 26 in	1

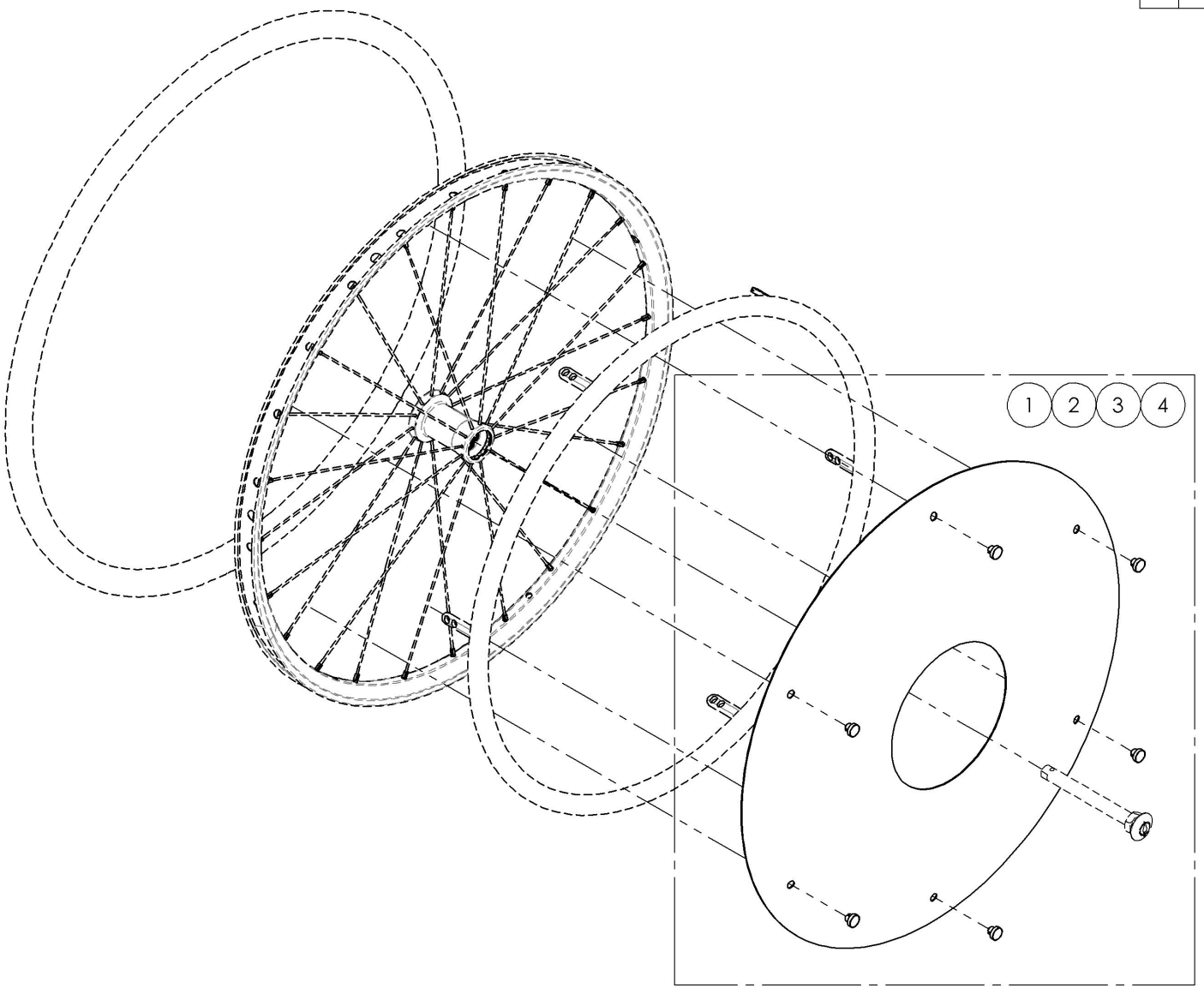

MAKE SURE TO HAVE YOUR SERIAL NUMBER NEARBY WHEN ORDERING PARTS FOR YOUR MOTION COMPOSITES WHEELCHAIR

9001629_9001632
Spoke Guards

ITEM NO.	PARTNO	DESCRIPTION	9001629 /QTY.	9001630 /QTY.	9001631 /QTY.	9001632 /QTY.
1	51019	SPOKE GUARD 20in	1	-	-	-
2	51020	SPOKE GUARD 22in	-	1	-	-
3	51021	SPOKE GUARD 24in	-	-	1	-
4	51025	SPOKE GUARD 26in	-	-	-	1
5	51034	SPOKE SHIELD CLIP	6	6	6	6
6	51033	SPOKE SHIELD CLIP WASHER	-	-	6	-

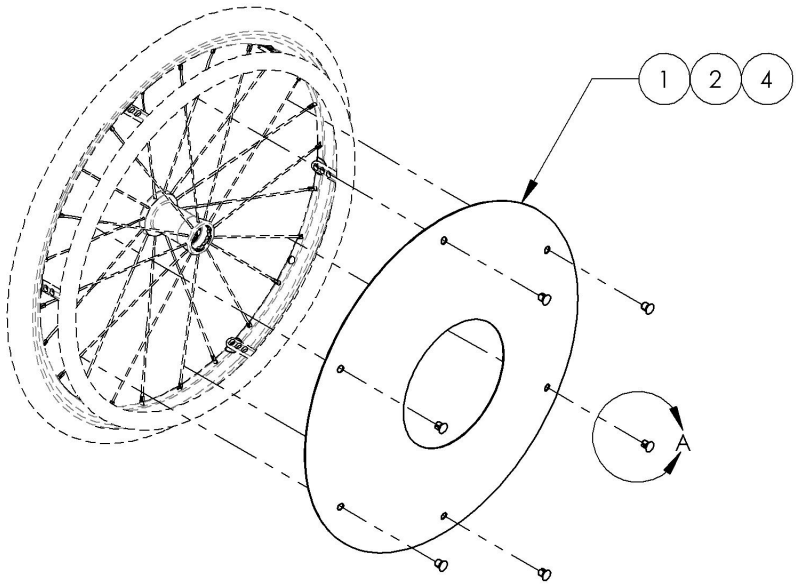

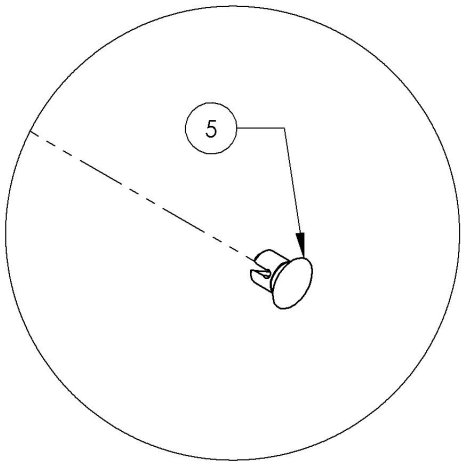

DETAIL A
SCALE 5 : 8

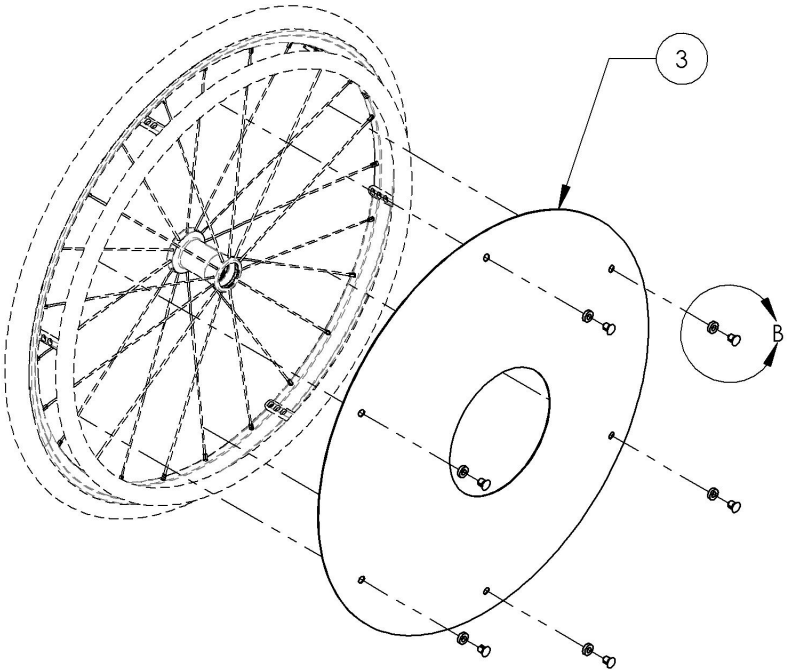

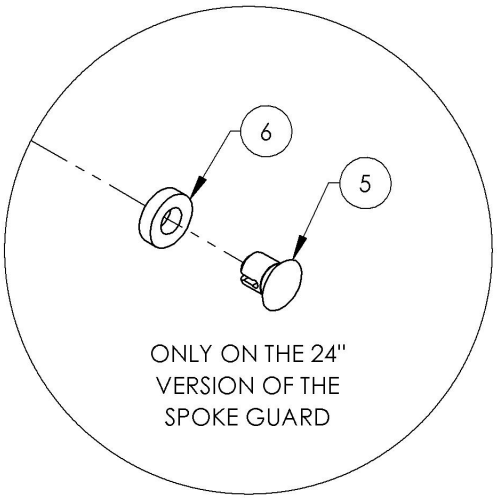

DETAIL B
SCALE 5 : 8

MAKE SURE TO HAVE YOUR SERIAL NUMBER NEARBY WHEN ORDERING PARTS FOR YOUR MOTION COMPOSITES WHEELCHAIR

Rear Wheels Catalogue
Rear Wheels + Tires

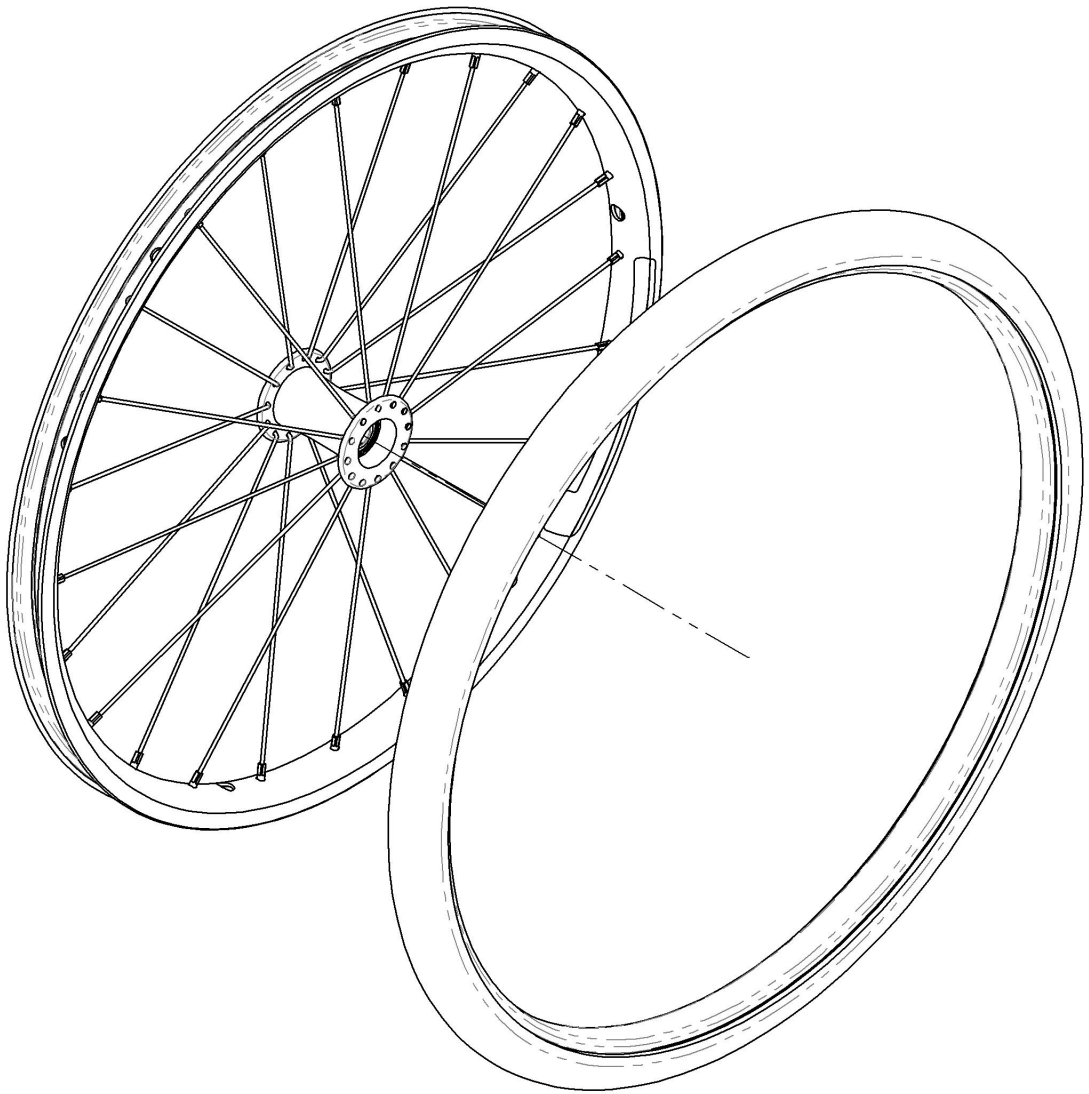

ITEM NO.	PARTNO	DESCRIPTION	QTY
1	9002499	Rear Wheel - Newton One + Soft Urethane Tire 20 in	1
2	9002500	Rear Wheel - Newton One + Soft Urethane Tire 22 in	1
3	9002501	Rear Wheel - Newton One + Soft Urethane Tire 24 in	1
4	9002502	Rear Wheel - Newton Gravity + Soft Urethane Tire 20 in	1
5	9002503	Rear Wheel - Newton Gravity + Soft Urethane Tire 22 in	1
6	9002504	Rear Wheel - Newton Gravity + Soft Urethane Tire 24 in	1
7	9002497	Rear Wheel - Newton One + HP, 20 in	1
8	9002505	Rear Wheel - Newton One + HP, 22 in	1
9	9002506	Rear Wheel - Newton One + HP, 24 in	1
10	9002507	Rear Wheel - Newton Gravity + HP, 20 in	1
11	9002508	Rear Wheel - Newton Gravity + HP, 22 in	1
12	9002509	Rear Wheel - Newton Gravity + HP, 24 in	1
13	9002519	Rear Wheel - Newton Gravity + HP, 25 in	1
14	9002510	Rear Wheel - Newton Gravity + HP, 26 in	1
15	9002498	Rear Wheel - Newton One + Standard Pressure, 20 in	1
16	9002511	Rear Wheel - Newton One + Standard Pressure, 22 in	1
17	9002512	Rear Wheel - Newton One + Standard Pressure, 24 in	1
18	9002513	Rear Wheel - Newton Gravity + Standard Pressure, 20 in	1
19	9002514	Rear Wheel - Newton Gravity + Standard Pressure, 22 in	1
20	9002515	Rear Wheel - Newton Gravity + Standard Pressure, 24 in	1
21	9002520	Rear Wheel - Newton Gravity + Standard Pressure, 25 in	1
22	9002516	Rear Wheel - Newton Gravity + Standard Pressure, 26 in	1

BEARING REPLACEMENT

FOR ALL REAR WHEELS

Part#: **22011**

MAKE SURE TO HAVE YOUR SERIAL NUMBER NEARBY WHEN ORDERING PARTS FOR YOUR MOTION COMPOSITES WHEELCHAIR

9002499_9002504
Rear Wheel + Soft Urethane Tire

ITEM NO.	PARTNO	DESCRIPTION	9002499 /QTY.	9002500 /QTY.	9002501 /QTY.	9002502 /QTY.	9002503 /QTY.	9002504 /QTY.
1	21118	20 in NEWTON ONE WHEEL	1	-	-	-	-	-
2	21110	22 in NEWTON ONE WHEEL	-	1	-	-	-	-
3	21111	24 in NEWTON ONE WHEEL	-	-	1	-	-	-
4	21113	20" NEWTON GRAVITY WHEEL	-	-	-	1	-	-
5	21114	22" NEWTON GRAVITY WHEEL	-	-	-	-	1	-
6	21115	24" NEWTON GRAVITY WHEEL	-	-	-	-	-	1
7	21365	20" URETHANE TIRE	1	-	-	1	-	-
8	21366	22" URETHANE TIRE	-	1	-	-	1	-
9	21367	24" URETHANE TIRE	-	-	1	-	-	1

NEWTON ONE
9002499, 9002500 & 9002501

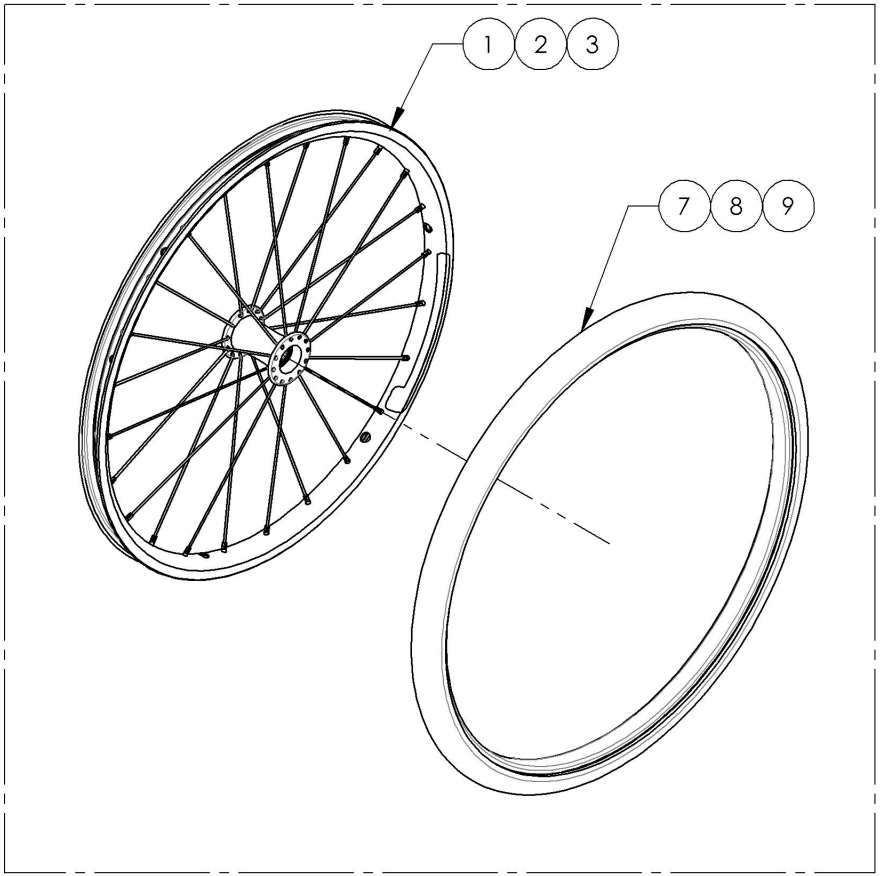

NEWTON GRAVITY
9002502, 9002503 & 9002504

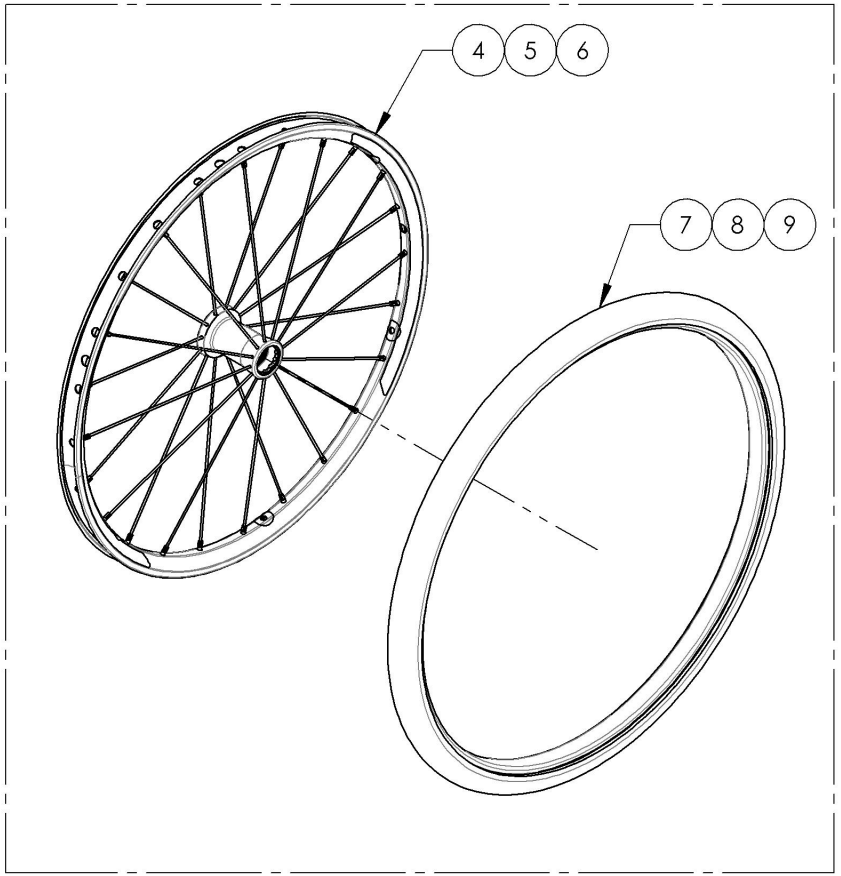

MAKE SURE TO HAVE YOUR SERIAL NUMBER NEARBY WHEN ORDERING PARTS FOR YOUR MOTION COMPOSITES WHEELCHAIR

9002497 & 9002505_9002510 & 9002519
Rear Wheel + HP Tire

ITEM NO.	PARTNO	DESCRIPTION	9002497 /QTY.	9002505 /QTY.	9002506 /QTY.	9002507 /QTY.	9002508 /QTY.	9002509 /QTY.	9002519 /QTY.	9002510 /QTY.
1	21118	20 in NEWTON ONE WHEEL	1	-	-	-	-	-	-	-
2	21110	22 in NEWTON ONE WHEEL	-	1	-	-	-	-	-	-
3	21111	24 in NEWTON ONE WHEEL	-	-	1	-	-	-	-	-
4	21113	20" NEWTON GRAVITY WHEEL	-	-	-	1	-	-	-	-
5	21114	22" NEWTON GRAVITY WHEEL	-	-	-	-	1	-	-	-
6	21115	24" NEWTON GRAVITY WHEEL	-	-	-	-	-	1	-	-
7	21116	25" NEWTON GRAVITY WHEEL	-	-	-	-	-	-	1	-
8	21117	26" NEWTON GRAVITY WHEEL	-	-	-	-	-	-	-	1
9	21305	IRONCAP/RIGHTRUN 1" HP TIRE 20"	1	-	-	1	-	-	-	-
10	21306	IRONCAP/RIGHTRUN 1" HP TIRE 22"	-	1	-	-	1	-	-	-
11	21307	IRONCAP/RIGHTRUN 1" HP TIRE 24"	-	-	1	-	-	1	-	-
12	21308	IRONCAP/RIGHTRUN 1" HP TIRE 25"	-	-	-	-	-	-	1	-
13	21309	IRONCAP/RIGHTRUN 1" HP TIRE 26"	-	-	-	-	-	-	-	1

NEWTON ONE
9002497, 9002505 & 9002506

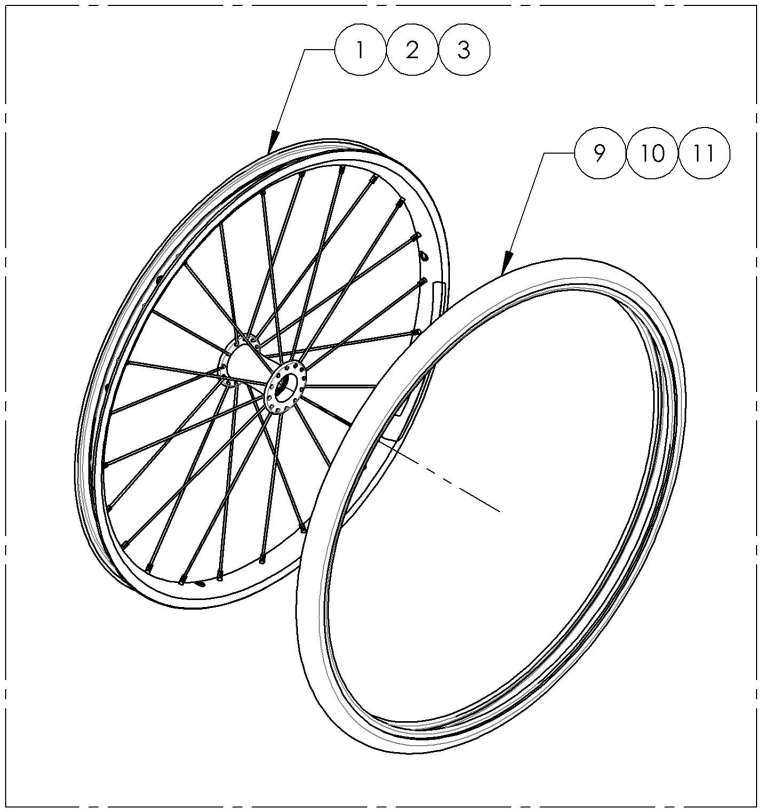

NEWTON GRAVITY
9002507, 9002508, 9002509 & 9002510

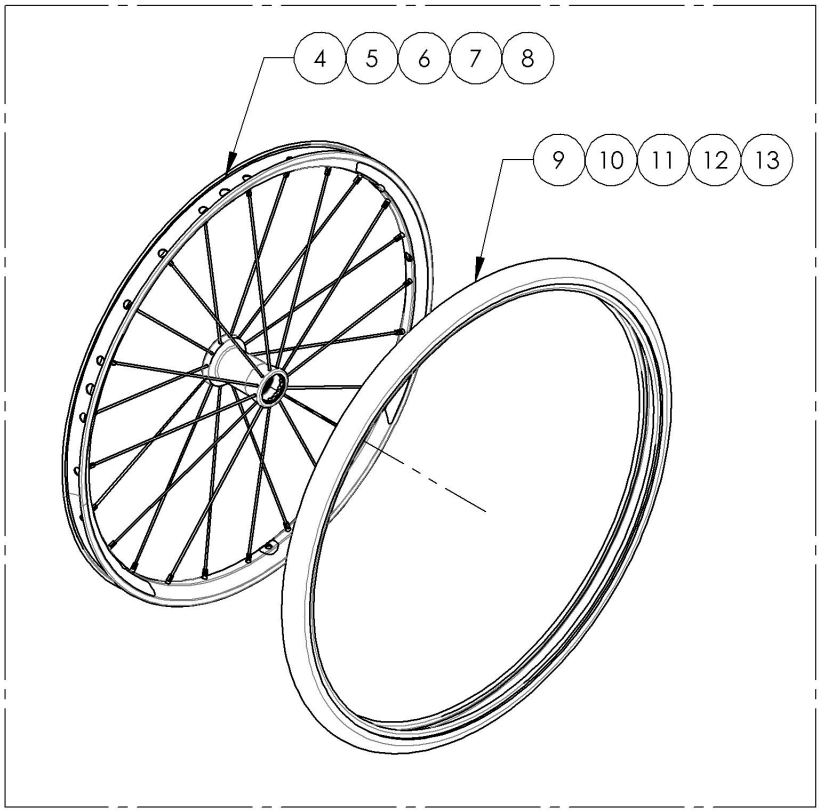

MAKE SURE TO HAVE YOUR SERIAL NUMBER NEARBY WHEN ORDERING PARTS FOR YOUR MOTION COMPOSITES WHEELCHAIR

9002498 & 9002511_9002516 & 9002520
Rear Wheel + Standard Pressure Tire

ITEM NO.	PARTNO	DESCRIPTION	9002498 /QTY.	9002511 /QTY.	9002512 /QTY.	9002513 /QTY.	9002514 /QTY.	9002515 /QTY.	9002520 /QTY.	9002516 /QTY.
1	21118	20 in NEWTON ONE WHEEL	1	-	-	-	-	-	-	-
2	21110	22 in NEWTON ONE WHEEL	-	1	-	-	-	-	-	-
3	21111	24 in NEWTON ONE WHEEL	-	-	1	-	-	-	-	-
4	21113	20" NEWTON GRAVITY WHEEL	-	-	-	1	-	-	-	-
5	21114	22" NEWTON GRAVITY WHEEL	-	-	-	-	1	-	-	-
6	21115	24" NEWTON GRAVITY WHEEL	-	-	-	-	-	1	-	-
7	21116	25" NEWTON GRAVITY WHEEL	-	-	-	-	-	-	1	-
8	21117	26" NEWTON GRAVITY WHEEL	-	-	-	-	-	-	-	1
9	21315	20"x1⅜" PNEUMATIC TIRE	1	-	-	1	-	-	-	-
10	21316	22"x1⅜" PNEUMATIC TIRE	-	1	-	-	1	-	-	-
11	21317	24"x1⅜" PNEUMATIC TIRE	-	-	1	-	-	1	-	-
12	21318	25"x1⅜" PNEUMATIC TIRE	-	-	-	-	-	-	1	-
13	21319	26"x1⅜" PNEUMATIC TIRE	-	-	-	-	-	-	-	1

NEWTON ONE
9002498, 9002511 & 9002512

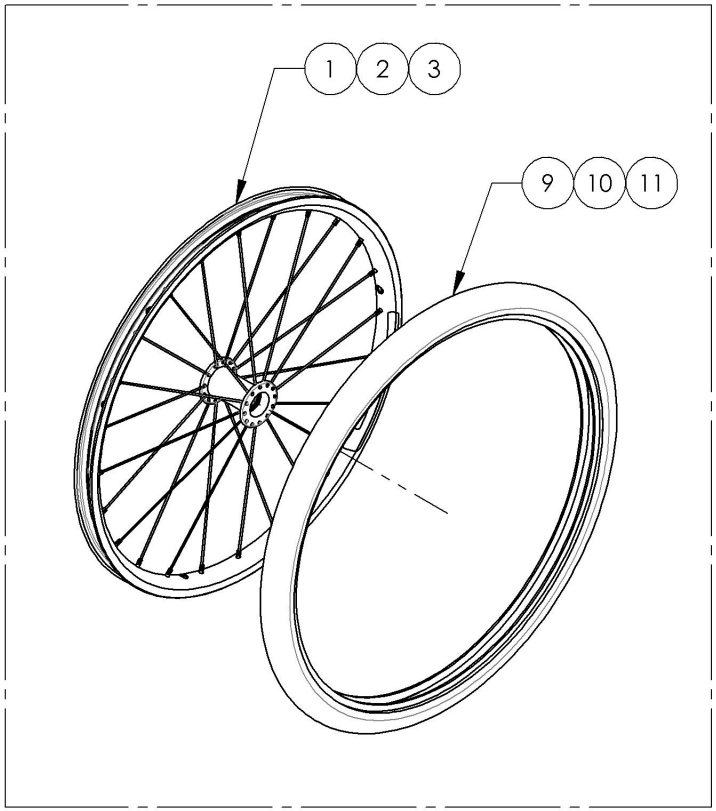

NEWTON GRAVITY
9002513, 9002514, 9002515, 9002520 & 9002516

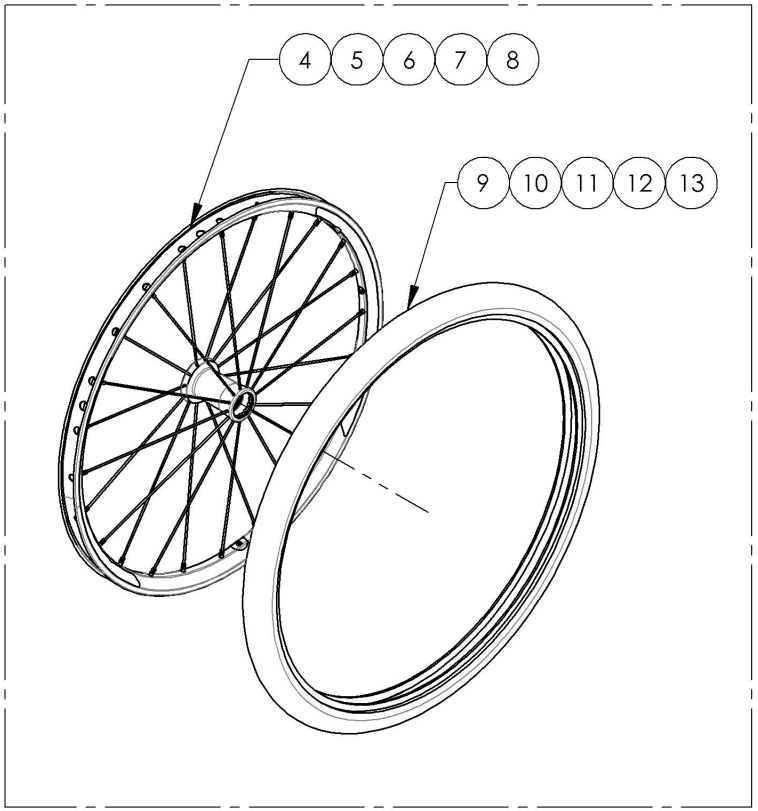

MAKE SURE TO HAVE YOUR SERIAL NUMBER NEARBY WHEN ORDERING PARTS FOR YOUR MOTION COMPOSITES WHEELCHAIR

Rear Wheels Catalogue
Quick Release & Permanent Axles

ITEM NO.	PARTNO	DESCRIPTION	QTY.
1	9001561	Wheel Axle - Quick Release	1
2	9001563	Wheel Axle - Quad Release	1
3	9001562	Wheel Axle - Permanent for Mag Wheels	1
4	9002956	Wheel Axle - Permanent	1
5	9002896	Wheel Axle - Quick Release, for Spinergy Spox & LX Wheels	1
6	9002897	Wheel Axle - Quad Release, for Spinergy Spox & LX Wheels	1

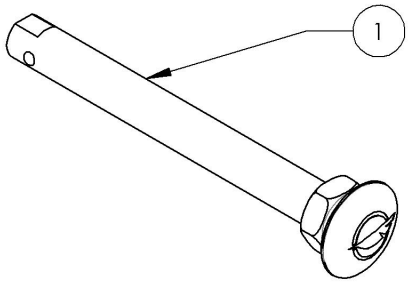

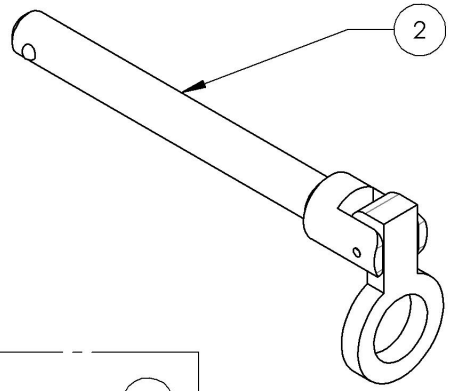

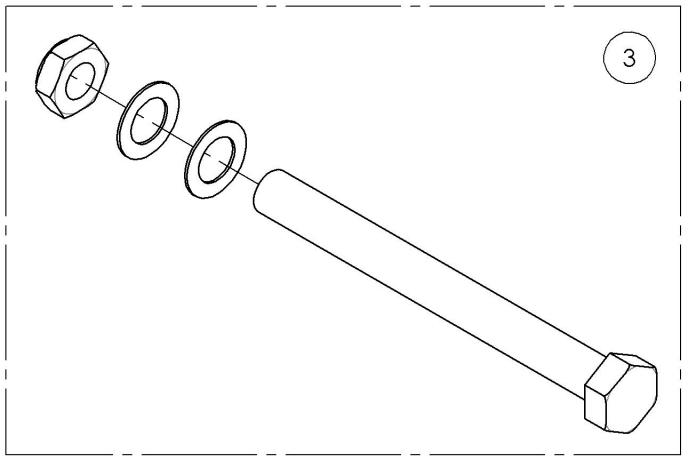

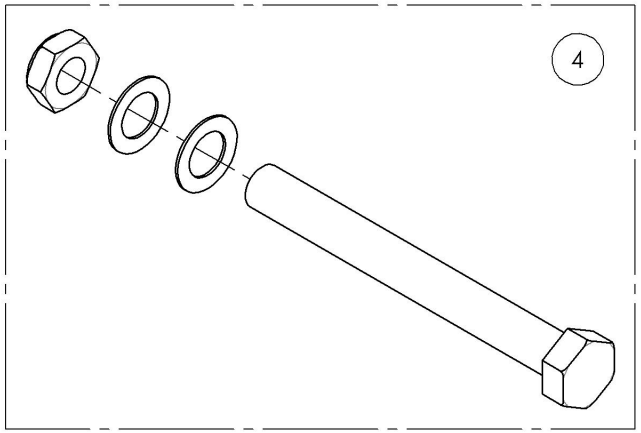

FOR SPINERGY SPOX & LX WHEELS ONLY

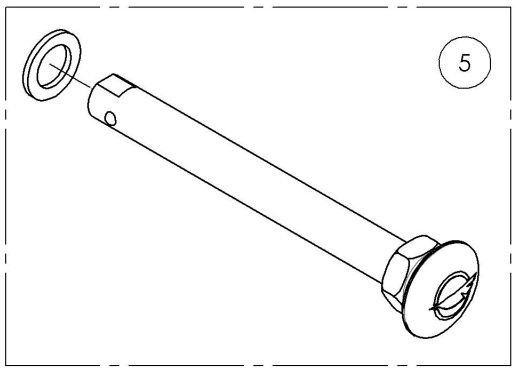

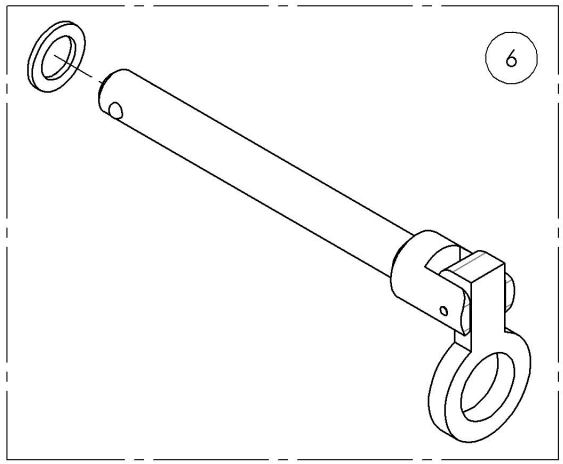

MAKE SURE TO HAVE YOUR SERIAL NUMBER NEARBY WHEN ORDERING PARTS FOR YOUR MOTION COMPOSITES WHEELCHAIR

9001561_9001563 & 9002956
Wheel Axles

9001561 - Wheel Axle - Quick Release

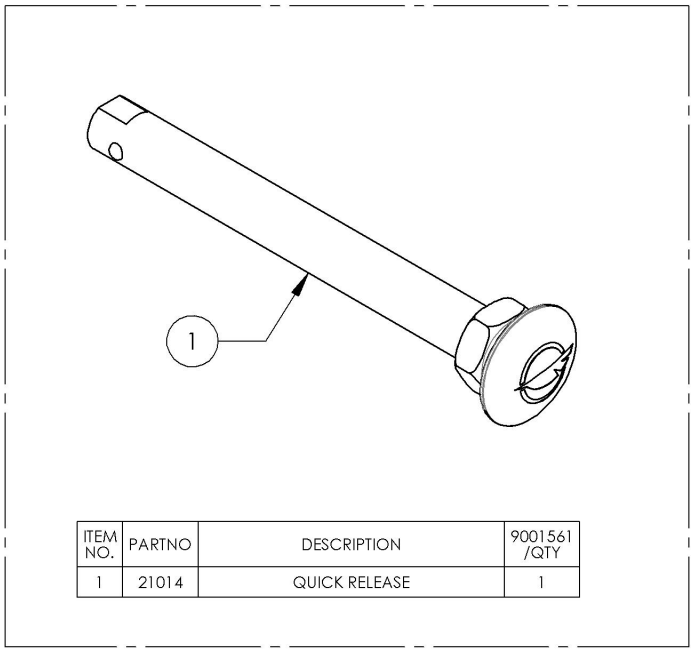

ITEM NO.	PARTNO	DESCRIPTION	9001561 /QTY
1	21014	QUICK RELEASE	1

9001562 - Wheel Axle - Permanent for Mag Wheels

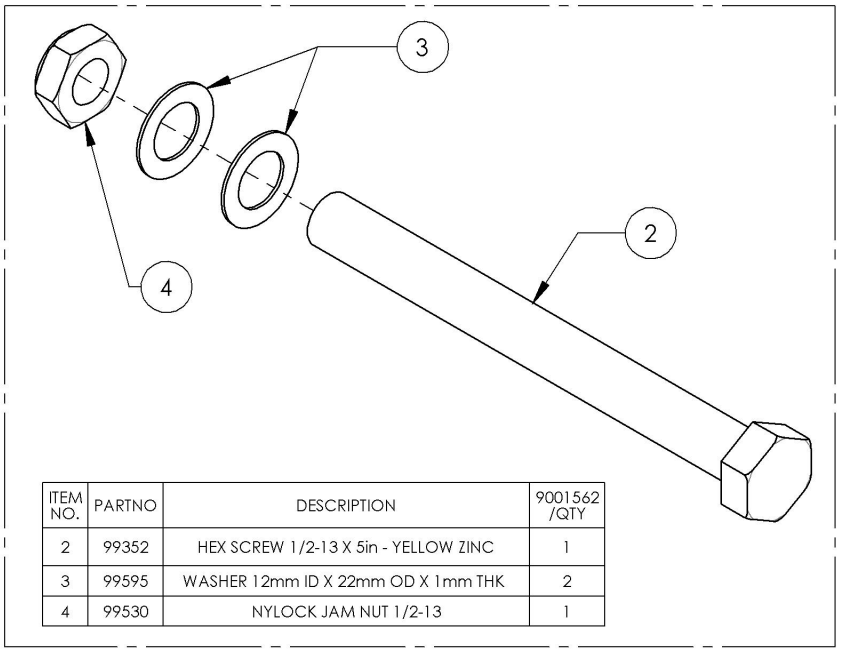

ITEM NO.	PARTNO	DESCRIPTION	9001562 /QTY
2	99352	HEX SCREW 1/2-13 X 5in - YELLOW ZINC	1
3	99595	WASHER 12mm ID X 22mm OD X 1mm THK	2
4	99530	NYLOCK JAM NUT 1/2-13	1

9001563 - Wheel Axle - Quad Release

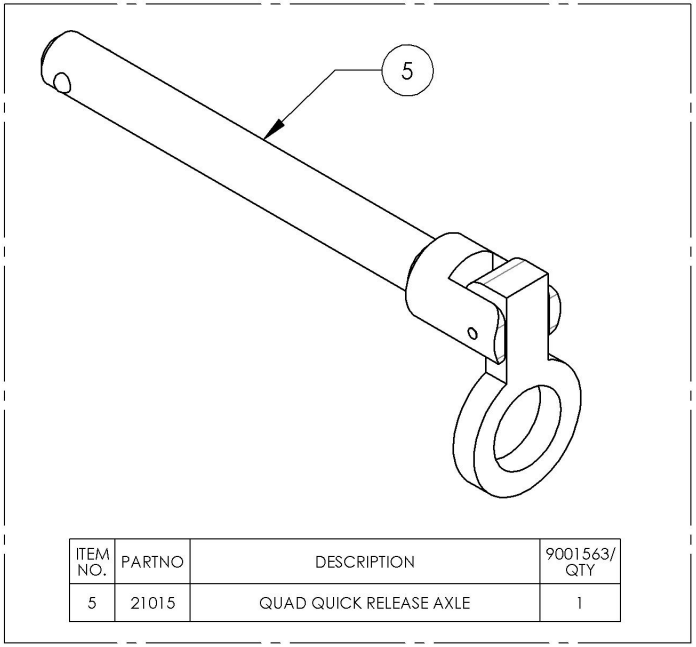

ITEM NO.	PARTNO	DESCRIPTION	9001563/ QTY
5	21015	QUAD QUICK RELEASE AXLE	1

9002956 - Wheel Axle - Permanent

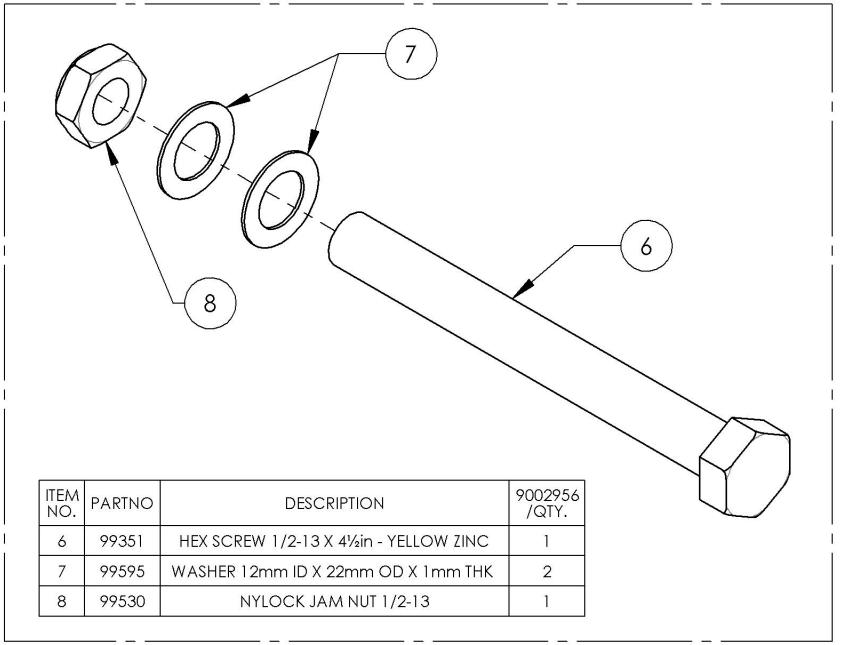

ITEM NO.	PARTNO	DESCRIPTION	9002956 /QTY.
6	99351	HEX SCREW 1/2-13 X 4½in - YELLOW ZINC	1
7	99595	WASHER 12mm ID X 22mm OD X 1mm THK	2
8	99530	NYLOCK JAM NUT 1/2-13	1

MAKE SURE TO HAVE YOUR SERIAL NUMBER NEARBY WHEN ORDERING PARTS FOR YOUR MOTION COMPOSITES WHEELCHAIR

9002896 - Wheel Axle - Quick Release, for Spinergy Spox & LX Wheels

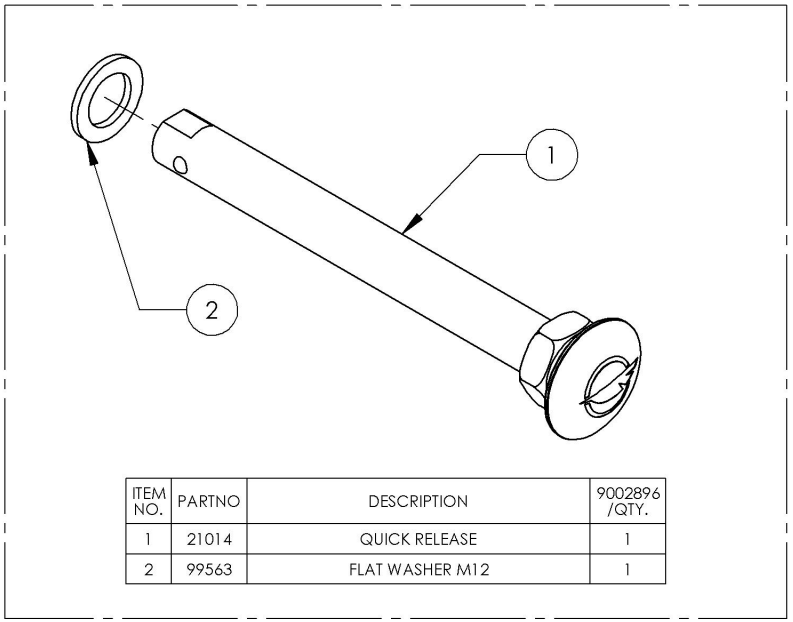

ITEM NO.	PARTNO	DESCRIPTION	9002896 /QTY.
1	21014	QUICK RELEASE	1
2	99563	FLAT WASHER M12	1

9002897 - Wheel Axle - Quad Release, for Spinergy Spox & LX Wheels

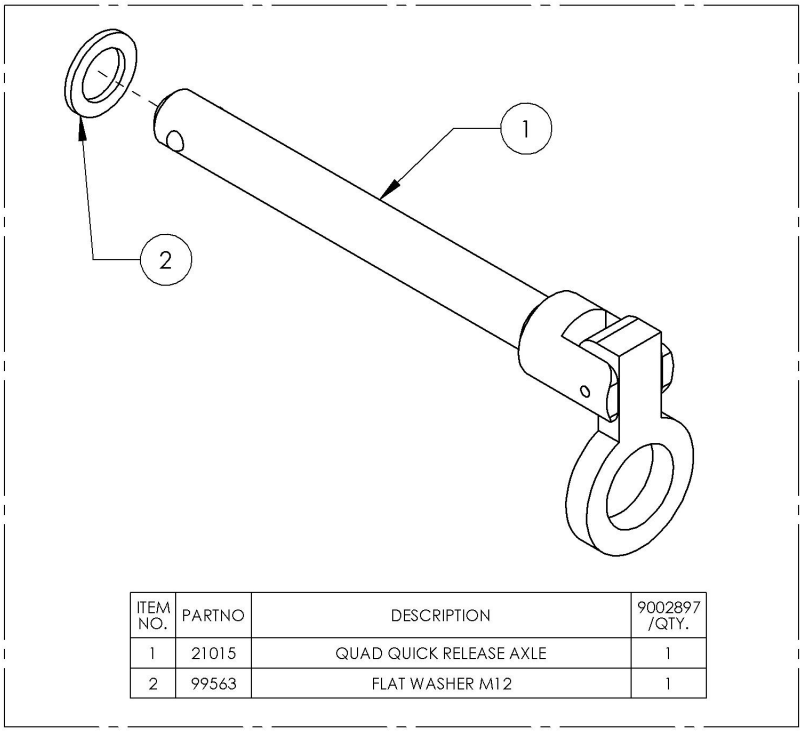

ITEM NO.	PARTNO	DESCRIPTION	9002897 /QTY.
1	21015	QUAD QUICK RELEASE AXLE	1
2	99563	FLAT WASHER M12	1

MAKE SURE TO HAVE YOUR SERIAL NUMBER NEARBY WHEN ORDERING PARTS FOR YOUR MOTION COMPOSITES WHEELCHAIR

ITEM NO.	PARTNO	DESCRIPTION	QTY.
1	9001568	Rear Wheel Mounting Plate - 0° Camber Angle	1
2	9001569	Rear Wheel Mounting Plate - 3° Camber Angle	1
3	9001570	Rear Wheel Mounting Plate - 6° Camber Angle	1
4	9001745	Rear Wheel Mounting Plate V2B - 0° Camber Angle	1
5	9001746	Rear Wheel Mounting Plate V2B - 3° Camber Angle	1
6	9001747	Rear Wheel Mounting Plate V2B - 6° Camber Angle	1

DISCONTINUED

REPLACED BY #9001745 TO #9001747

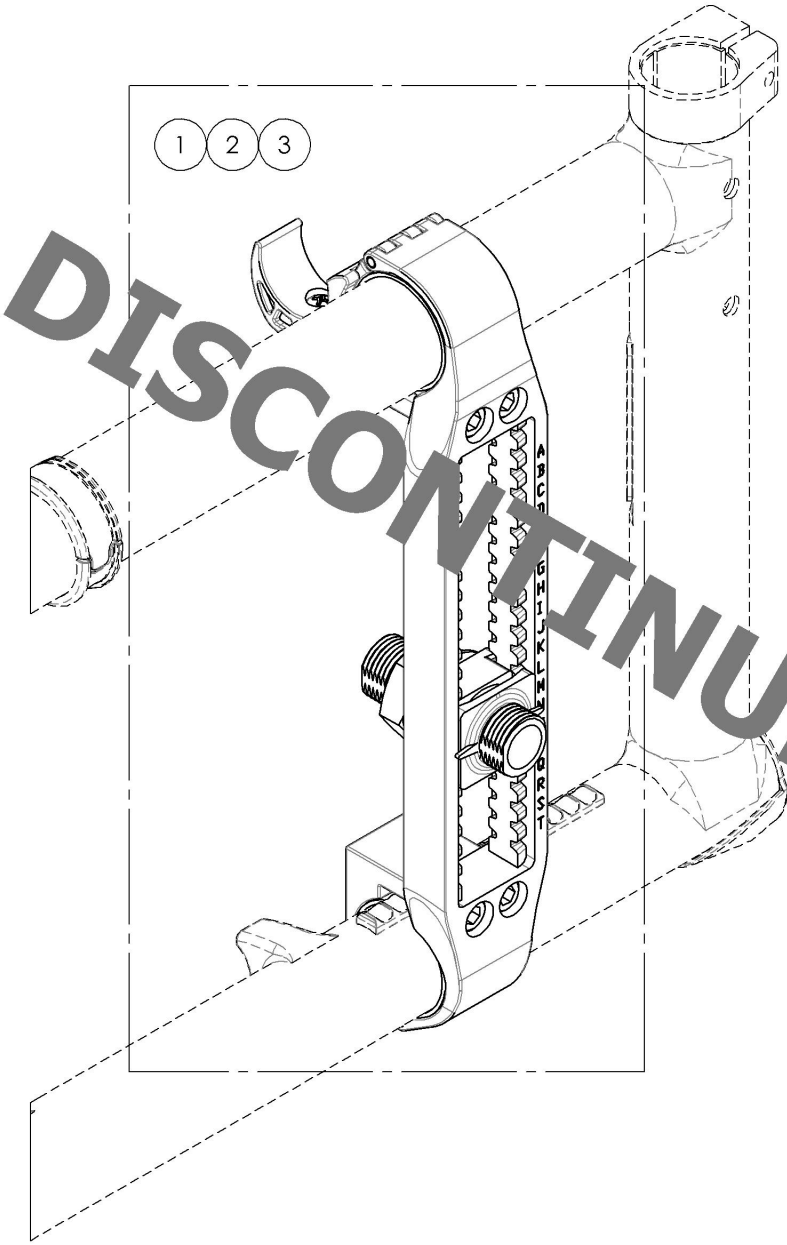

DISCONTINUED

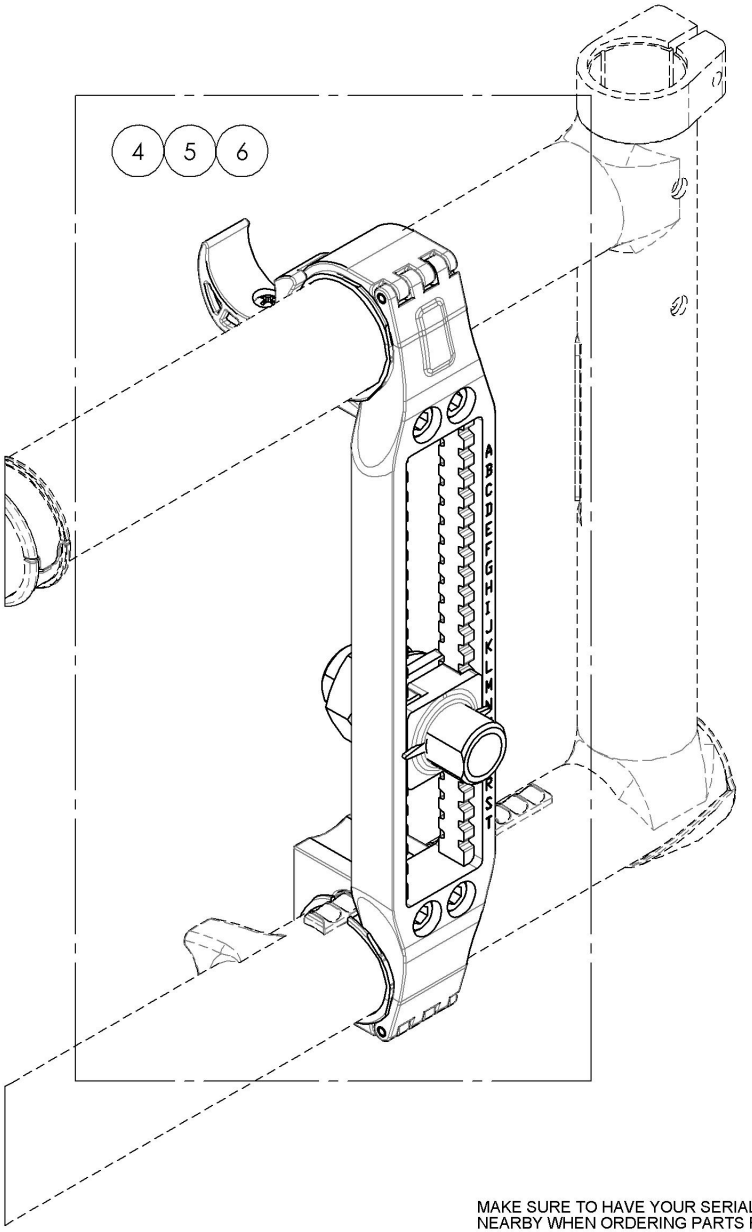

MAKE SURE TO HAVE YOUR SERIAL NUMBER NEARBY WHEN ORDERING PARTS FOR YOUR MOTION COMPOSITES WHEELCHAIR

9001568_9001570
Rear Wheel Mounting Plate

ITEM NO.	PARTNO	DESCRIPTION	9001568 /QTY.	9001569 /QTY.	9001570 /QTY.
1	21506	COMPLETE MOUNTING ASSEMBLED	1	1	1
2	21508	ASSY 0 DEG PLATES	1	1	-
3	21507	ASSY 3DEG PLATES	-	-	1
4	21008	0° BUSHING M18x1.5	1	-	-
5	21009	3° BUSHING M18x1.5	-	1	1
6	99536	NUT M18X1.5	1	1	1
7	99597	LOCK WASHER M18	1	1	1

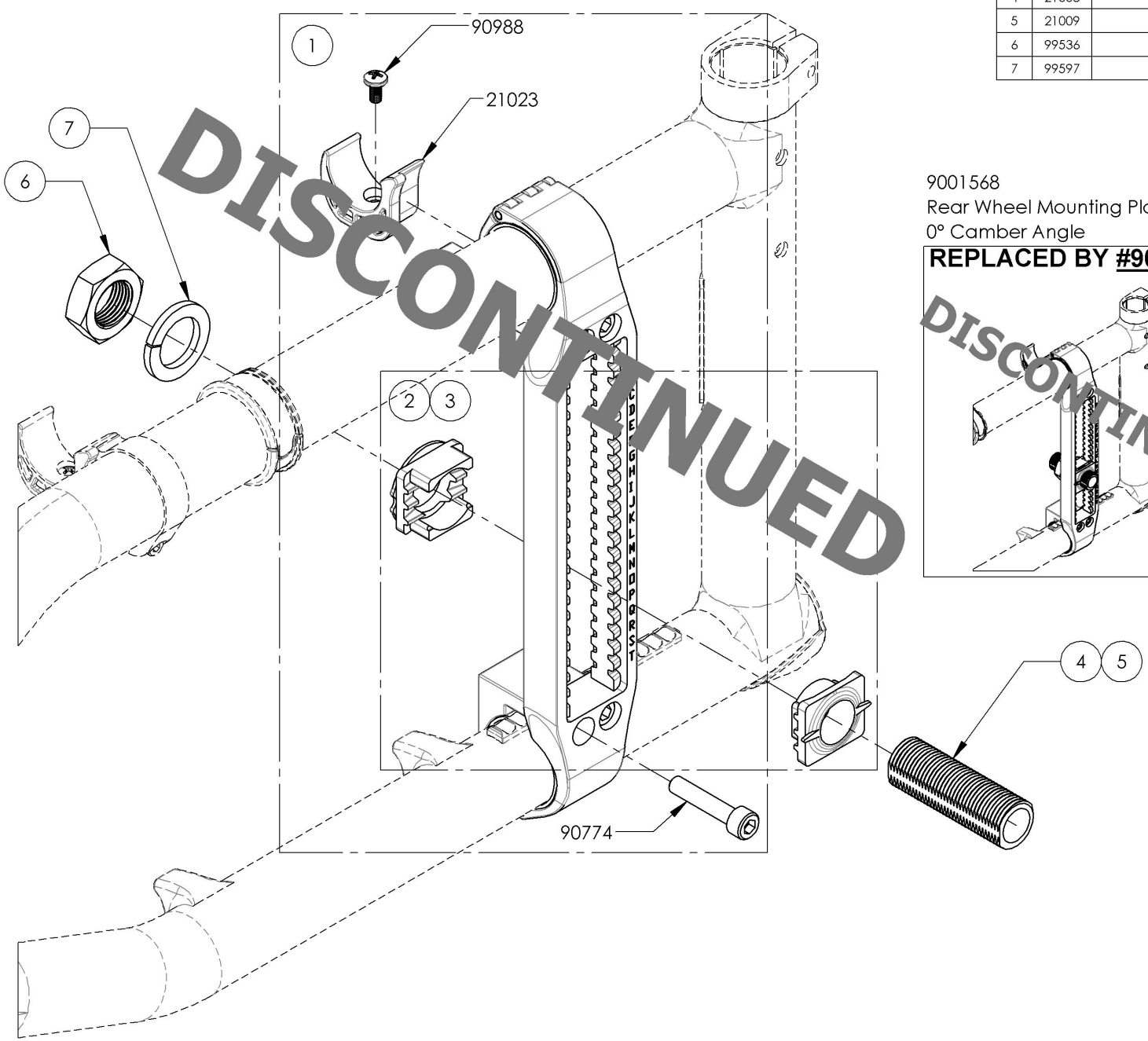

DISCONTINUED

9001568
Rear Wheel Mounting Plate -
0° Camber Angle

REPLACED BY #9001745

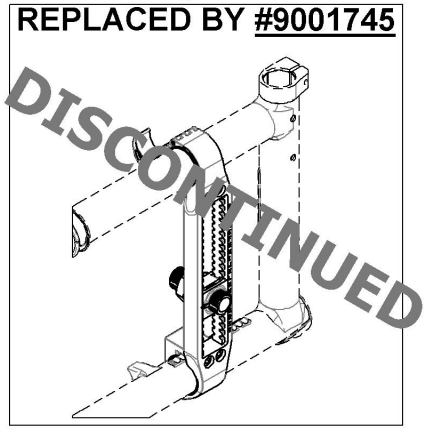

DISCONTINUED

9001569
Rear Wheel Mounting Plate -
3° Camber Angle

REPLACED BY #9001746

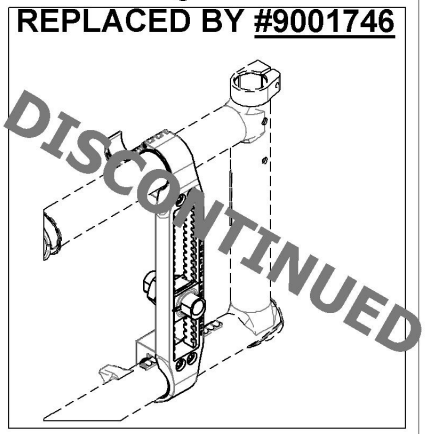

DISCONTINUED

9001570
Rear Wheel Mounting Plate -
6° Camber Angle

REPLACED BY #9001747

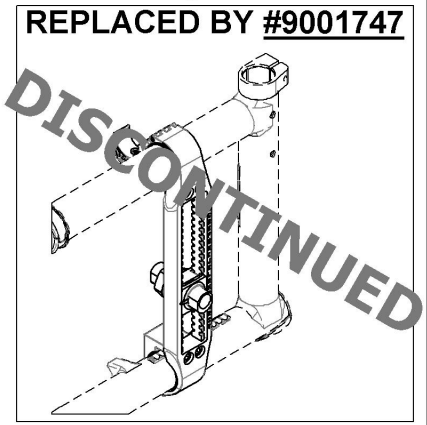

DISCONTINUED

MAKE SURE TO HAVE YOUR SERIAL NUMBER NEARBY WHEN ORDERING PARTS FOR YOUR MOTION COMPOSITES WHEELCHAIR

9001745_9001747
Rear Wheel Mounting Plate V2B

ITEM NO.	PARTNO	DESCRIPTION	9001745 /QTY.	9001746 /QTY.	9001747 /QTY.
1	21511	COMPLETE MOUNTING PLATE ASSEMBLY V2B	1	1	1
2	21514	V2B 0° POSITIONNING NUT AND FACE PLATE ASSEMBLY	1	1	-
3	21513	V2B 3° POSITIONNING NUT AND FACE PLATE ASSEMBLY	-	-	1
4	21041	0° BUSHING M18x1	1	-	-
5	21042	3° BUSHING M18x1	-	1	1
6	91031	JAM NUT M18 x 1.0	1	1	1
7	99597	LOCK WASHER M18	1	1	1

APPLICABLE ON WHEELCHAIRS SINCE 2017/01/16

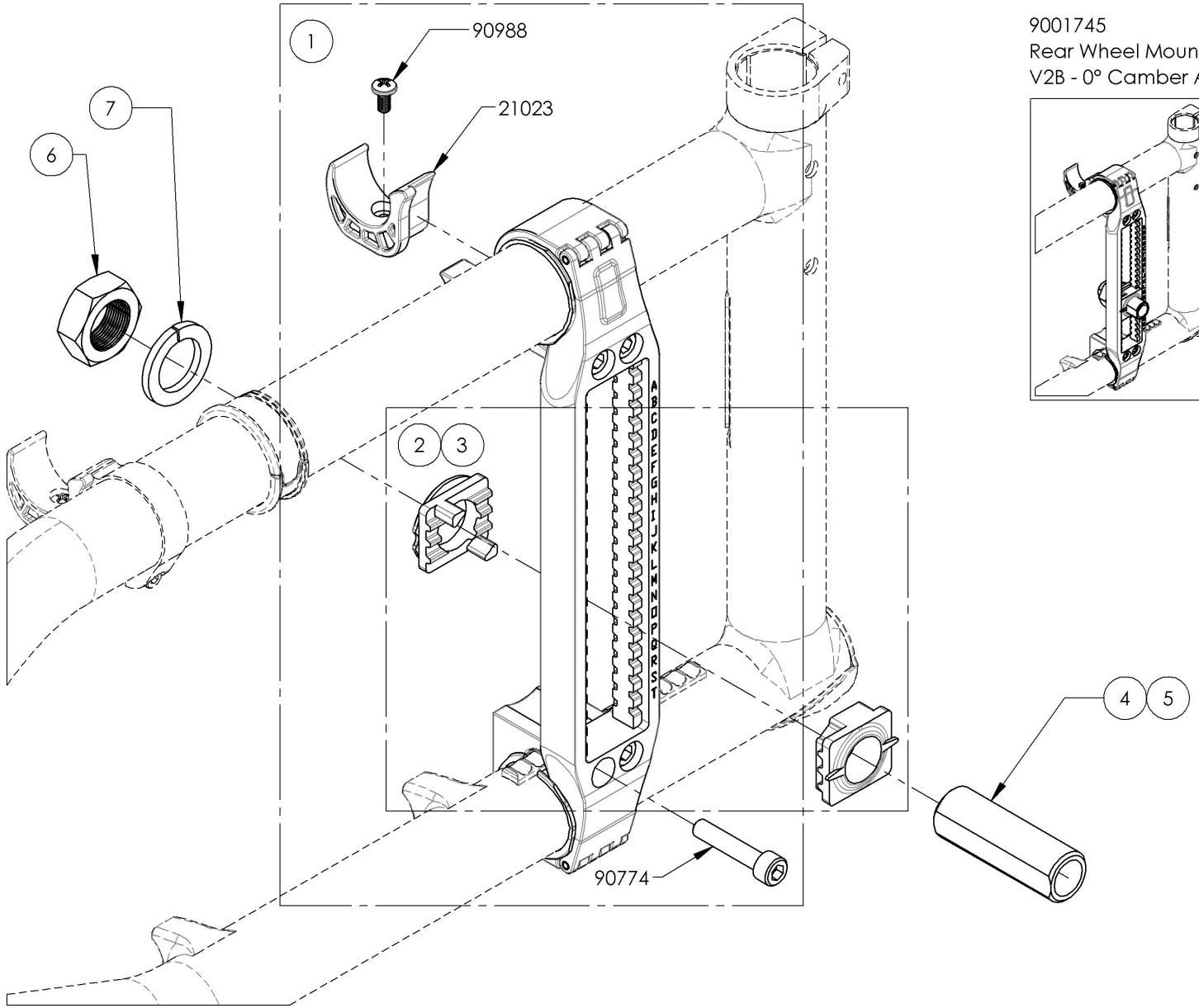

9001745
Rear Wheel Mounting Plate
V2B - 0° Camber Angle

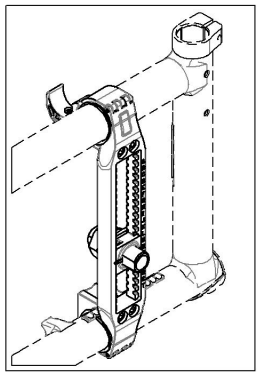

9001746
Rear Wheel Mounting Plate
V2B - 3° Camber Angle

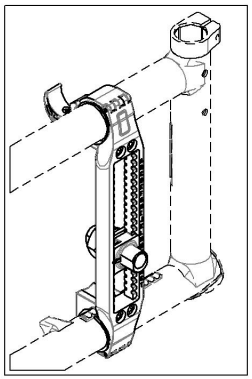

9001747
Rear Wheel Mounting Plate
V2B - 6° Camber Angle

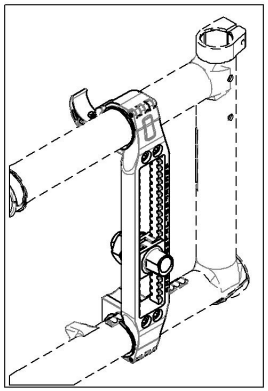

MAKE SURE TO HAVE YOUR SERIAL NUMBER NEARBY WHEN ORDERING PARTS FOR YOUR MOTION COMPOSITES WHEELCHAIR

Rear Wheels Catalogue
Amputee Adjustable Axle Plates for Multi-Position Rear Wheel Mounting Plate

REPLACED BY #9001748 & #9001750

ITEM NO.	PARTNO	DESCRIPTION	QTY
1	9001564	Amputee Axle Plate - Adjustable, Right, 0° Camber	1
2	9001566	Amputee Axle Plate - Adjustable, Left, 0° Camber	1
3	9001565	Amputee Axle Plate - Adjustable, Right, 3° Camber	1
4	9001567	Amputee Axle Plate - Adjustable, Left, 3° Camber	1
5	9001748	Amputee Axle Plate V2B - Adjustable, Right	1
6	9001750	Amputee Axle Plate V2B - Adjustable, Left	1
7	9002444	Rear Wheel - 0° Axle Bushing + Hardware	1
8	9002445	Rear Wheel - 3° Axle Bushing + Hardware	1

DISCONTINUED

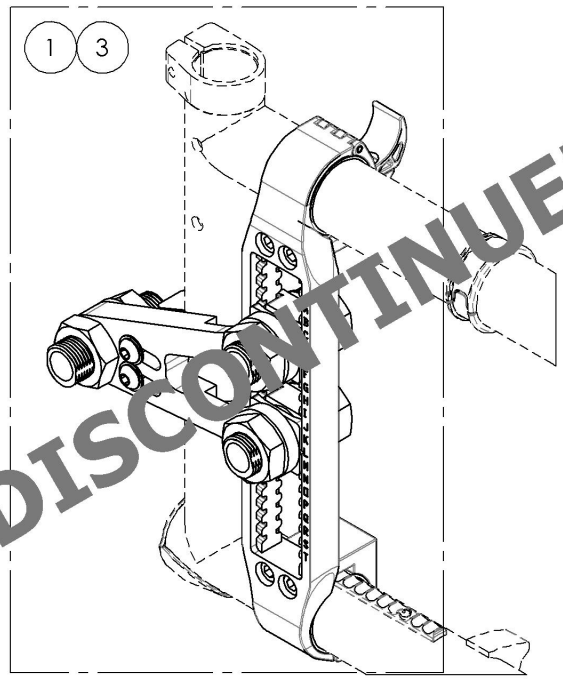

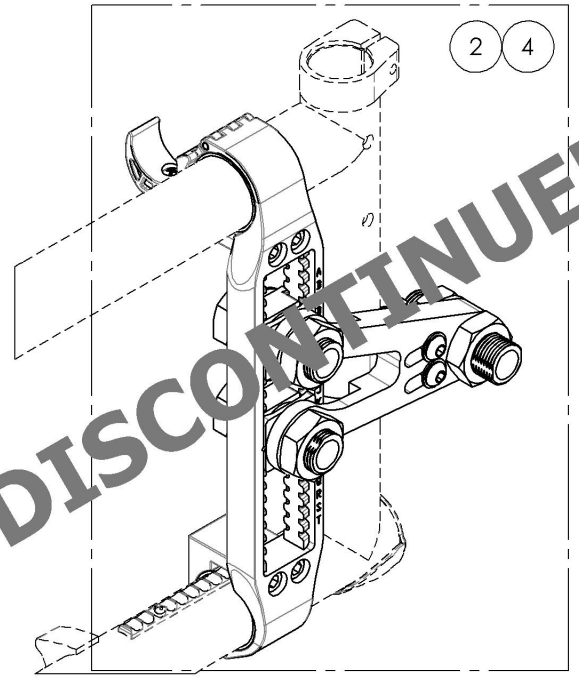

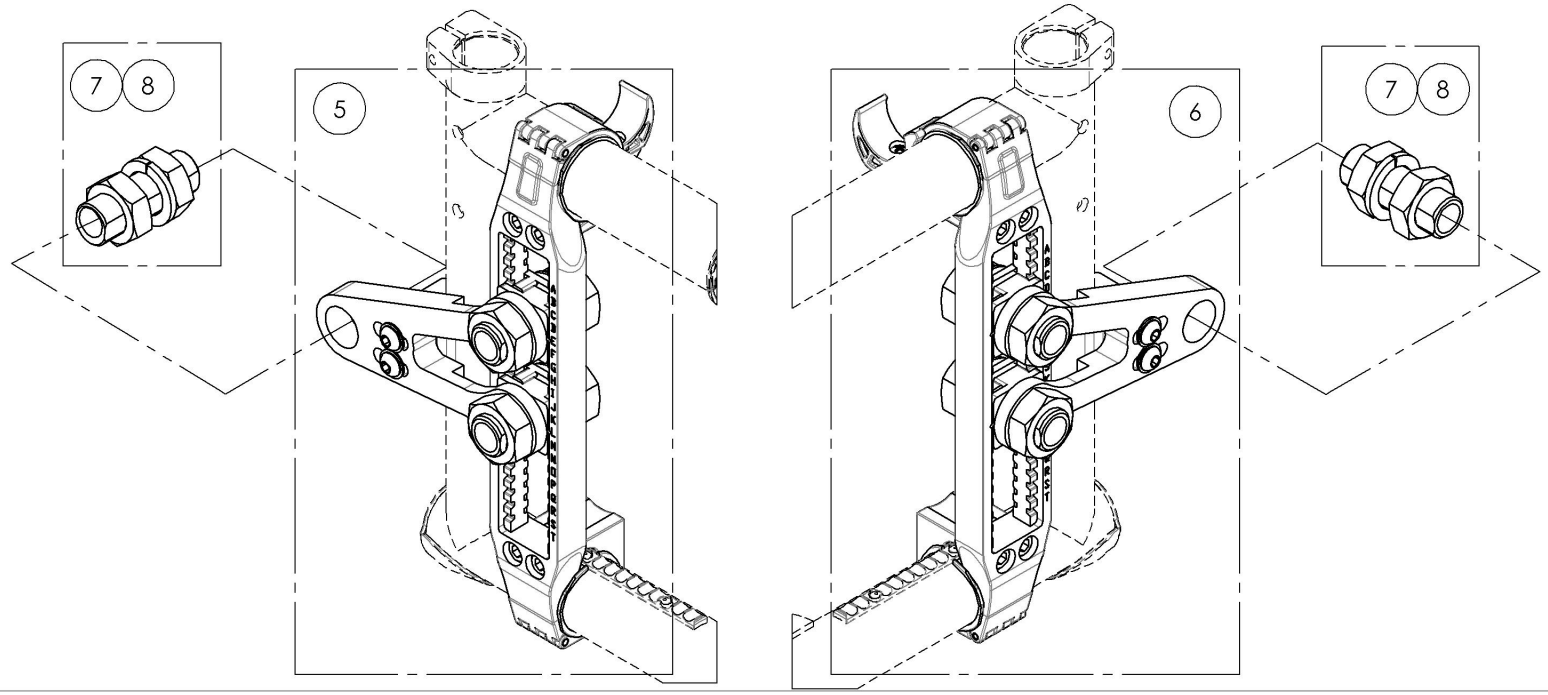

MAKE SURE TO HAVE YOUR SERIAL NUMBER NEARBY WHEN ORDERING PARTS FOR YOUR MOTION COMPOSITES WHEELCHAIR

9001564_9001565
Amputee Axle Plate - Adjustable, Right

ITEM NO.	PARTNO	DESCRIPTION	9001564 /QTY.	9001565 /QTY.
1	21506	COMPLETE MOUNTING ASSEMBLED	1	1
2	99536	NUT M18X1.5	2	2
3	99597	LOCK WASHER M18	1	1
4	21008	0° BUSHING M18x1.5	1	-
5	21009	3° BUSHING M18x1.5	-	1
6	21713	AMPUTE KIT V2 RIGHT - ASSEMBLY	1	1

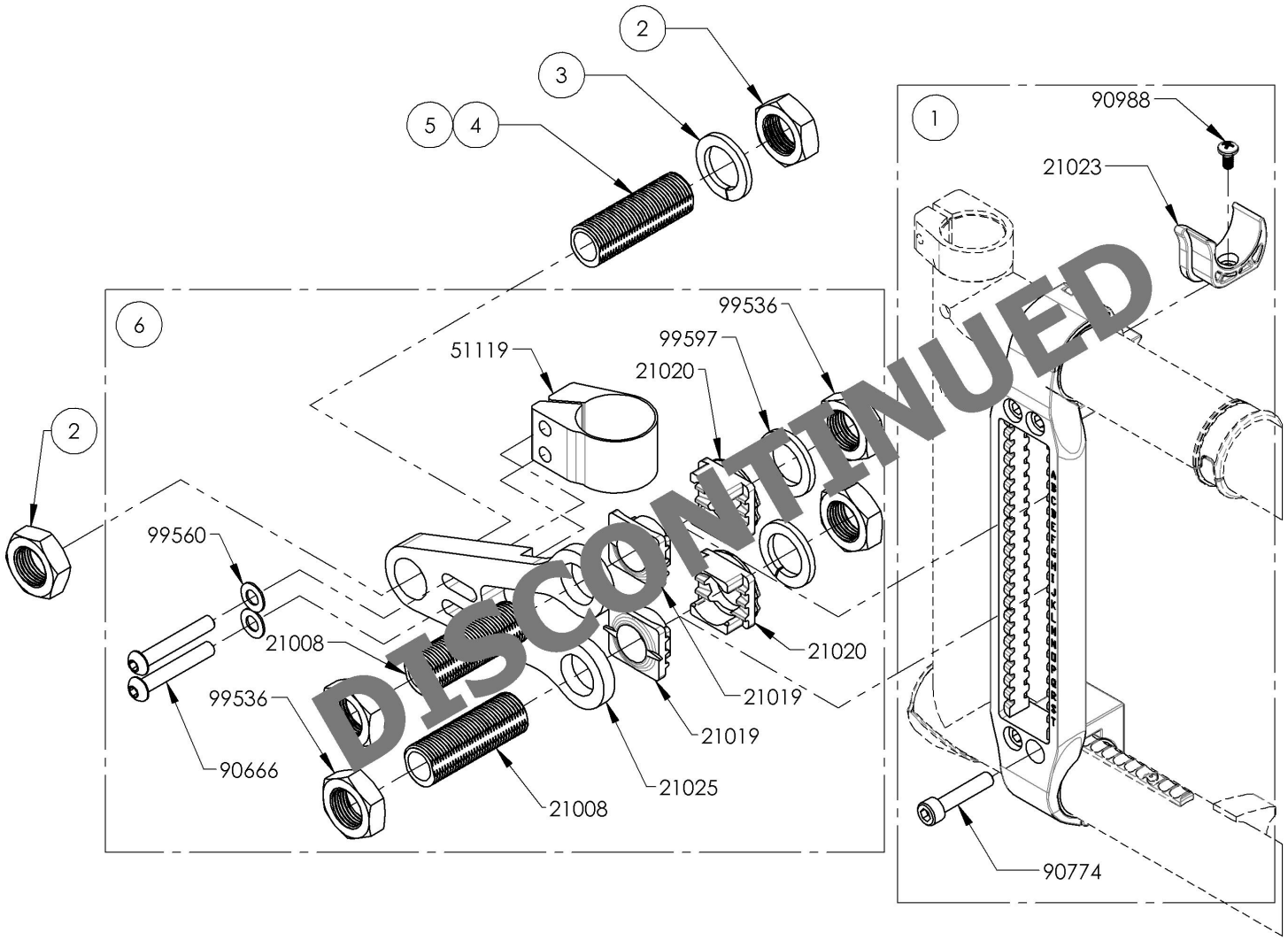

9001564
Amputee Axle Plate -
Adjustable, Right, 0° Camber

REPLACED BY #9001748

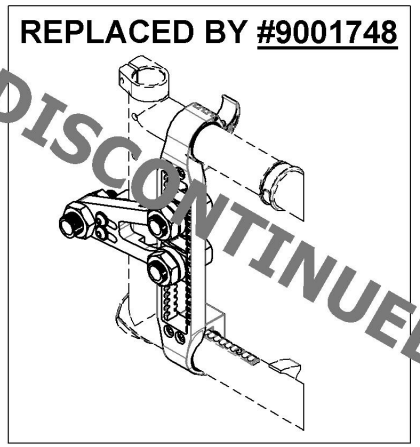

9001565
Amputee Axle Plate -
Adjustable, Right, 3° Camber

REPLACED BY #9001749

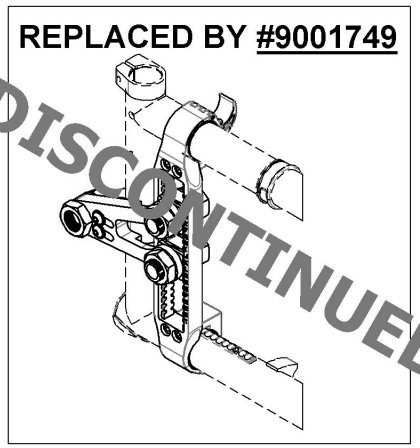

DISCONTINUED
DISCONTINUED
DISCONTINUED

MAKE SURE TO HAVE YOUR SERIAL NUMBER NEARBY WHEN ORDERING PARTS FOR YOUR MOTION COMPOSITES WHEELCHAIR

9001566_9001567
Amputee Axle Plate - Adjustable, Left

ITEM NO.	PARTNO	DESCRIPTION	9001566 /QTY.	9001567 /QTY.
1	21506	COMPLETE MOUNTING ASSEMBLED	1	1
2	99536	NUT M18X1.5	2	2
3	99597	LOCK WASHER M18	1	1
4	21008	0° BUSHING M18x1.5	1	-
5	21009	3° BUSHING M18x1.5	-	1
6	21714	AMPUTE KIT V2 LEFT - ASSEMBLY	1	1

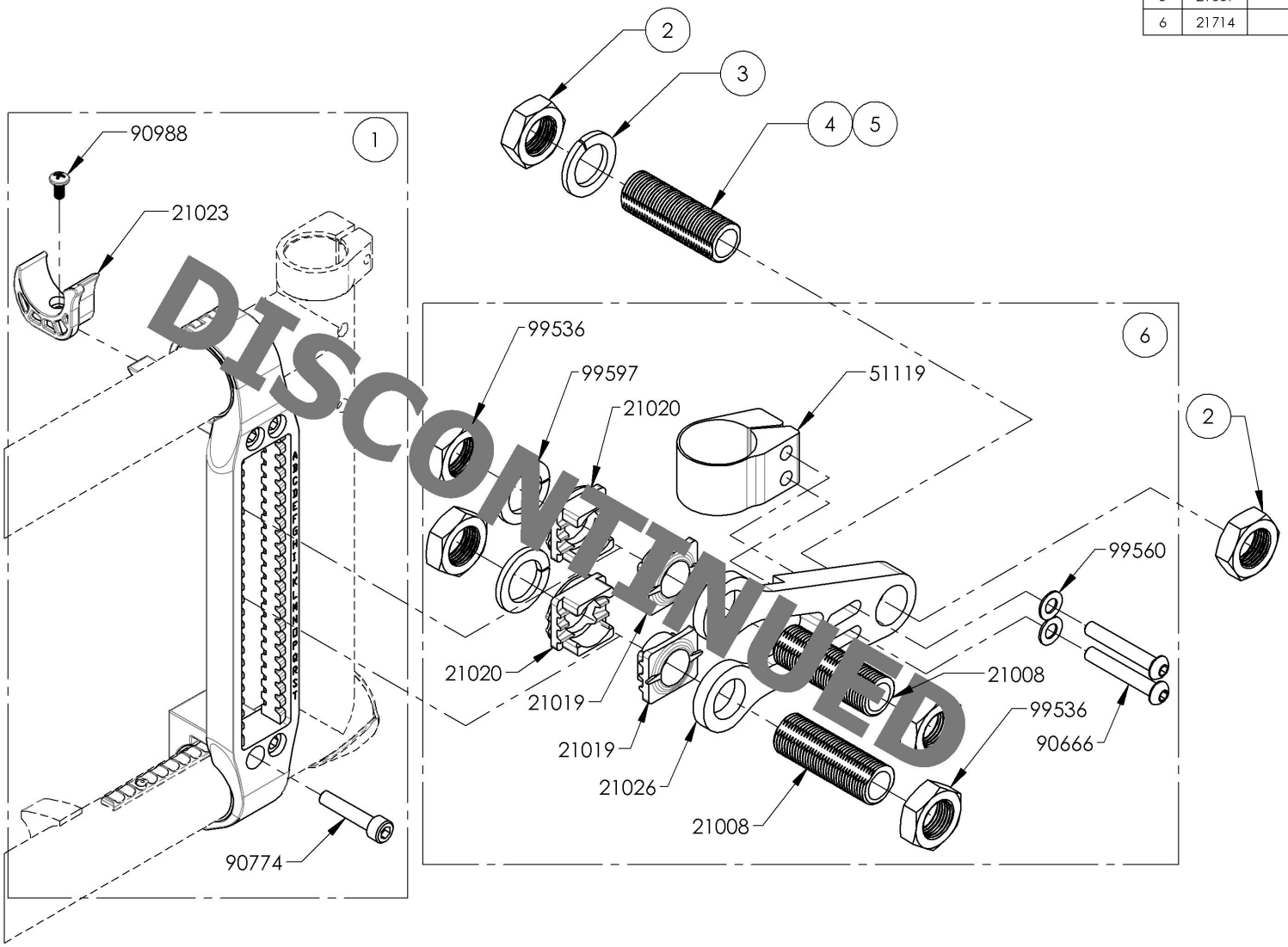

DISCONTINUED

9001566
Amputee Axle Plate -
Adjustable, Left, 0° Camber

REPLACED BY #9001750

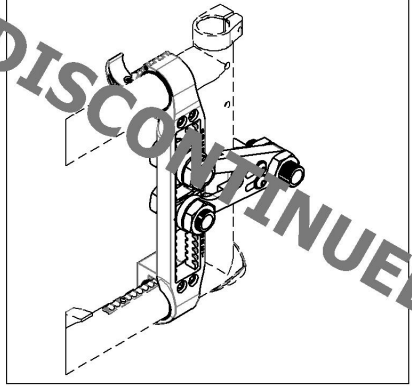

DISCONTINUED

9001567
Amputee Axle Plate -
Adjustable, Left, 3° Camber

REPLACED BY #9001751

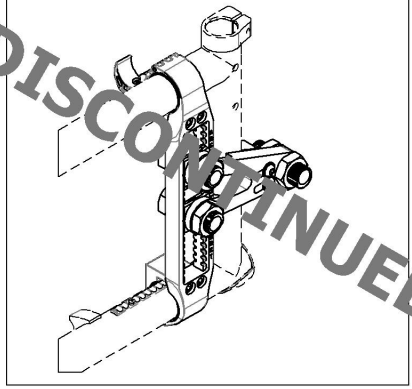

DISCONTINUED

MAKE SURE TO HAVE YOUR SERIAL NUMBER NEARBY WHEN ORDERING PARTS FOR YOUR MOTION COMPOSITES WHEELCHAIR

9001748
Amputee Axle Plate V2B - Adjustable, Right

ITEM NO.	PARTNO	DESCRIPTION	9001748 /QTY.
1	21511	COMPLETE MOUNTING PLATE ASSEMBLY V2B	1
2	21717	AMPUTE KIT V2B, RIGHT - ASSEMBLY	1

APPLICABLE ON WHEELCHAIRS SINCE 2017/01/16

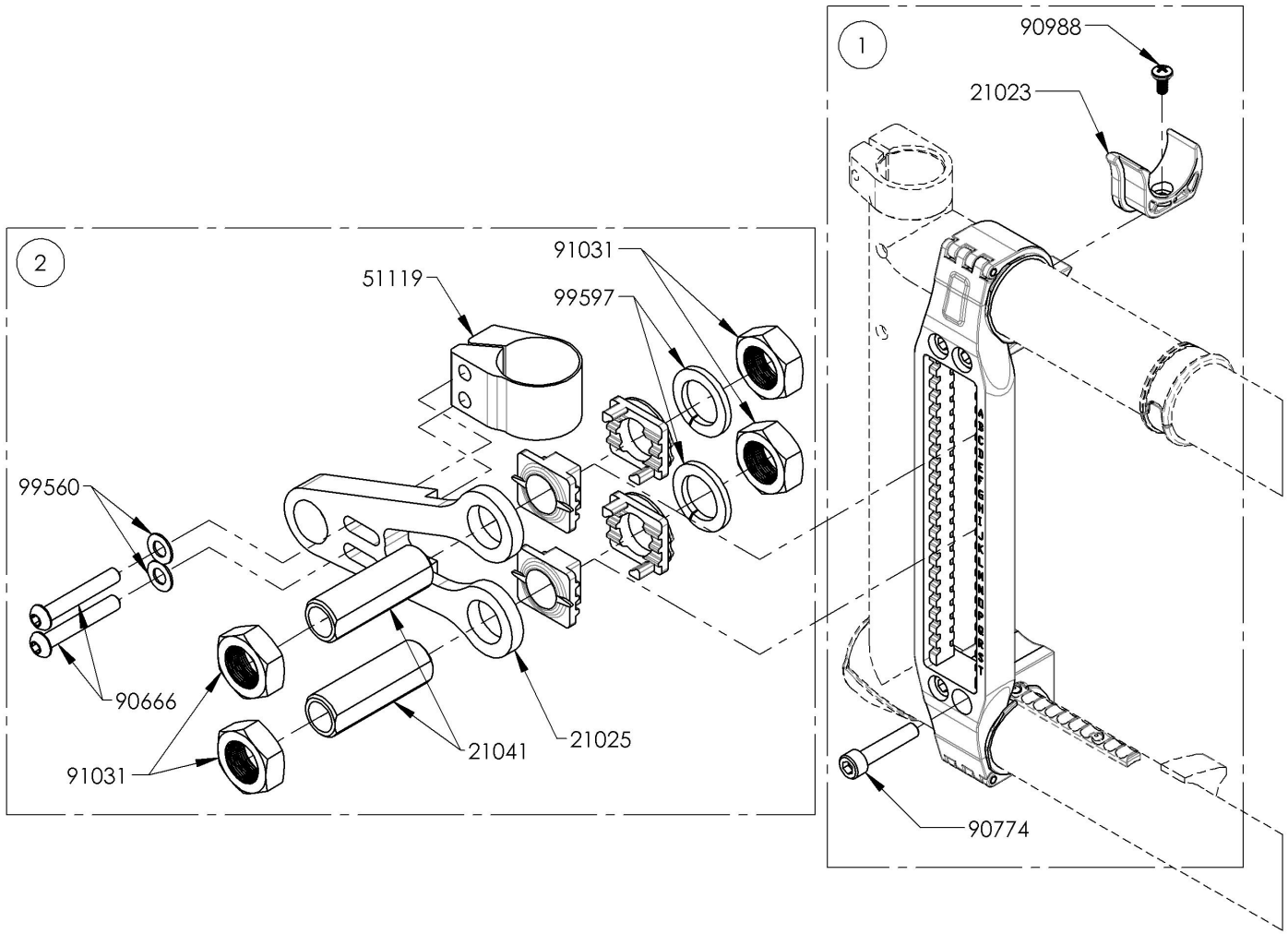

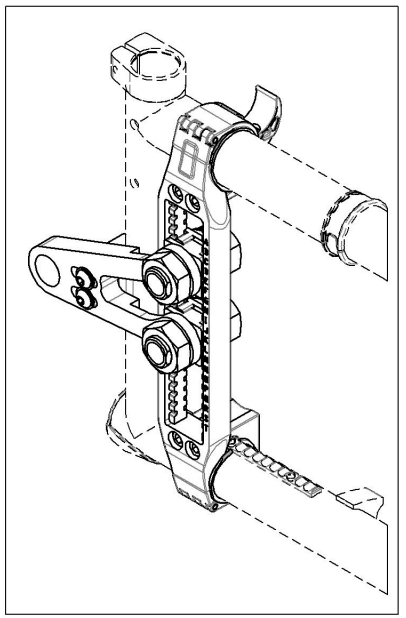

MAKE SURE TO HAVE YOUR SERIAL NUMBER NEARBY WHEN ORDERING PARTS FOR YOUR MOTION COMPOSITES WHEELCHAIR

9001750
Amputee Axle Plate V2B - Adjustable, Left

ITEM NO.	PARTNO	DESCRIPTION	9001750 /QTY.
1	21511	COMPLETE MOUNTING PLATE ASSEMBLY V2B	1
2	21718	AMPUTE KIT V2B, LEFT - ASSEMBLY	1

APPLICABLE ON WHEELCHAIRS SINCE 2017/01/16

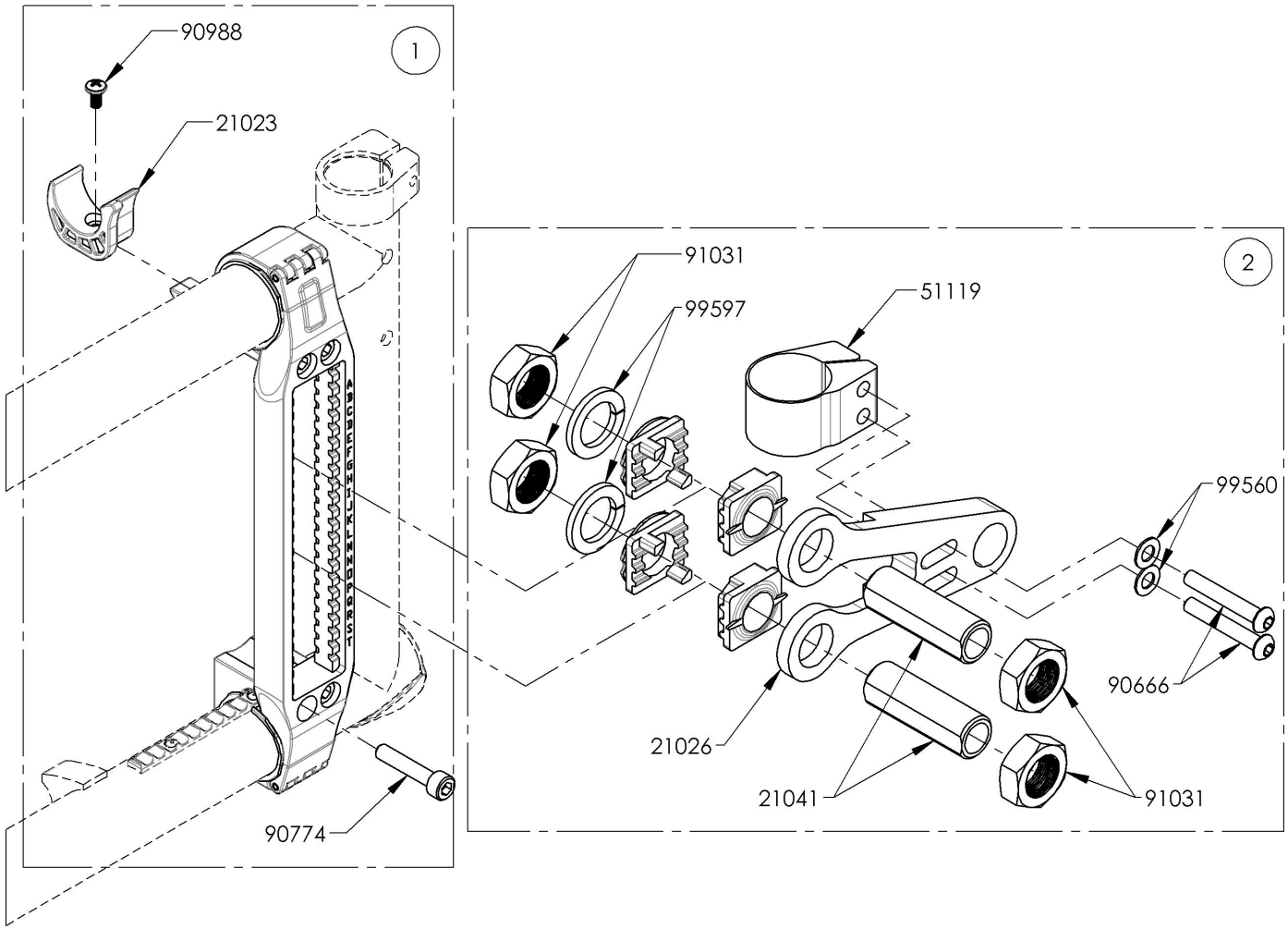

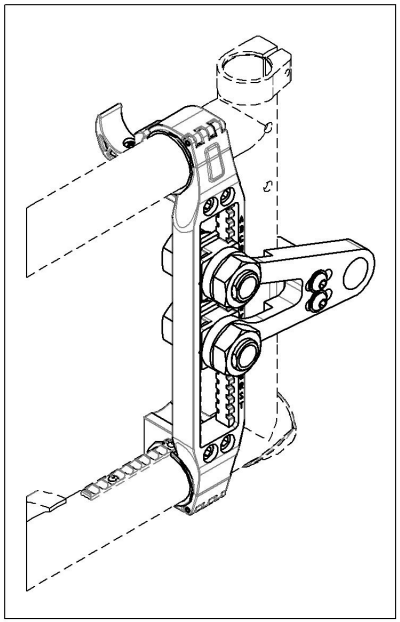

MAKE SURE TO HAVE YOUR SERIAL NUMBER NEARBY WHEN ORDERING PARTS FOR YOUR MOTION COMPOSITES WHEELCHAIR

9002444_9002445
Rear Wheel - Axle Bushing + Hardware

ITEM NO.	PARTNO	DESCRIPTION	9002444 /QTY.	9002445 /QTY.
1	21041	0 DEG BUSHING M18x1	1	-
2	21042	3° BUSHING M18x1	-	1
3	91031	JAM NUT M18 x 1.0	2	2
4	99597	LOCK WASHER M18	1	1

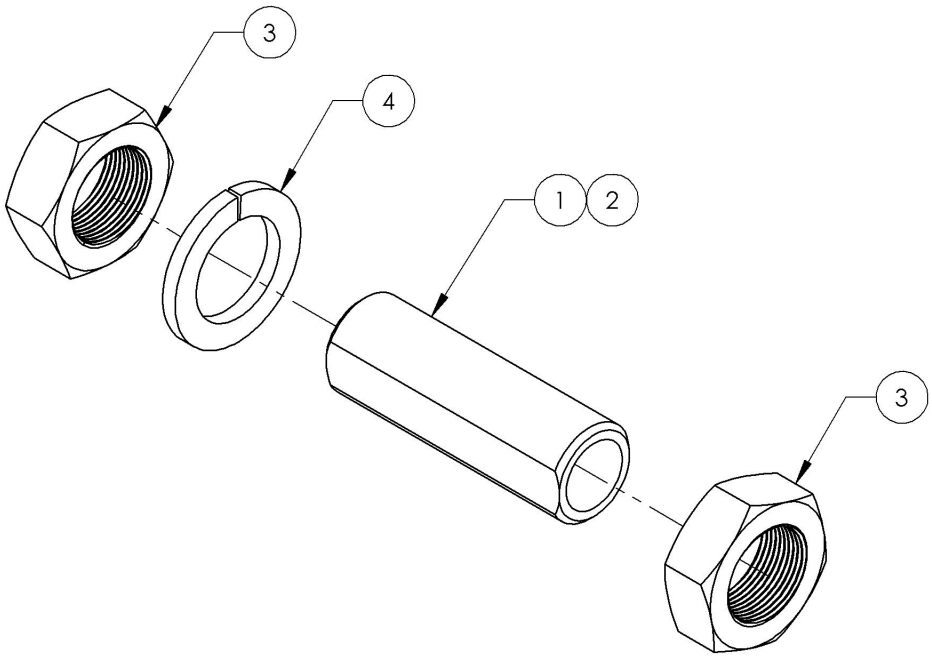

9002444

Rear Wheel - 0° Axle Bushing + Hardware

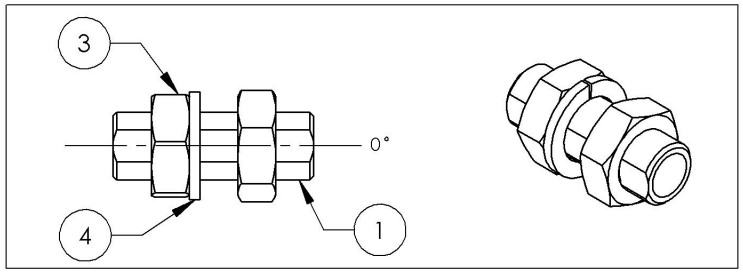

9002445

Rear Wheel - 3° Axle Bushing + Hardware

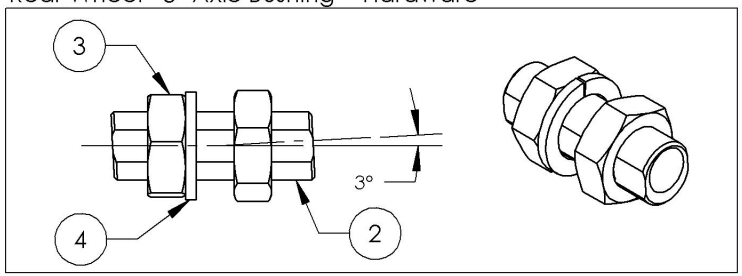

MAKE SURE TO HAVE YOUR SERIAL NUMBER NEARBY WHEN ORDERING PARTS FOR YOUR MOTION COMPOSITES WHEELCHAIR

Rear Wheel Catalogue
One Arm Drive Sunrise kit Adaptor

ITEM NO.	PARTNO	DESCRIPTION	QTY
1	9002262	Rear Wheel - One Arm Drive Sunrise Kit Adaptor	1

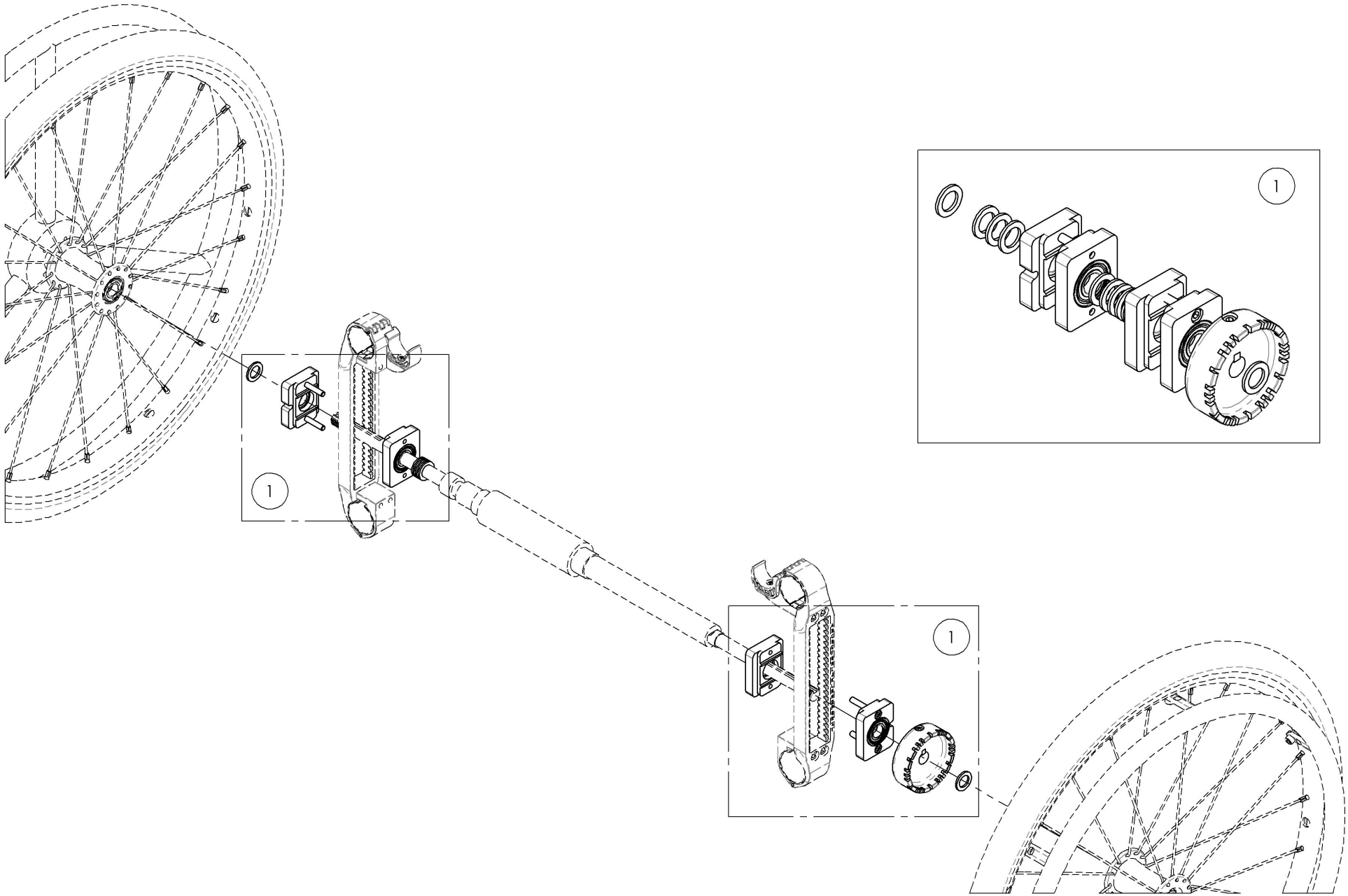

MAKE SURE TO HAVE YOUR SERIAL NUMBER NEARBY WHEN ORDERING PARTS FOR YOUR MOTION COMPOSITES WHEELCHAIR

9002262
Rear Wheel - One Arm Drive Sunrise Kit Adaptor

ITEM NO.	PARTNO	DESCRIPTION	9002262 /QTY.
1	51542	ONE ARM DRIVE ADAPTOR KIT WITH BILINGUAL INSTRUCTIONS	1

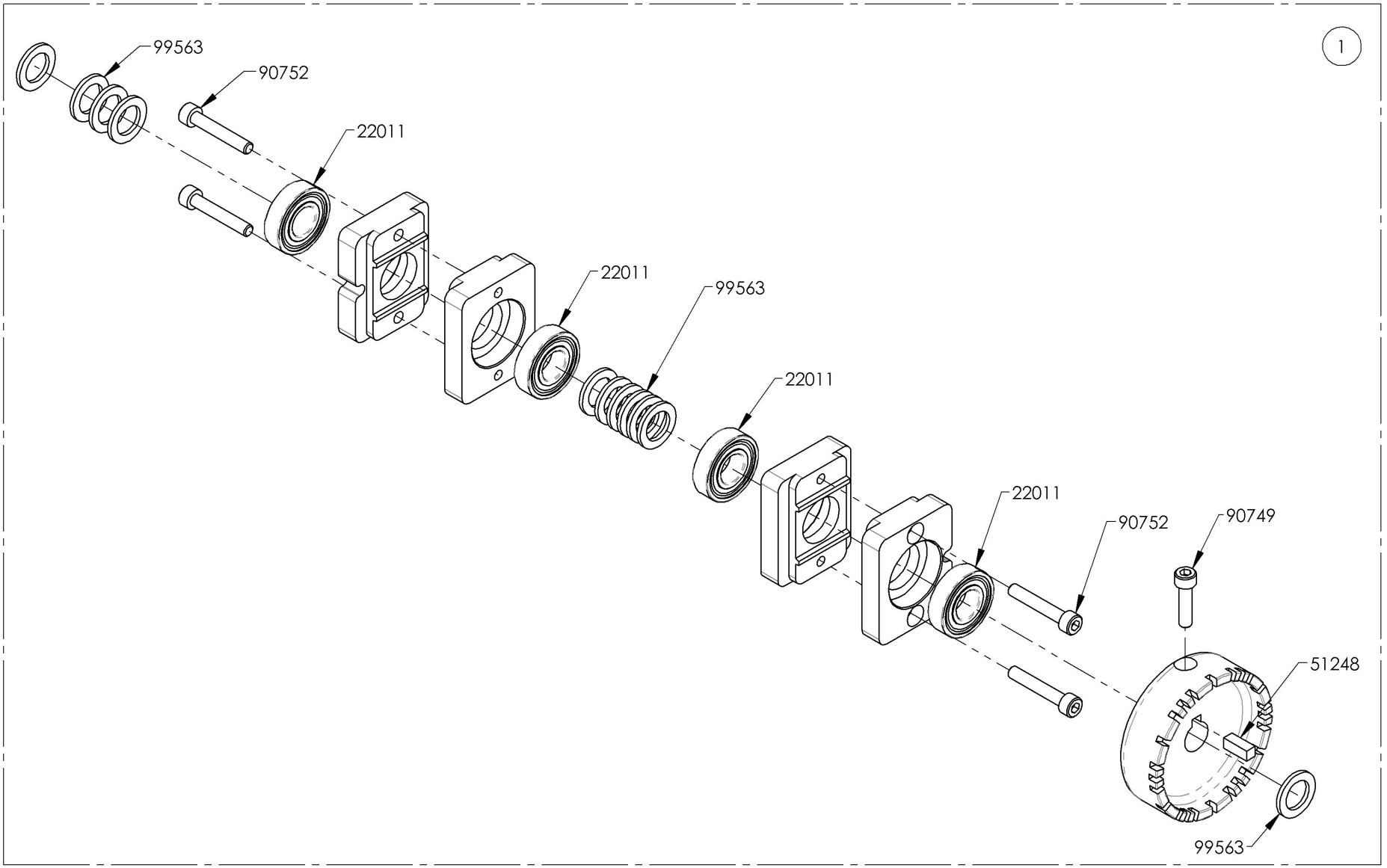

MAKE SURE TO HAVE YOUR SERIAL NUMBER NEARBY WHEN ORDERING PARTS FOR YOUR MOTION COMPOSITES WHEELCHAIR

ITEM NO.	PARTNO	DESCRIPTION	QTY
1	9002284	Adaptor Kit - E-Motion, Twion & E-Fix (Pair)	1
2	9002495	Adaptor Kit - E-Motion, Twion & E-Fix, V2B (Pair)	1

FOR OLD GENERATION OF
V2 MOUNTING PLATE ONLY

1

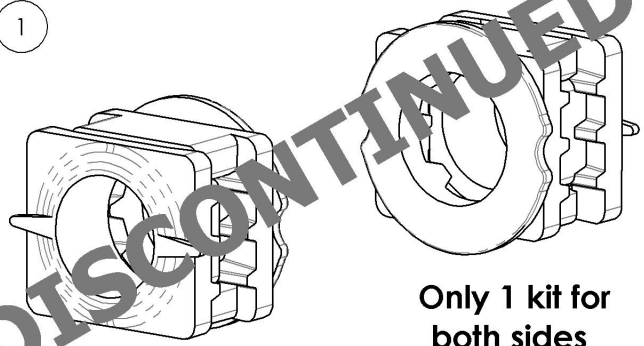

Only 1 kit for both sides

DISCONTINUED

2

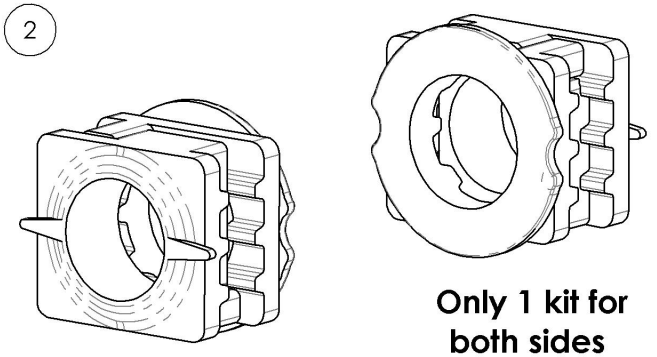

Only 1 kit for both sides

E-MOTION & TWION

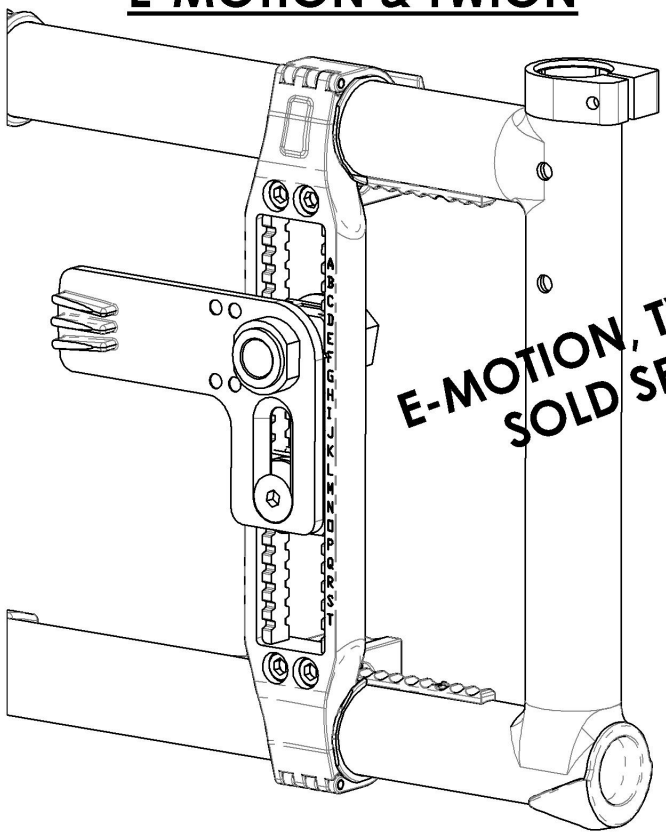

E-MOTION, TWION & E-FIX
SOLD SEPARATELY

E-FIX

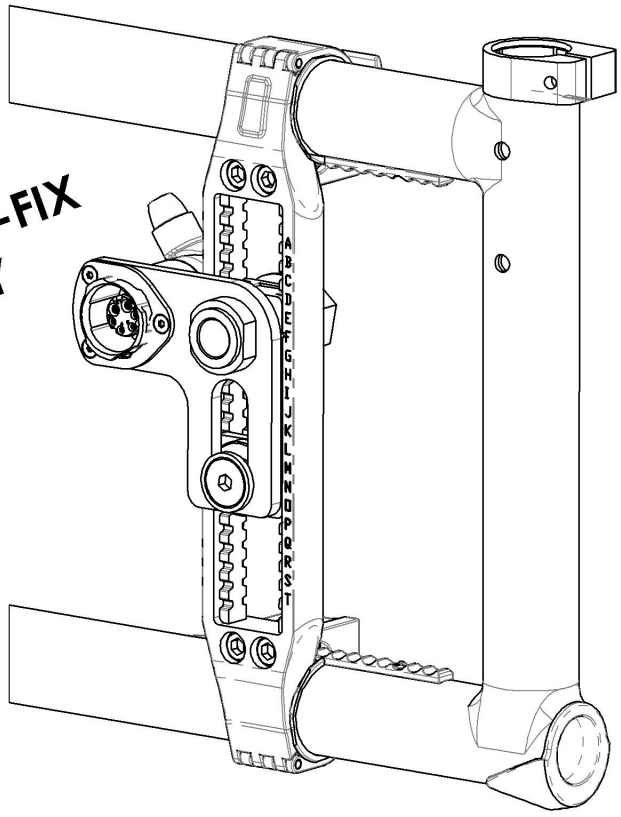

MAKE SURE TO HAVE YOUR SERIAL NUMBER NEARBY WHEN ORDERING PARTS FOR YOUR MOTION COMPOSITES WHEELCHAIR

9002284
Adaptor Kit - E-Motion, Twion & E-Fix (Pair)

ITEM NO.	PARTNO	DESCRIPTION	9002284 /QTY.
1	21508	ASSY 0 DEG PLATES	2

9002284
Adaptor Kit - E-Motion, Twion & E-Fix (Pair)

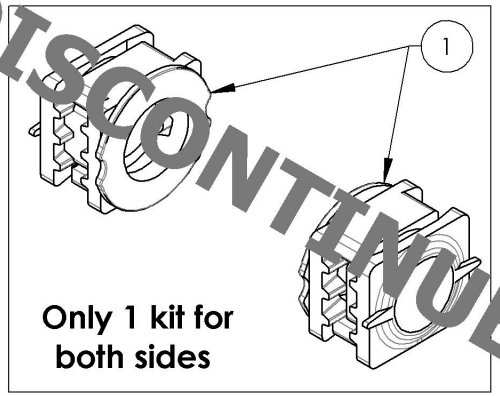

DISCONTINUED

FOR V2 MOUNTING PLATE OLD GENERATION
SEE #9002495 FOR V2B MOUNTING PLATE

E-MOTION & TWION

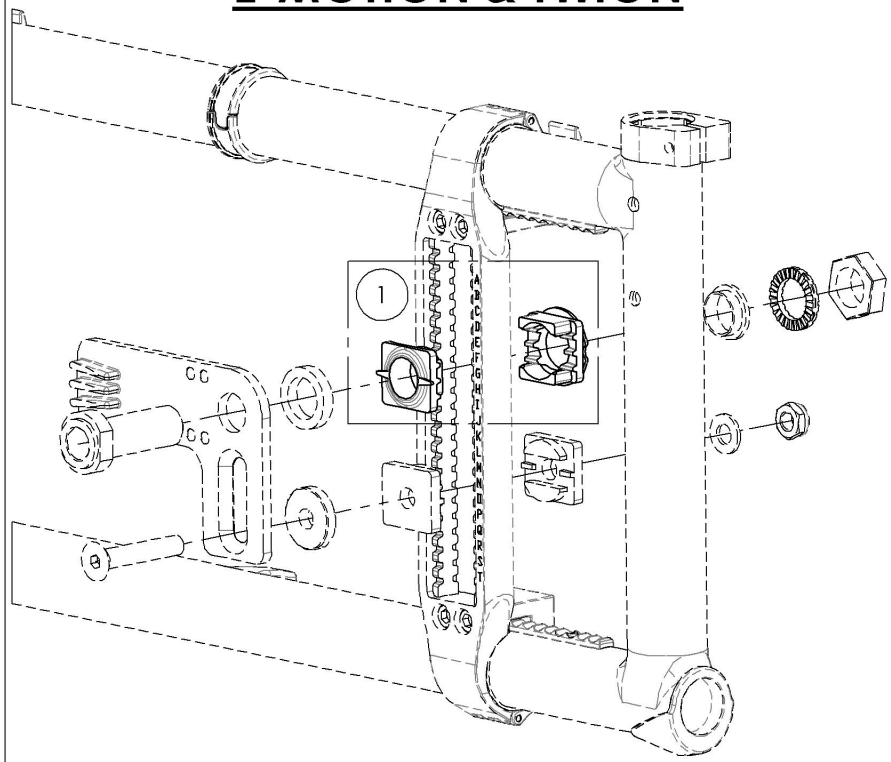

E-MOTION, TWION & E-FIX SOLD SEPARATELY

E-FIX

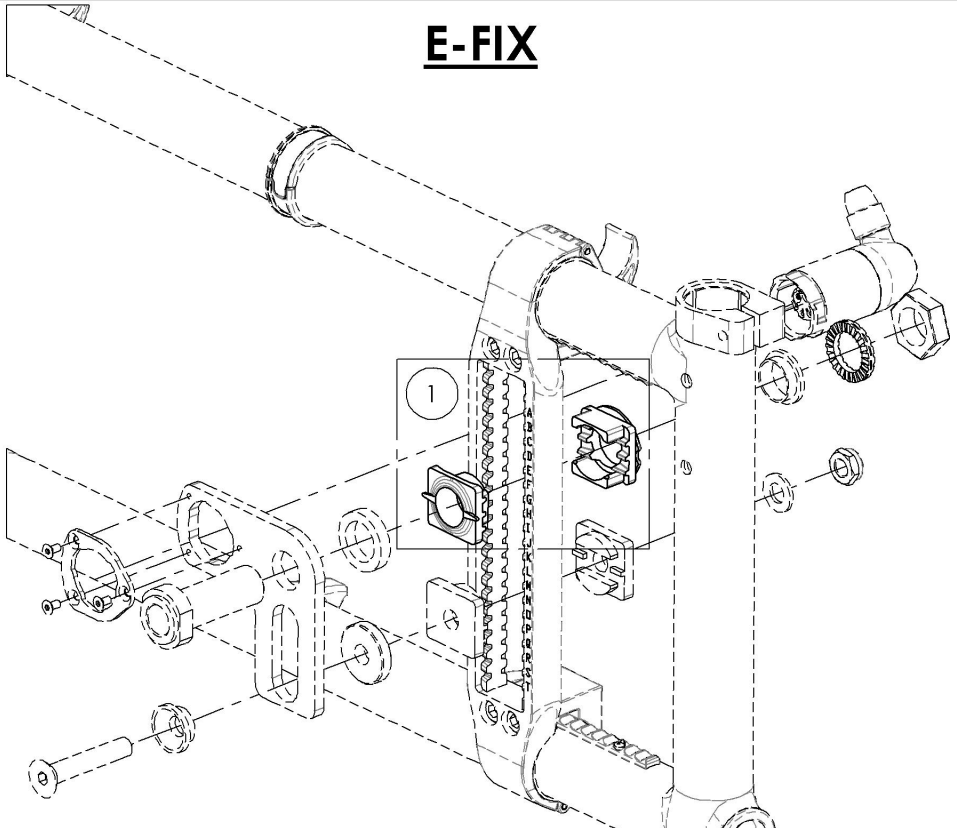

E-MOTION, TWION & E-FIX SOLD SEPARATELY

MAKE SURE TO HAVE YOUR SERIAL NUMBER NEARBY WHEN ORDERING PARTS FOR YOUR MOTION COMPOSITES WHEELCHAIR

9002495
Adaptor Kit - E-Motion, Twion & E-Fix, V2B (Pair)

ITEM NO.	PARTNO	DESCRIPTION	9002495 /QTY.
1	21514	V2B 0° POSITIONNING NUT AND FACE PLATE ASSEMBLY	2

9002495
Adaptor Kit - E-Motion, Twion & E-Fix, V2B (Pair)

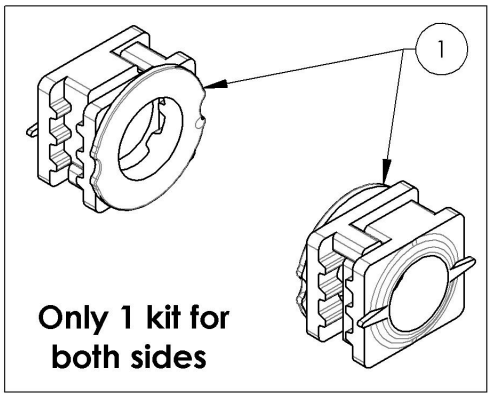

FOR V2B MOUNTING PLATE
SEE #9002284 FOR V2 MOUNTING PLATE

E-MOTION & TWION

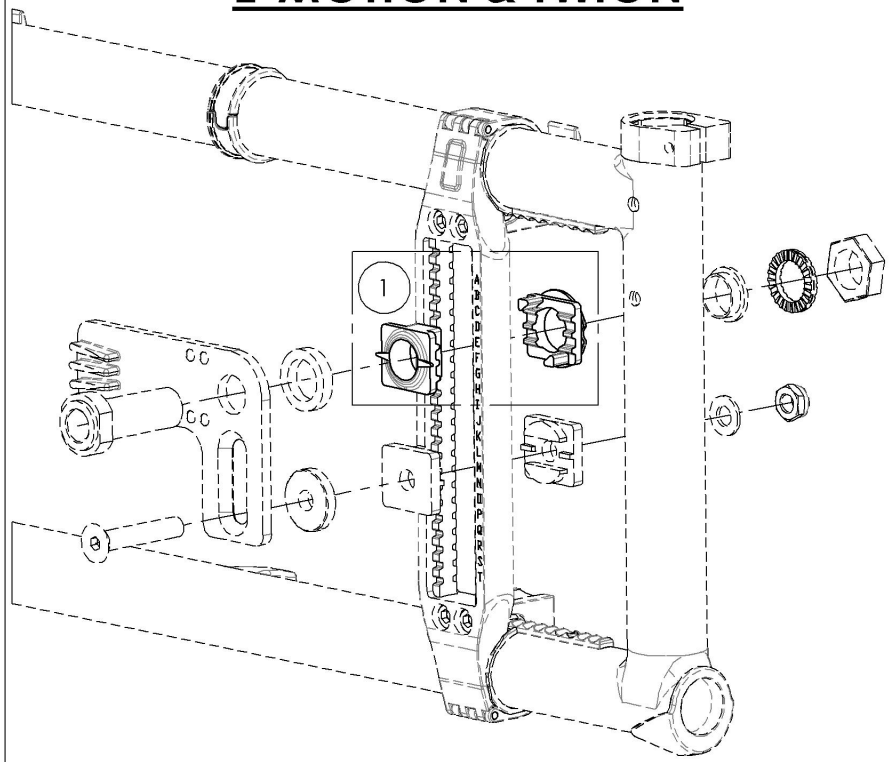

E-MOTION, TWION & E-FIX SOLD SEPARATELY

E-FIX

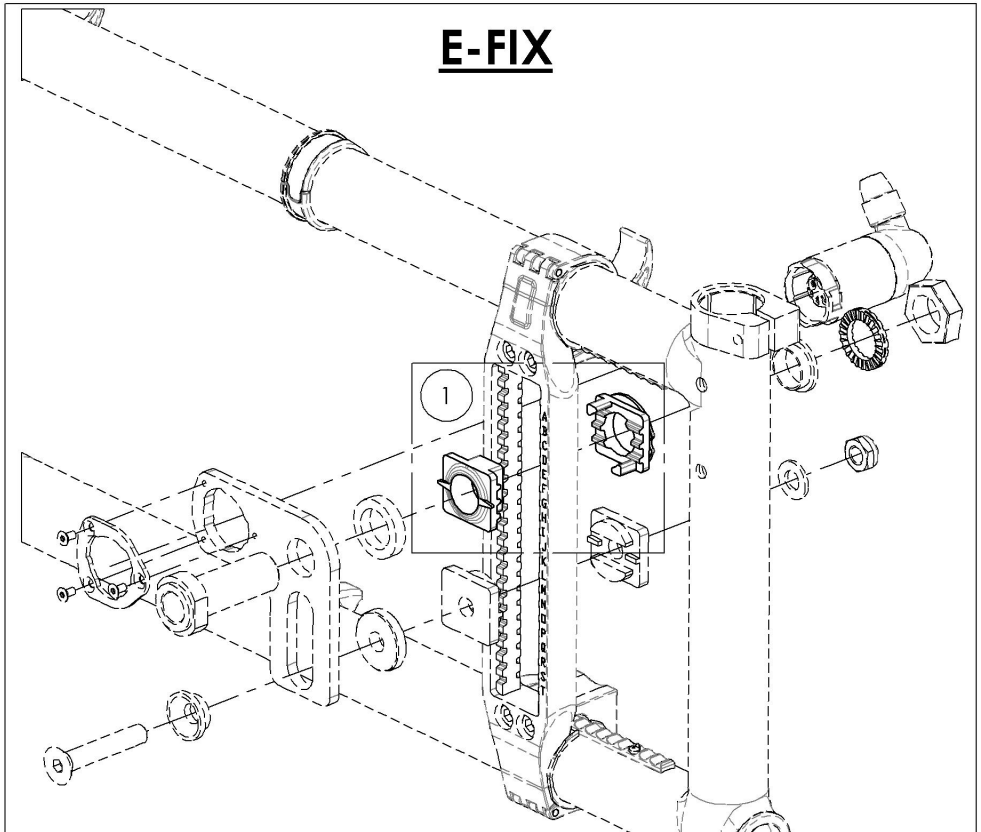

E-MOTION, TWION & E-FIX SOLD SEPARATELY

MAKE SURE TO HAVE YOUR SERIAL NUMBER NEARBY WHEN ORDERING PARTS FOR YOUR MOTION COMPOSITES WHEELCHAIR

Wheel Locks Catalogue
Wheel Lock - Push & Pull

ITEM NO.	PARTNO	DESCRIPTION	QTY.
1	9002216	Wheel Lock - Newton Spring Loaded Push to lock, Right	1
2	9002217	Wheel Lock - Newton Spring Loaded Push to lock, Left	1
3	9002218	Wheel Lock - Newton Spring Loaded Push to lock, 6 in Removable Extension Handle, Right	1
4	9002219	Wheel Lock - Newton Spring Loaded Push to lock, 6 in Removable Extension Handle, Left	1
5	9001128	Wheel Lock - Pull to Lock, Right	1
6	9001129	Wheel Lock - Pull to Lock, Left	1
7	9001130	Wheel Lock - Pull to Lock, 6 in Removable Extension Handle, Right	1
8	9001131	Wheel Lock - Pull to Lock, 6 in Removable Extension Handle, Left	1
9	9001573	Wheel Lock - Push to Lock	1
10	9001575	Wheel Lock - Push to Lock, 6 in Removable Extension Handle	1

DISCONTINUED

REPLACED BY #9002216 & #9002217

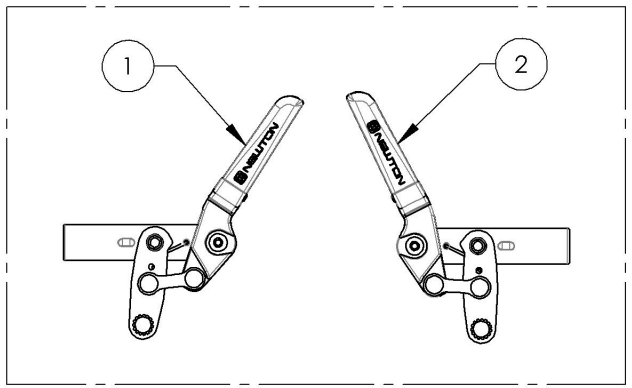

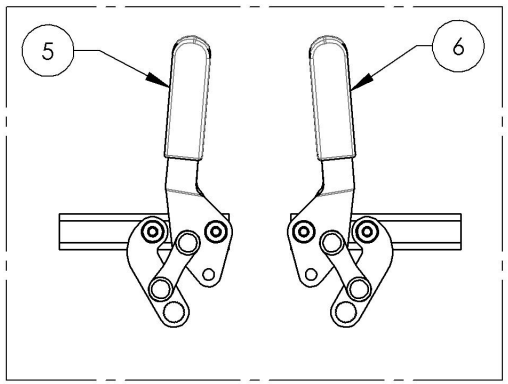

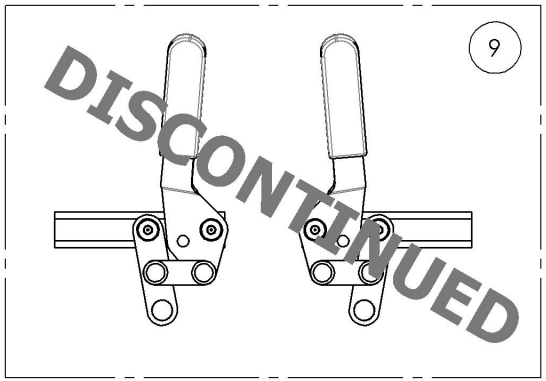

REPLACED BY #9002218 & #9002219

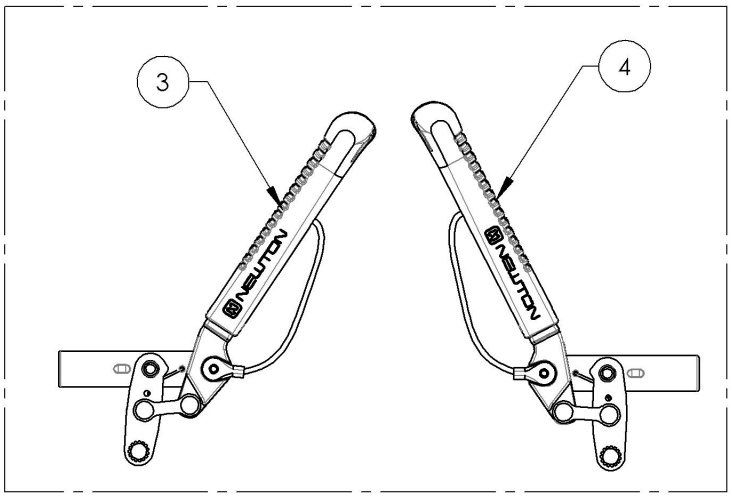

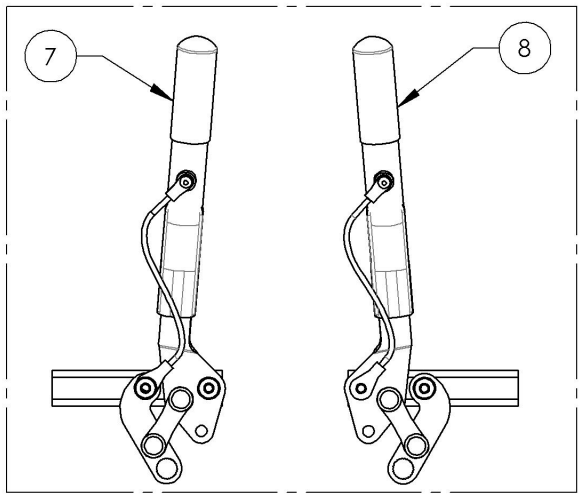

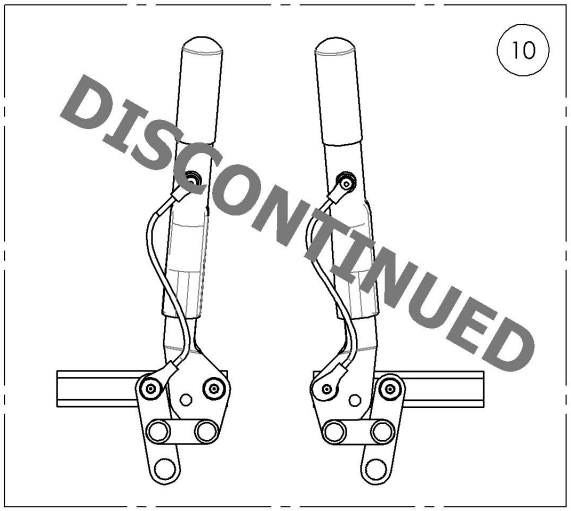

MAKE SURE TO HAVE YOUR SERIAL NUMBER NEARBY WHEN ORDERING PARTS FOR YOUR MOTION COMPOSITES WHEELCHAIR

9002216_9002217
Wheel Lock - Newton Spring Loaded Push to lock

ITEM NO.	PARTNO	DESCRIPTION	9002216 /QTY.	9002217 /QTY.
1	41057	NEWTON PUSH SPRING WHEEL LOCK, RIGHT - ASSY	1	-
2	41056	NEWTON PUSH SPRING WHEEL LOCK, LEFT - ASSY	-	1

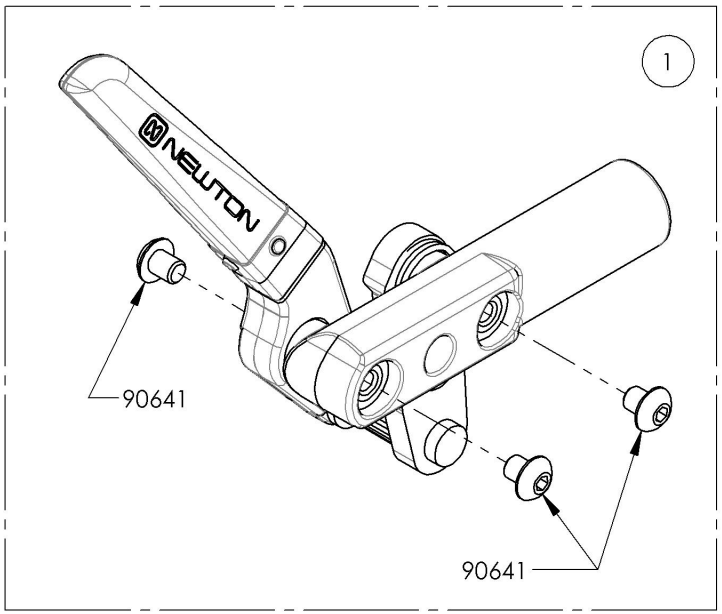

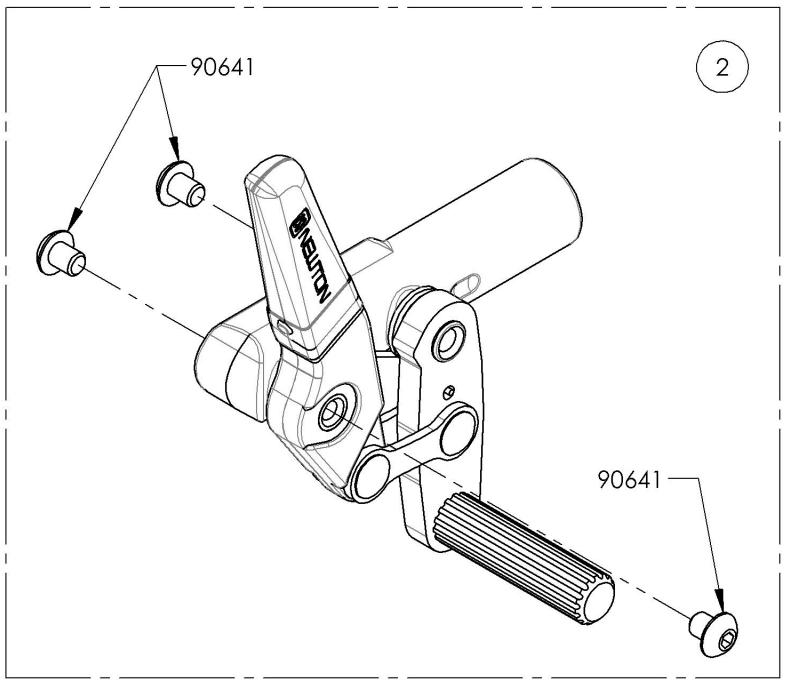

9002216
Wheel Lock - Newton Spring Loaded
Push to lock, Right

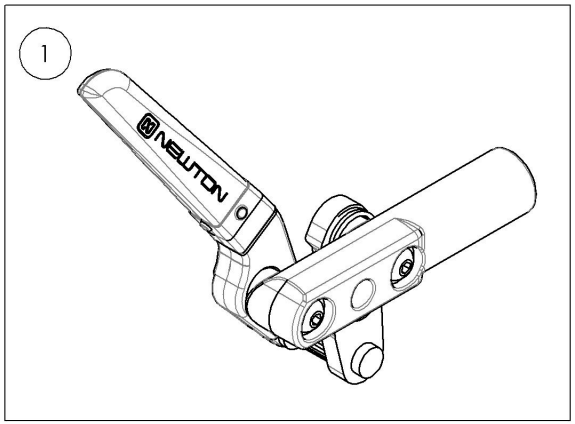

9002217
Wheel Lock - Newton Spring Loaded
Push to lock, Left

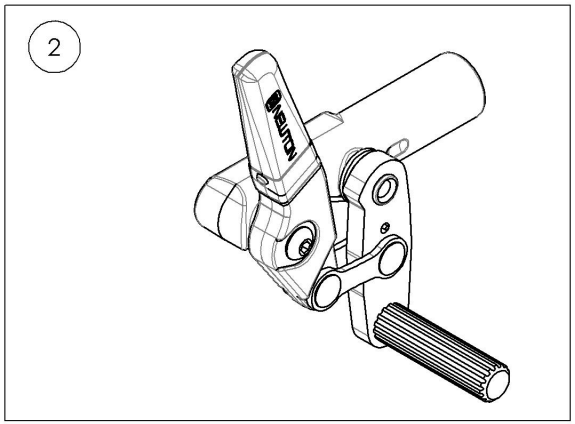

MAKE SURE TO HAVE YOUR SERIAL NUMBER NEARBY WHEN ORDERING PARTS FOR YOUR MOTION COMPOSITES WHEELCHAIR

9002218_9002219
Wheel Lock - Newton Spring Loaded Push to lock, 6 in Removable Extension Handle

ITEM NO.	PARTNO	DESCRIPTION	9002218 /QTY.	9002219 /QTY.	REPLACEMENT PARTS/QTY.
1	41052	NEWTON PUSH SPRING WHEEL LOCK + EXTENSION, RIGHT - ASSY	1	-	-
2	41051	NEWTON PUSH SPRING WHEEL LOCK + EXTENSION, LEFT - ASSY	-	1	-
3	41500	NEWTON REMOVABLE EXTENSION HANDLE - ASSEMBLY	-	-	1

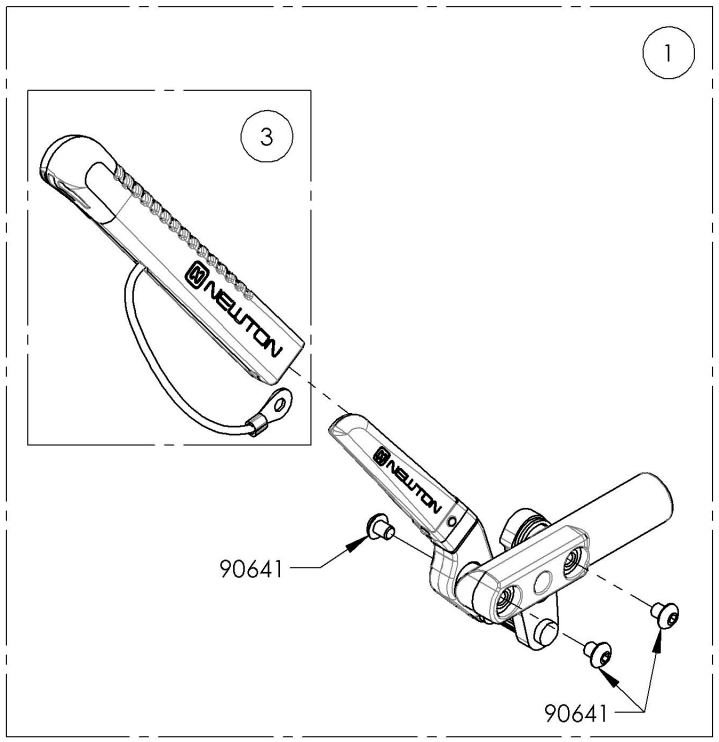

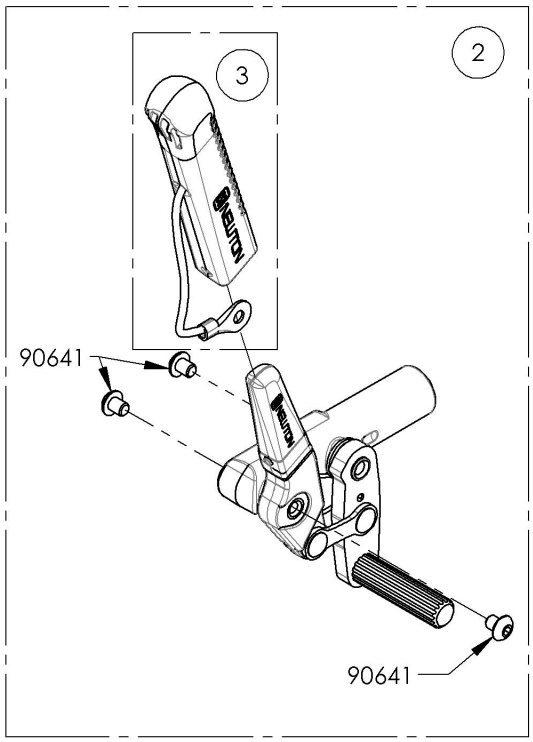

9002218
Wheel Lock - Newton Spring Loaded Push to lock, 6 in Removable Extension Handle

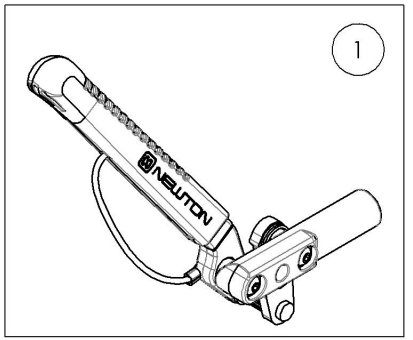

9002219
Wheel Lock - Newton Spring Loaded Push to lock, 6 in Removable Extension Handle

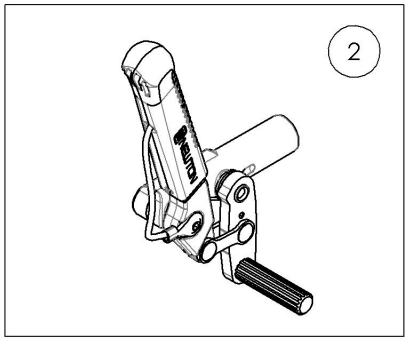

MAKE SURE TO HAVE YOUR SERIAL NUMBER NEARBY WHEN ORDERING PARTS FOR YOUR MOTION COMPOSITES WHEELCHAIR

9001128_9001129
Wheel Lock - Pull to Lock

ITEM NO.	PARTNO	DESCRIPTION	9001128 /QTY.	9001129 /QTY.
1	41078	PULL TO LOCK WHEEL LOCK, RIGHT	1	-
2	41079	PULL TO LOCK WHEEL LOCK, LEFT	-	1

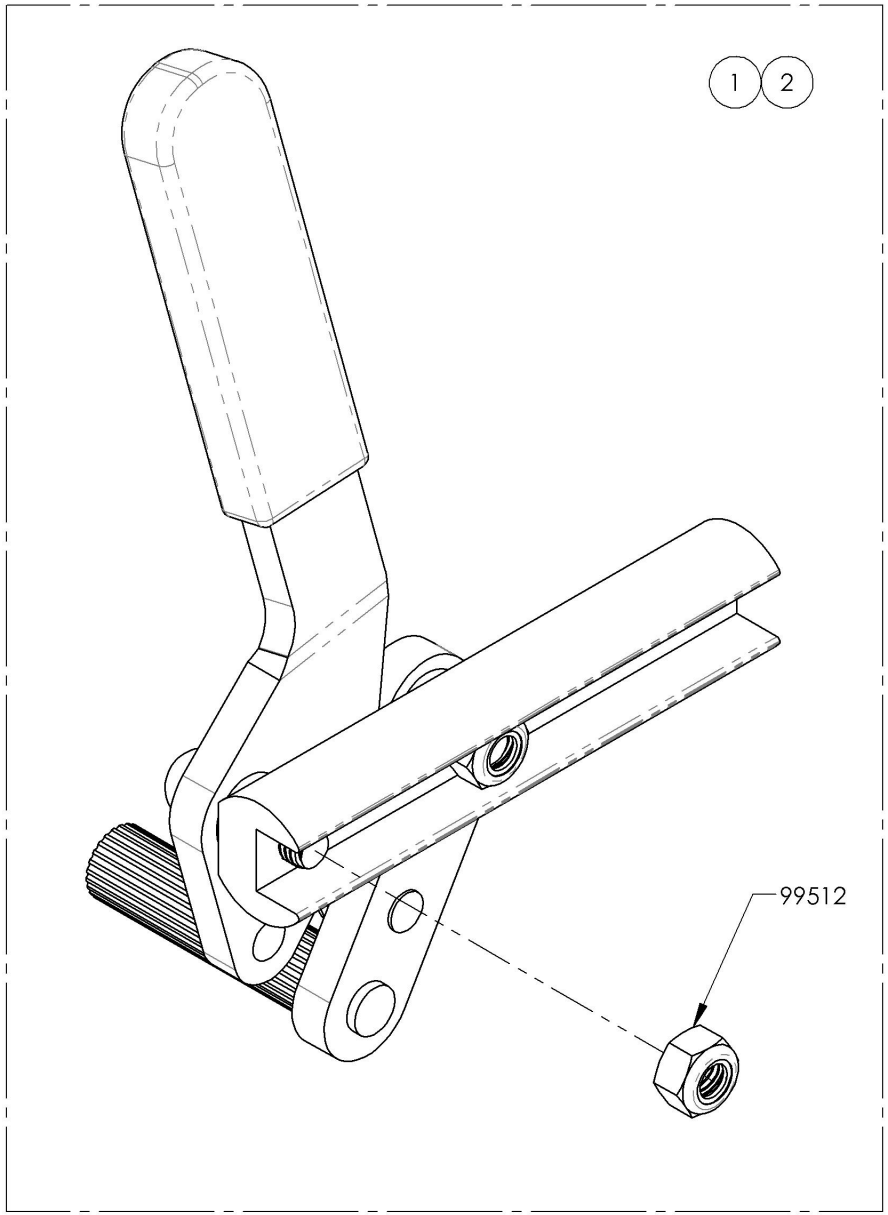

9001128
Wheel Lock - Pull to Lock, Right

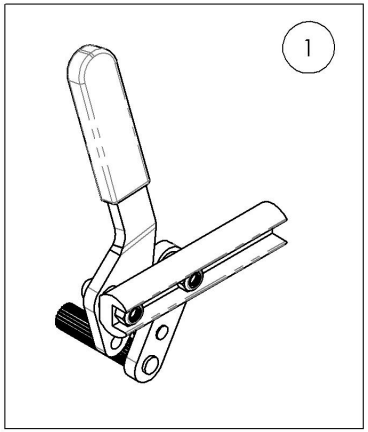

9001129
Wheel Lock - Pull to Lock, Left

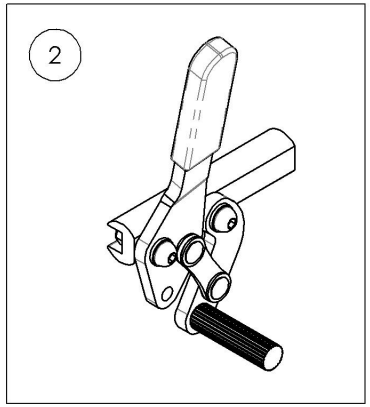

MAKE SURE TO HAVE YOUR SERIAL NUMBER NEARBY WHEN ORDERING PARTS FOR YOUR MOTION COMPOSITES WHEELCHAIR

9001130_9001131
Wheel Lock - Pull to Lock, 6 in Removable Extension Handle

ITEM NO.	PARTNO	DESCRIPTION	9001130 /QTY.	9001131 /QTY.	REPLACEMENT PARTS/QTY.
1	41080	PULL TO LOCK WHEEL LOCK + EXTENSION, RIGHT	1	-	-
2	41081	PULL TO LOCK WHEEL LOCK + EXTENSION, LEFT	-	1	-
3	41005	REMOVABLE EXTENSION HANDLE	-	-	1

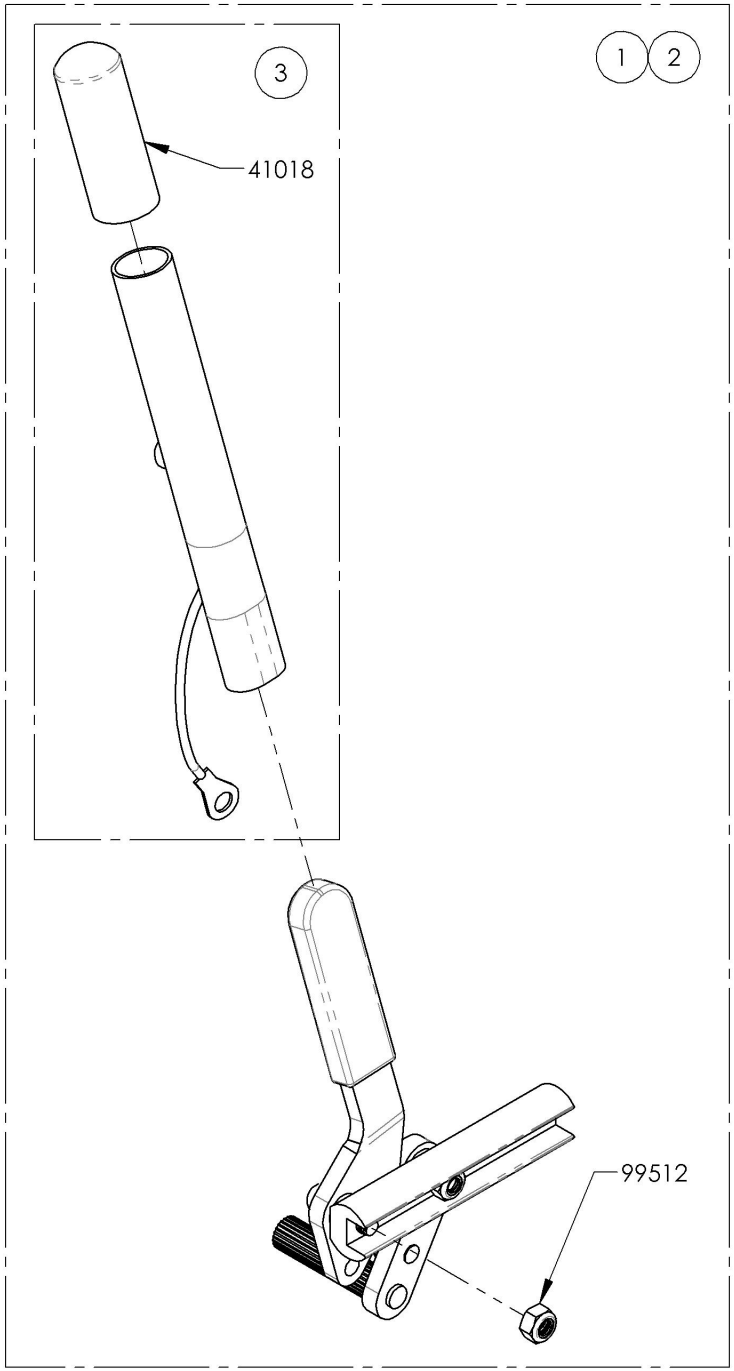

9001130
Wheel Lock - Pull to Lock, 6 in
Removable Extension Handle, Right

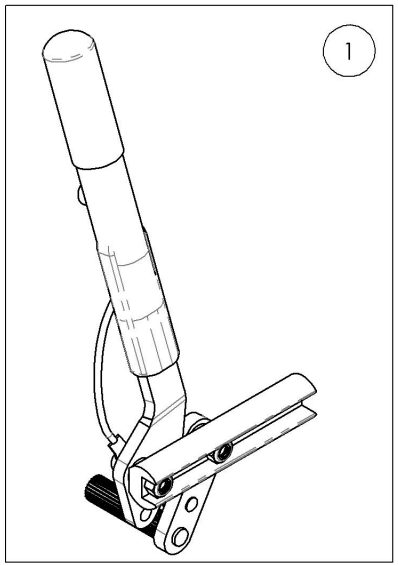

9001131
Wheel Lock - Pull to Lock, 6 in
Removable Extension Handle, Left

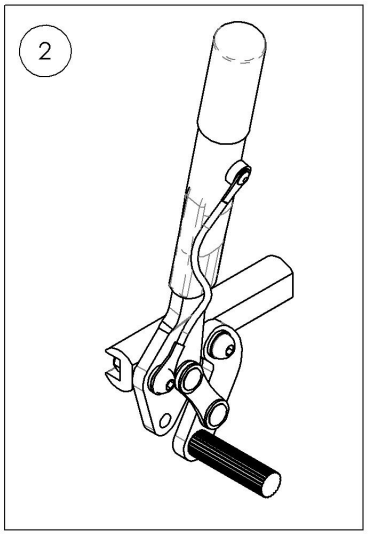

MAKE SURE TO HAVE YOUR SERIAL NUMBER NEARBY WHEN ORDERING PARTS FOR YOUR MOTION COMPOSITES WHEELCHAIR

9001573
Wheel Lock - Push to Lock

ITEM NO.	PARTNO	DESCRIPTION	9001573 /QTY.
1	41002	WHEEL LOCK PUSH	1

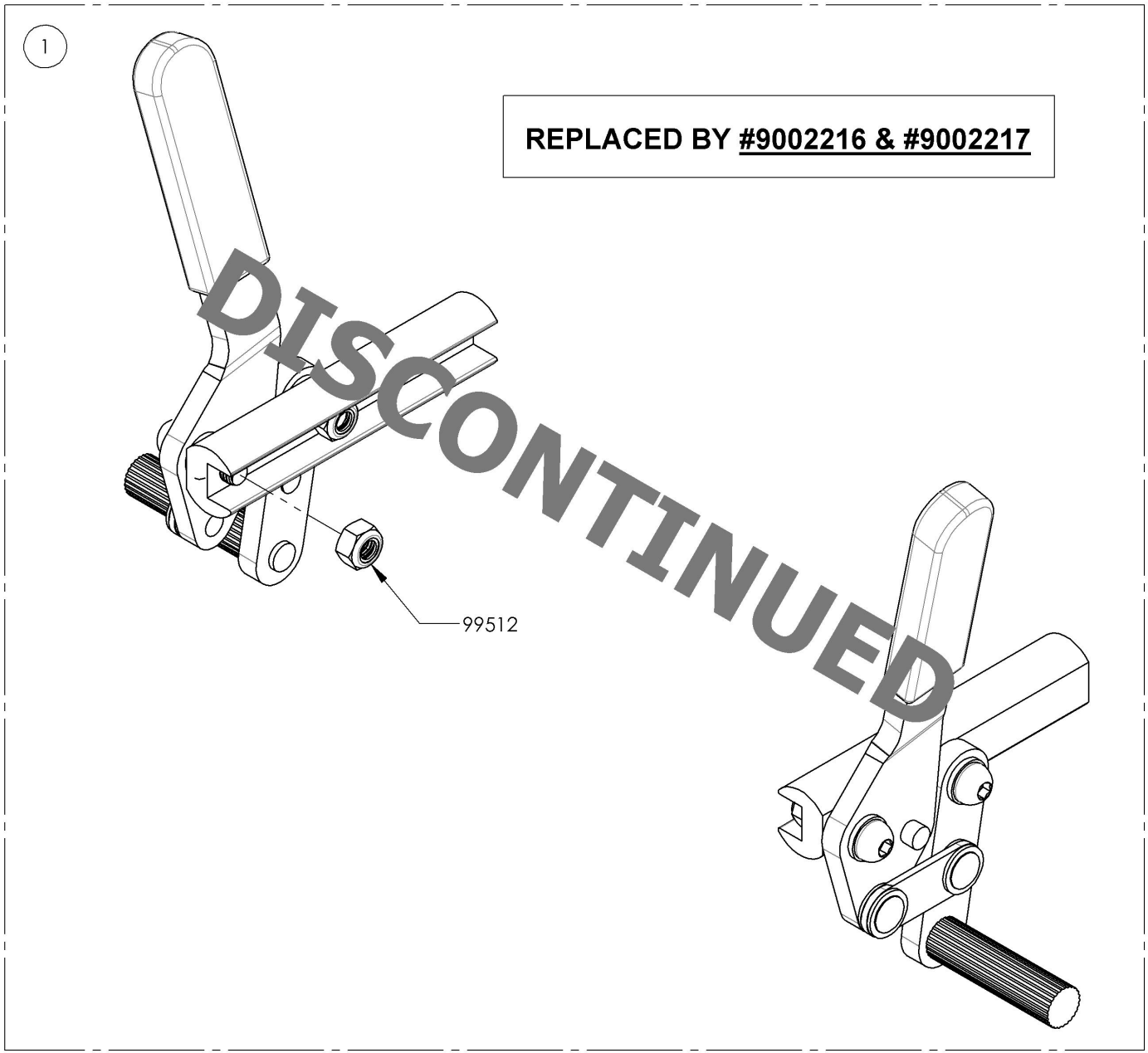

MAKE SURE TO HAVE YOUR SERIAL NUMBER NEARBY WHEN ORDERING PARTS FOR YOUR MOTION COMPOSITES WHEELCHAIR

9001575
Wheel Lock - Push to Lock, 6 in Removable Extension Handle

ITEM NO.	PARTNO	DESCRIPTION	9001575 /QTY.	REPLACEMENT PARTS/QTY.
1	41013	WHEEL LOCK PUSH RIGHT & LEFT (PAIR)	1	-
2	41005	REMOVABLE EXTENSION HANDLE	-	1

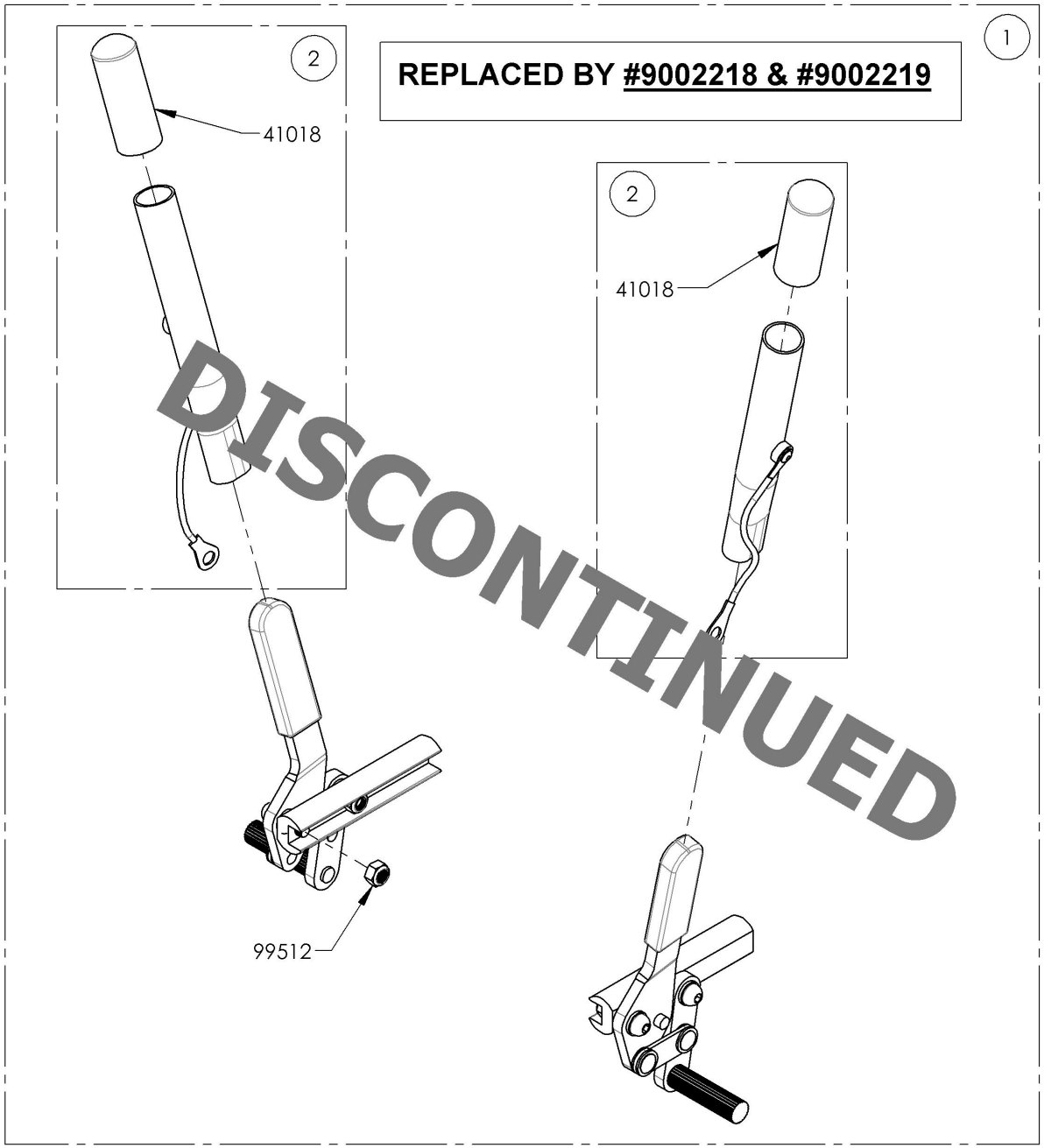

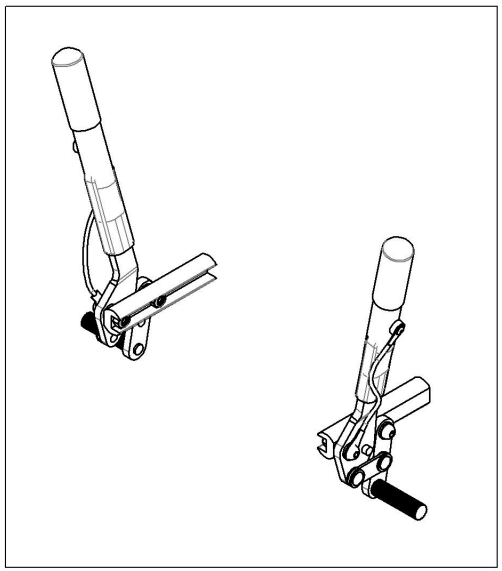

MAKE SURE TO HAVE YOUR SERIAL NUMBER NEARBY WHEN ORDERING PARTS FOR YOUR MOTION COMPOSITES WHEELCHAIR

Wheel Locks Catalogue
Wheel Lock - Push & Pull with Extended Rail

ITEM NO.	PARTNO	DESCRIPTION	QTY.
1	9003025	Wheel Lock - Newton Spring Loaded Push to Lock, Extended Rail, Right	1
2	9003026	Wheel Lock - Newton Spring Loaded Push to Lock, Extended Rail, Left	1
3	9003027	Wheel Lock - Newton Spring Loaded Push to Lock, Extended Rail, 6 in Removable Extension Handle, Right	1
4	9003028	Wheel Lock - Newton Spring Loaded Push to Lock, Extended Rail, 6 in Removable Extension Handle, Left	1
5	9003628	Wheel Lock - Pull to Lock, Extended Rail, Right	1
6	9003629	Wheel Lock - Pull to Lock, Extended Rail, Left	1
7	9003630	Wheel Lock - Pull to Lock, Extended Rail, 6 in Removable Extension Handle, Right	1
8	9003631	Wheel Lock - Pull to Lock, Extended Rail, 6 in Removable Extension Handle, Left	1

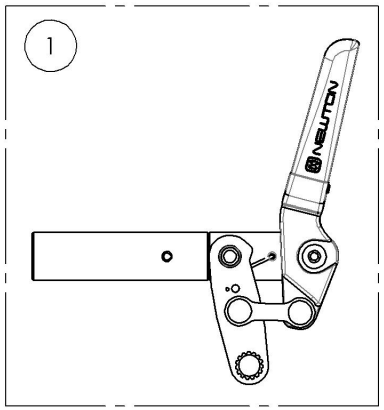

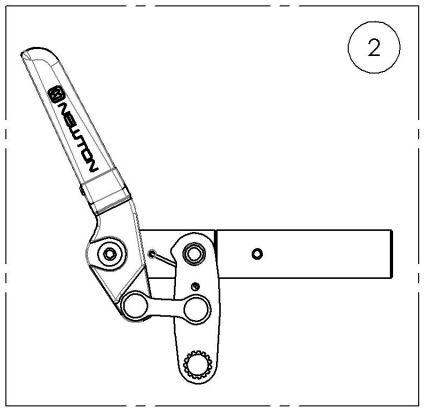

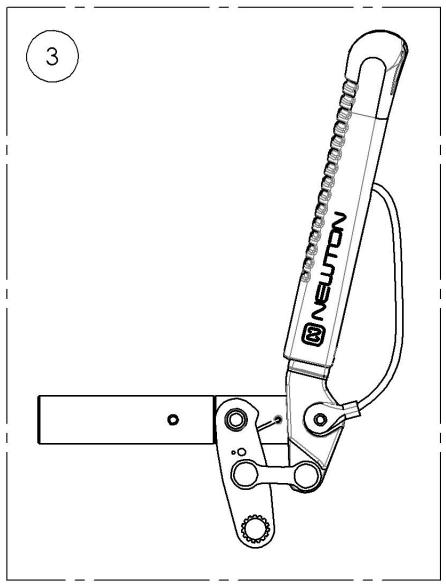

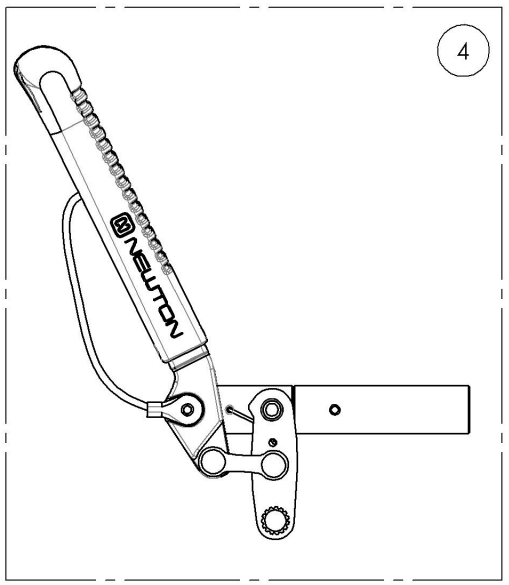

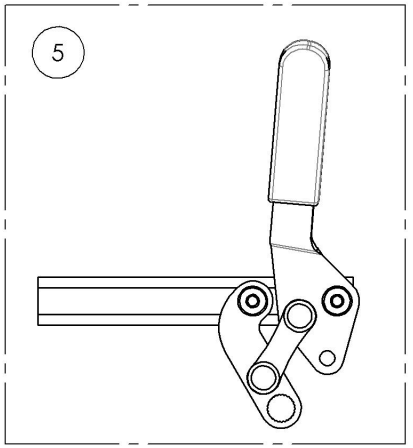

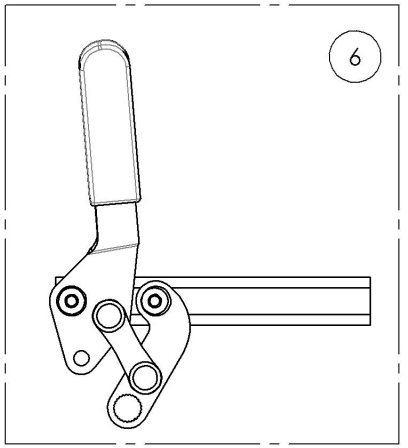

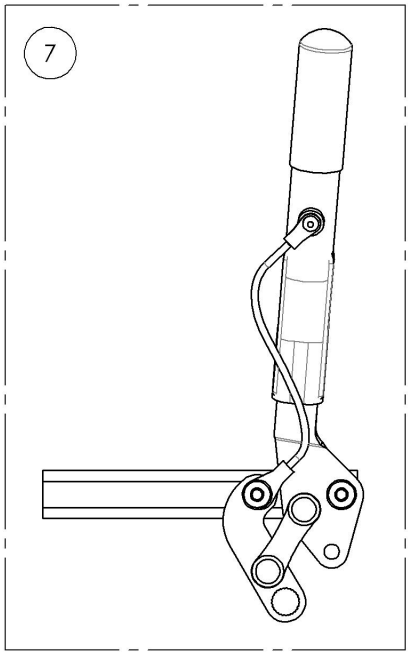

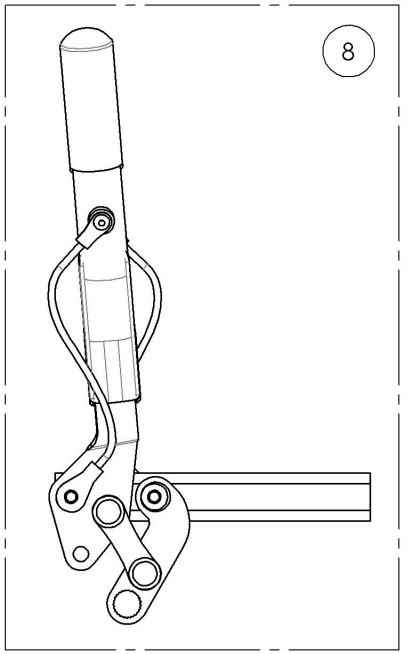

MAKE SURE TO HAVE YOUR SERIAL NUMBER NEARBY WHEN ORDERING PARTS FOR YOUR MOTION COMPOSITES WHEELCHAIR

9003025_9003026
Wheel Lock - Newton Spring Loaded Push to Lock, Extended Rail

ITEM NO.	PARTNO	DESCRIPTION	9003025 /QTY.	9003026 /QTY.	REPLACEMENT PARTS/QTY.
1	41516	NEWTON PUSH SPRING WHEEL LOCK WITH EXTENDED RAIL, RIGHT - ASSEMBLY	1	-	-
2	41517	NEWTON PUSH SPRING WHEEL LOCK WITH EXTENDED RAIL, LEFT - ASSEMBLY	-	1	-
3	41072	EXTENDED WHEEL LOCK RAIL_PUSH TO LOCK	-	-	1

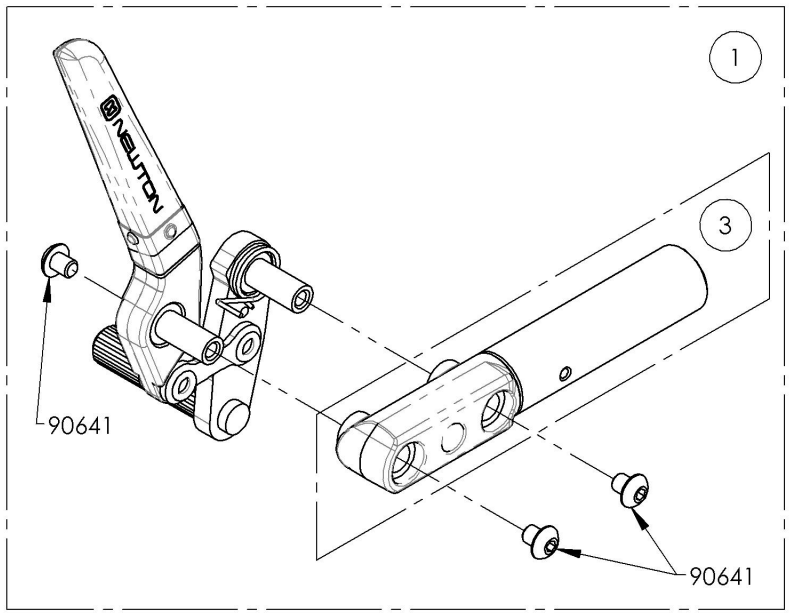

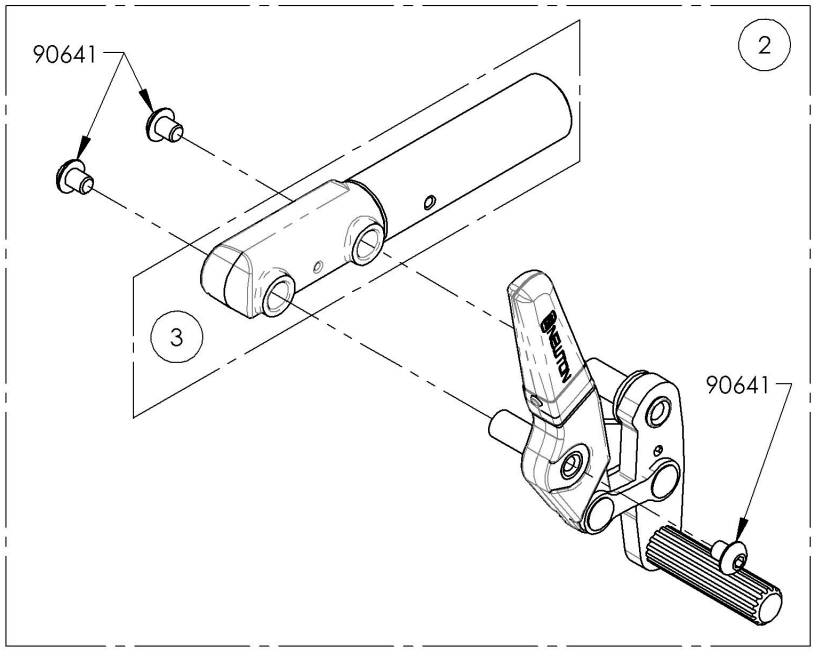

9003025
Wheel Lock - Newton Spring Loaded Push to Lock, Extended Rail, Right

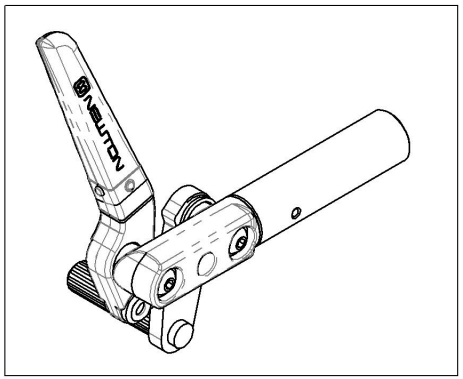

9003026
Wheel Lock - Newton Spring Loaded Push to Lock, Extended Rail, Left

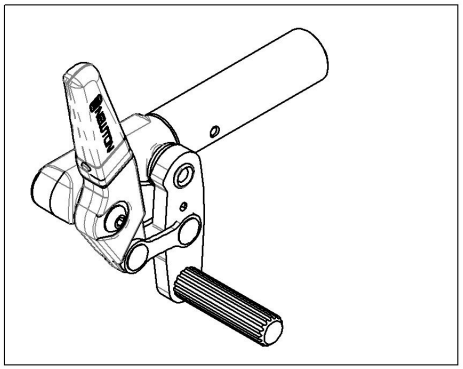

MAKE SURE TO HAVE YOUR SERIAL NUMBER NEARBY WHEN ORDERING PARTS FOR YOUR MOTION COMPOSITES WHEELCHAIR

9003027_9003028
Wheel Lock - Newton Spring Loaded Push to Lock, Extended Rail, 6 in Removable Extension Handle

ITEM NO.	PARTNO	DESCRIPTION	9003027 /QTY.	9003028 /QTY.	REPLACEMENT PARTS/QTY.
1	41076	NEWTON PUSH SPRING WHEEL LOCK WITH EXTENSION + EXTENDED RAIL, RIGHT - ASSEMBLY	1	-	-
2	41077	NEWTON PUSH SPRING WHEEL LOCK WITH EXTENSION + EXTENDED RAIL, LEFT - ASSEMBLY	-	1	-
3	41500	NEWTON REMOVABLE EXTENSION HANDLE - ASSEMBLY	-	-	1
4	41072	EXTENDED WHEEL LOCK RAIL_PUSH TO LOCK	-	-	1

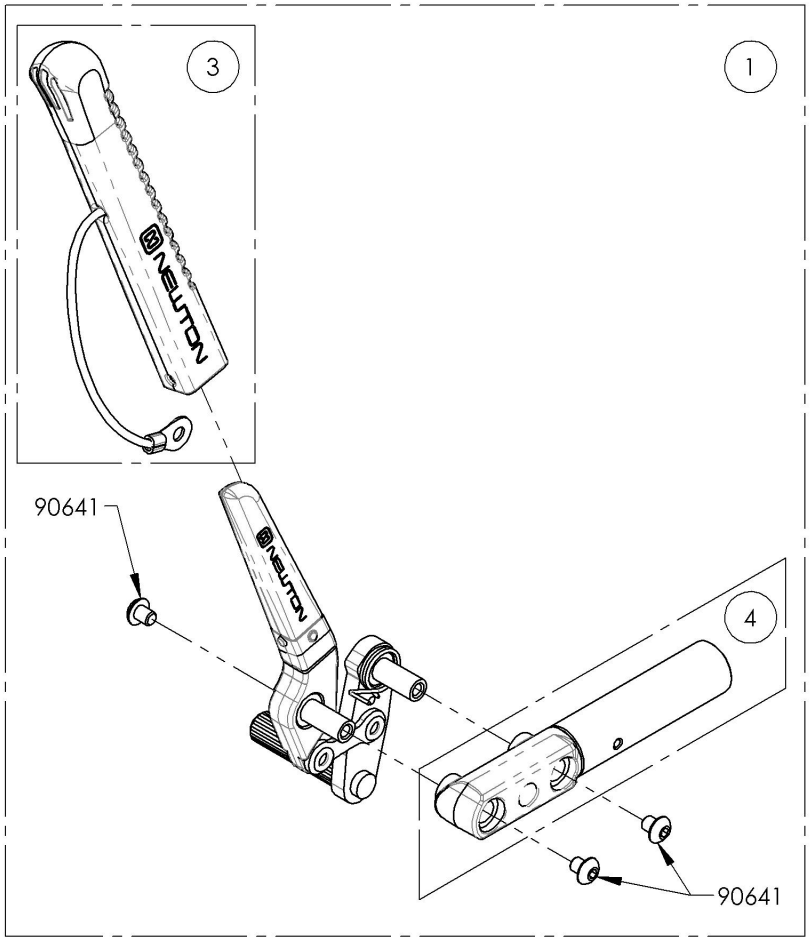

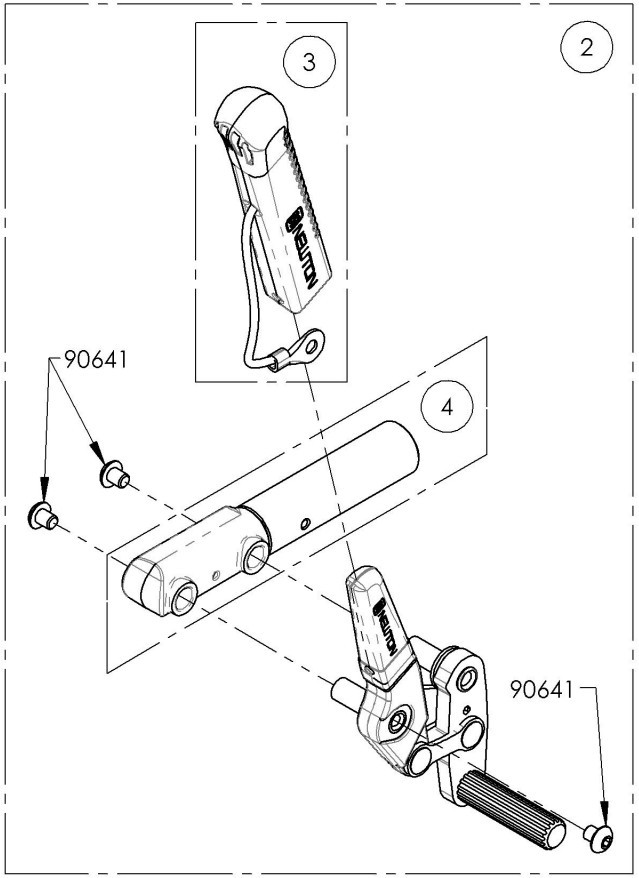

9003027
Wheel Lock - Newton Spring Loaded Push to Lock, Extended Rail, 6 in Removable Extension Handle, Right

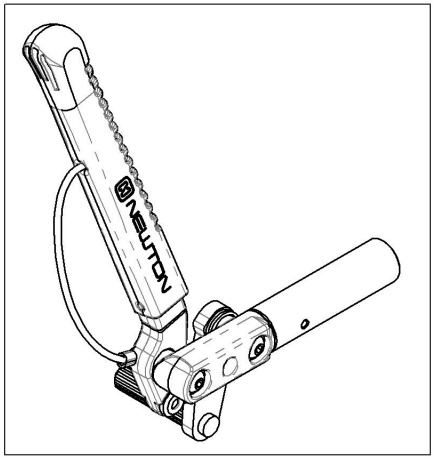

9003028
Wheel Lock - Newton Spring Loaded Push to Lock, Extended Rail, 6 in Removable Extension Handle, Left

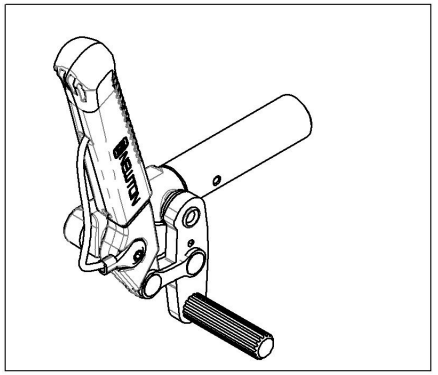

MAKE SURE TO HAVE YOUR SERIAL NUMBER NEARBY WHEN ORDERING PARTS FOR YOUR MOTION COMPOSITES WHEELCHAIR

9003628_9003629
Wheel Lock - Pull to Lock, Extended Rail

ITEM NO.	PARTNO	DESCRIPTION	9003628 /QTY.	9003629 /QTY.
1	41714	PULL TO LOCK WHEEL LOCK + EXTENSION RAIL, RIGHT	1	-
2	41715	PULL TO LOCK WHEEL LOCK + EXTENSION RAIL, LEFT	-	1

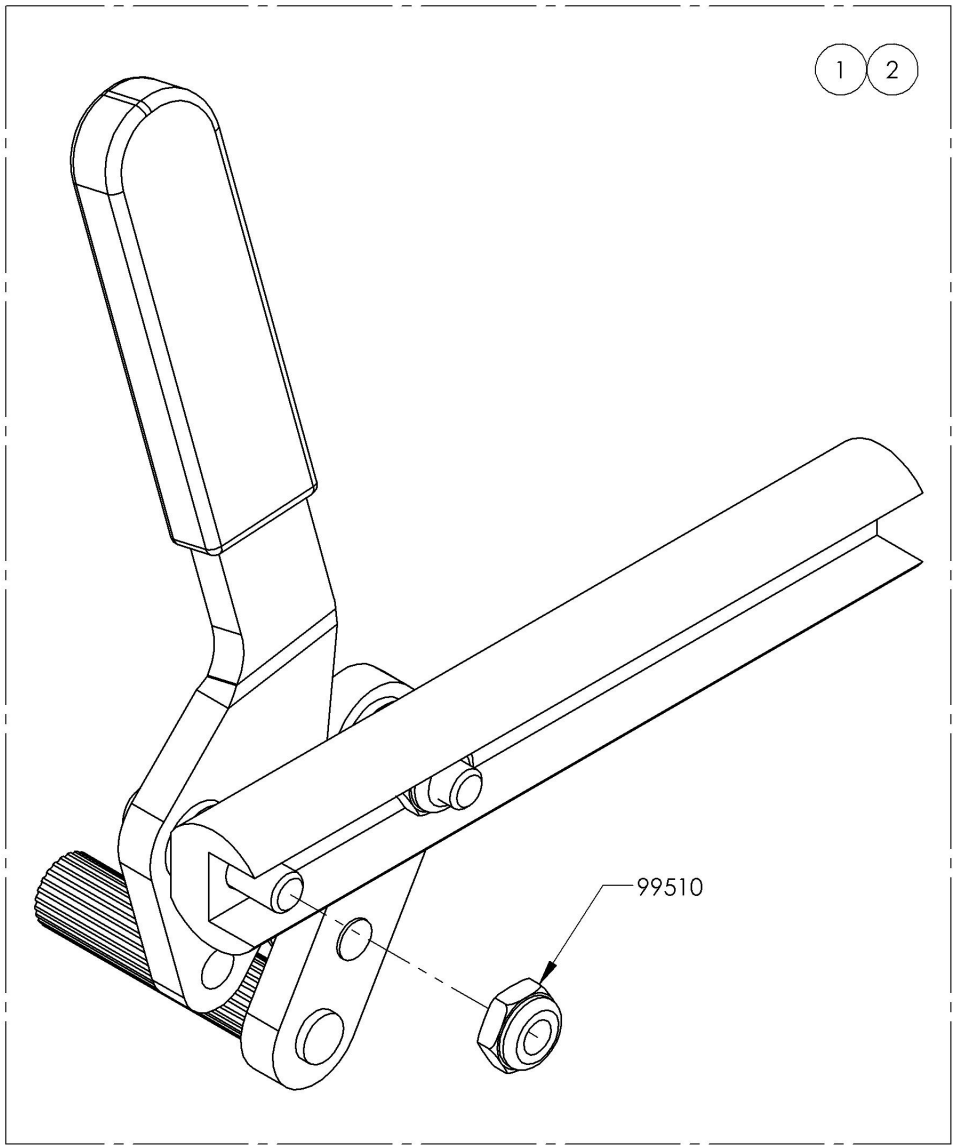

Default
Wheel Lock - Pull to Lock, Extended Rail, Right

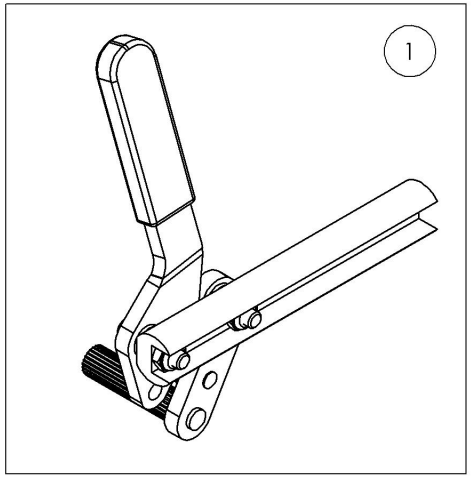

Default
Wheel Lock - Pull to Lock, Extended Rail, Left

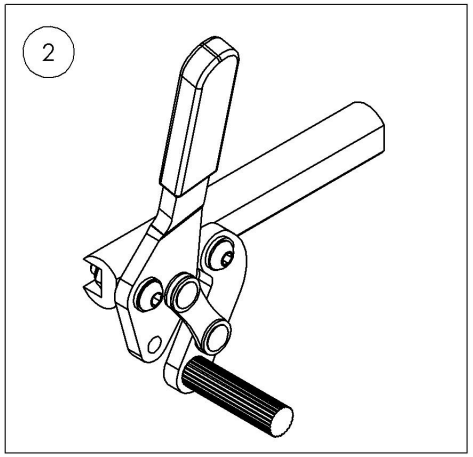

MAKE SURE TO HAVE YOUR SERIAL NUMBER NEARBY WHEN ORDERING PARTS FOR YOUR MOTION COMPOSITES WHEELCHAIR

9003630_9003631
Wheel Lock - Pull to Lock, Extended Rail, 6 in Removable Extension Handle

ITEM NO.	PARTNO	DESCRIPTION	9003630 /QTY.	9003631 /QTY.	REPLACEMENT PARTS/QTY.
1	41712	PULL TO LOCK WHEEL LOCK + HANDLE & EXTENSION RAIL, RIGHT	1	-	-
2	41713	PULL TO LOCK WHEEL LOCK + HANDLE & EXTENSION RAIL, LEFT	-	1	-
3	41005	REMOVABLE EXTENSION HANDLE	-	-	1

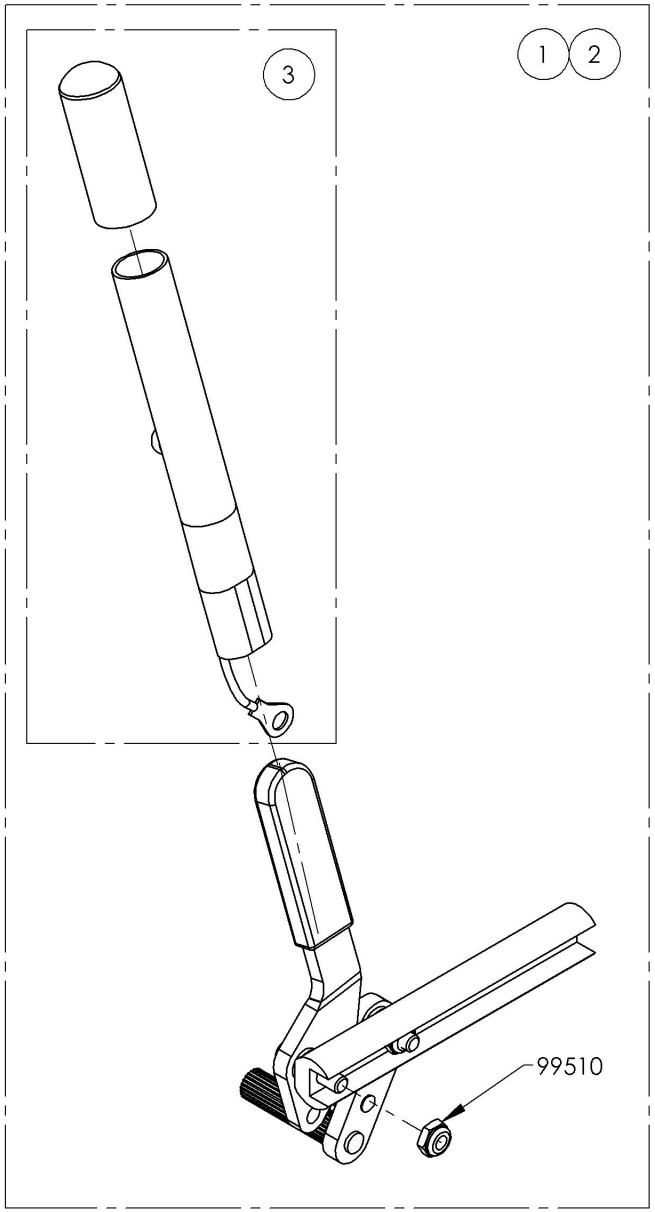

Default
Wheel Lock - Pull to Lock, Extended Rail,
6 in Removable Extension Handle, Right

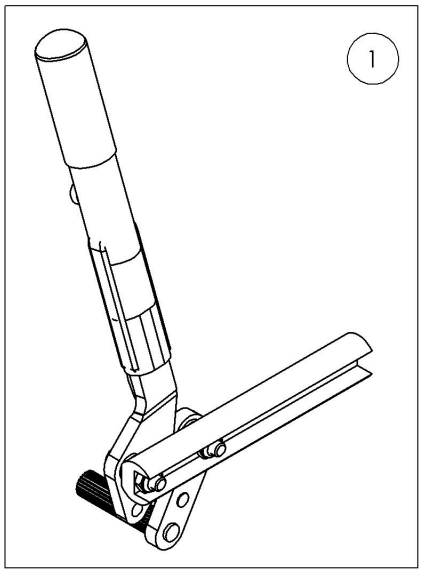

Default
Wheel Lock - Pull to Lock, Extended Rail,
6 in Removable Extension Handle, Left

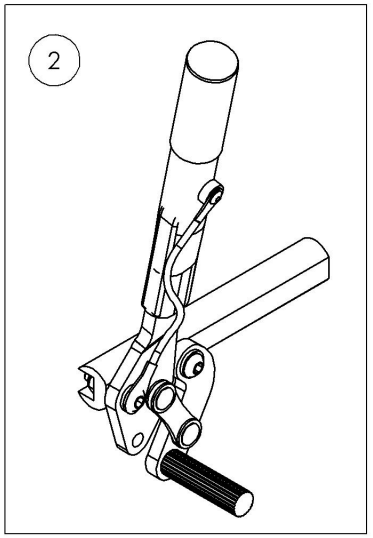

MAKE SURE TO HAVE YOUR SERIAL NUMBER NEARBY WHEN ORDERING PARTS FOR YOUR MOTION COMPOSITES WHEELCHAIR

Wheel Locks Catalogue
Wheel Lock - Scissor

ITEM NO.	PARTNO	DESCRIPTION	QTY.
1	9001585	Wheel Lock - Scissor, Right	1
2	9001586	Wheel Lock - Scissor, Left	1

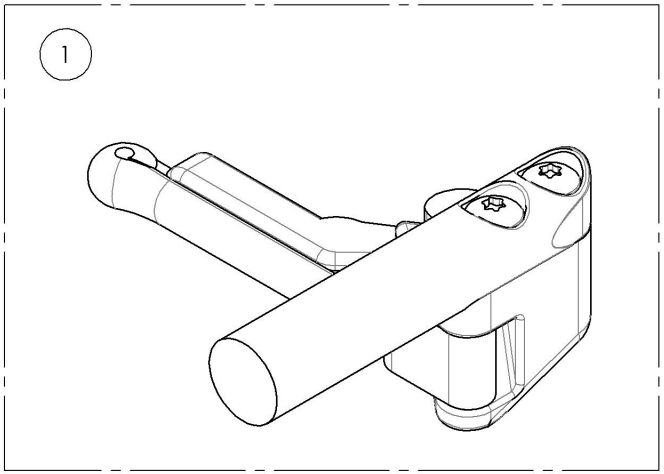

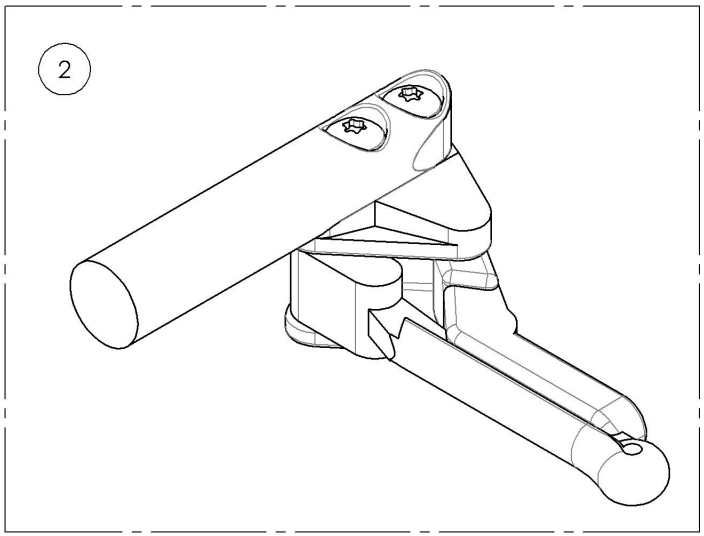

MAKE SURE TO HAVE YOUR SERIAL NUMBER NEARBY WHEN ORDERING PARTS FOR YOUR MOTION COMPOSITES WHEELCHAIR

9001585_9001586
Wheel Lock - Scissor

ITEM NO.	PARTNO	DESCRIPTION	9001585 /QTY.	9001586 /QTY.
1	41039	OUT-FRONT SCISSOR WHEEL LOCK RIGHT	1	-
2	41038	OUT-FRONT SCISSOR WHEEL LOCK LEFT	-	1

9001585
Wheel Lock - Scissor, Right

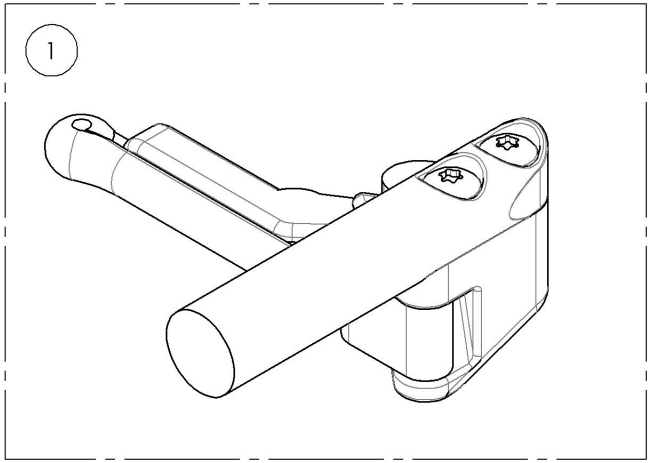

9001586
Wheel Lock - Scissor, Left

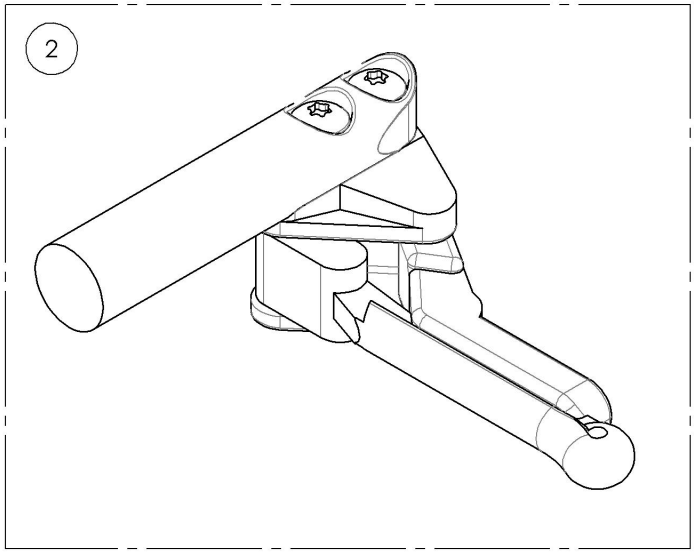

MAKE SURE TO HAVE YOUR SERIAL NUMBER NEARBY WHEN ORDERING PARTS FOR YOUR MOTION COMPOSITES WHEELCHAIR

Wheel Locks Catalogue
Wheel Lock - Grade Aid

ITEM NO.	PARTNO	DESCRIPTION	QTY.
1	9001581	Wheel Lock - Newton Grade Aid, Push to lock, Right	1
2	9001582	Wheel Lock - Newton Grade Aid, Push to lock, Left	1
3	9001583	Wheel Lock - Newton Grade Aid, Push to lock, 6 in Removable Extension Handle, Right	1
4	9001584	Wheel Lock - Newton Grade Aid, Push to lock, 6 in Removable Extension Handle, Left	1

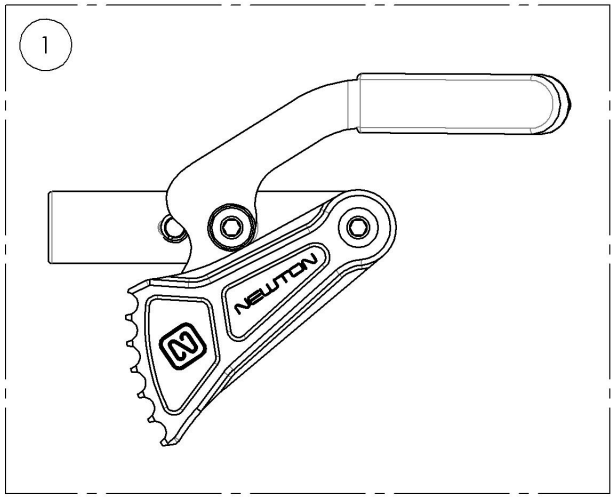

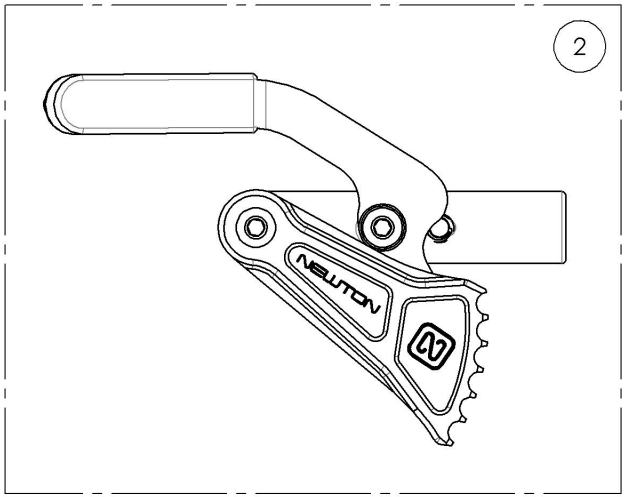

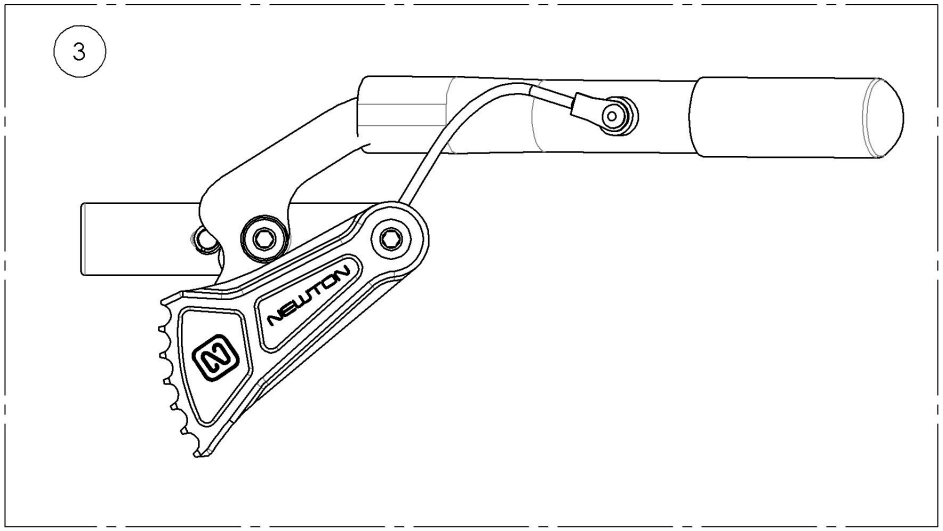

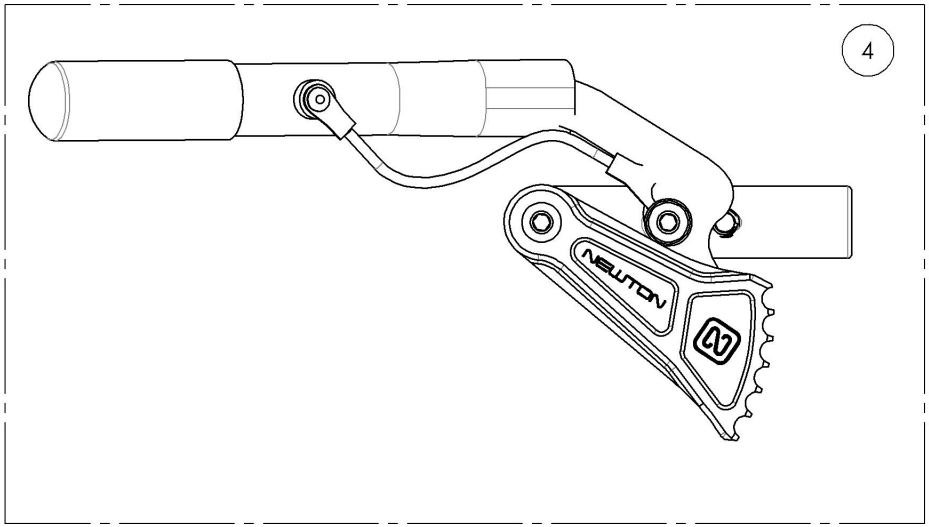

MAKE SURE TO HAVE YOUR SERIAL NUMBER NEARBY WHEN ORDERING PARTS FOR YOUR MOTION COMPOSITES WHEELCHAIR

9001581_9001582
Wheel Lock - Newton Grade Aid, Push to Lock

ITEM NO.	PARTNO	DESCRIPTION	9001581 /QTY.	9001582 /QTY.
1	41035	GRADE AID BRAKE RIGHT - ASSEMBLY	1	-
2	41036	GRADE AID BRAKE LEFT - ASSEMBLY	-	1

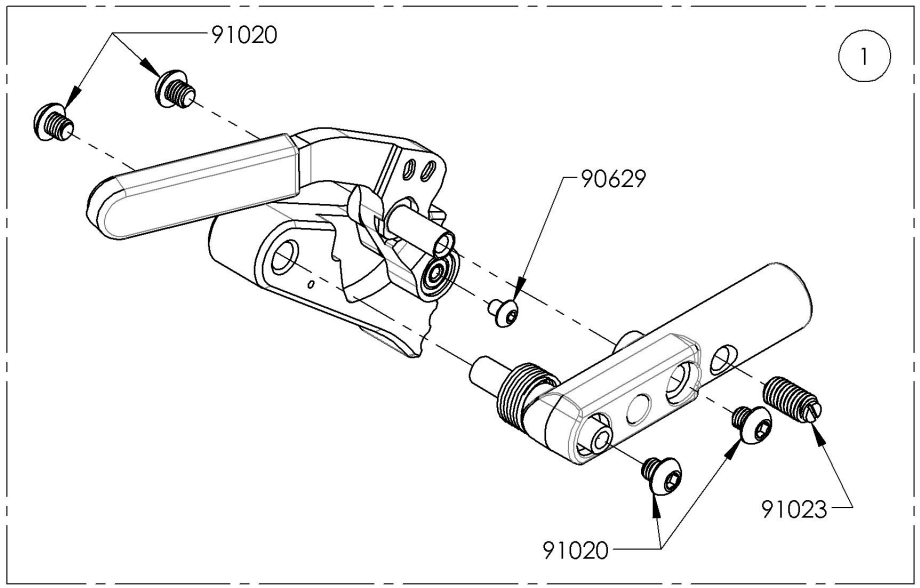

9001581
Wheel Lock - Newton Grade Aid,
Push to lock, Right

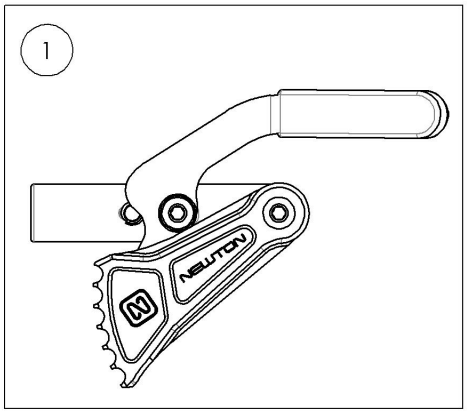

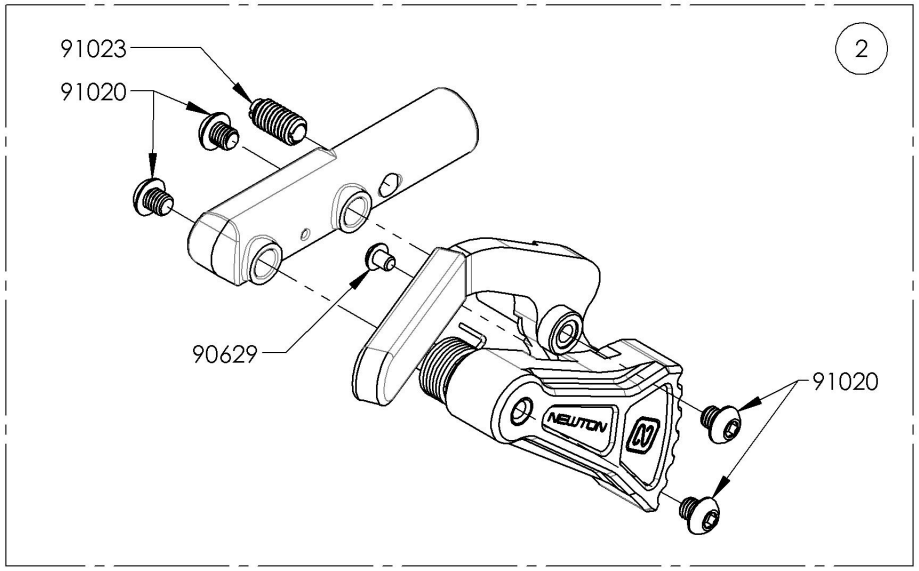

9001582
Wheel Lock - Newton Grade Aid,
Push to lock, Left

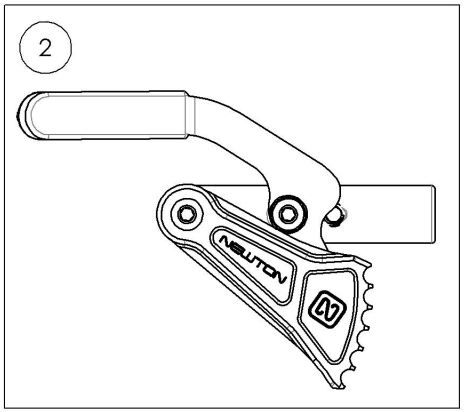

MAKE SURE TO HAVE YOUR SERIAL NUMBER NEARBY WHEN ORDERING PARTS FOR YOUR MOTION COMPOSITES WHEELCHAIR

9001583_9001584
Wheel Lock - Newton Grade Aid, Push to Lock, 6 in Removable Extension Handle

ITEM NO.	PARTNO	DESCRIPTION	9001583 /QTY.	9001584 /QTY.
1	41035	GRADE AID BRAKE RIGHT - ASSEMBLY	1	-
2	41036	GRADE AID BRAKE LEFT - ASSEMBLY	-	1
3	41005	REMOVABLE EXTENSION HANDLE	1	1

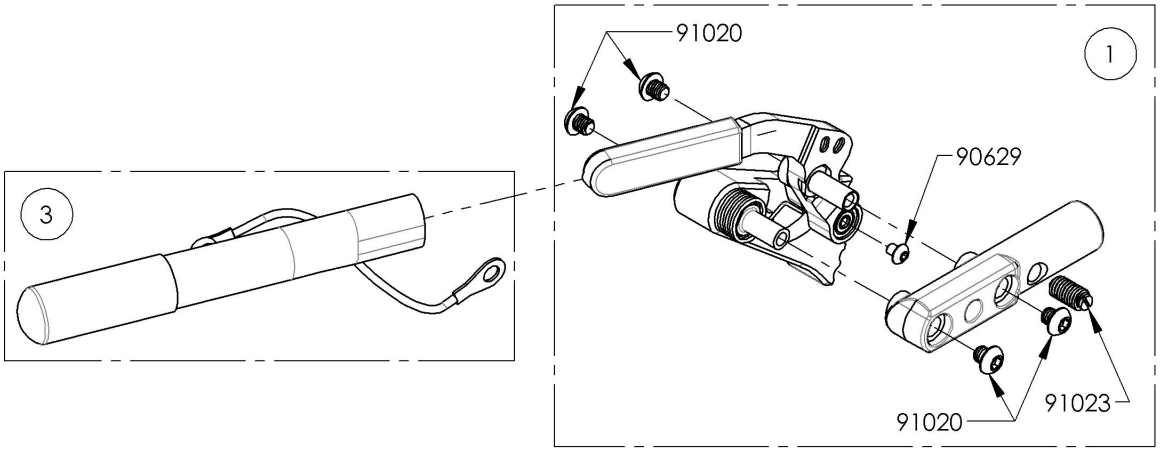

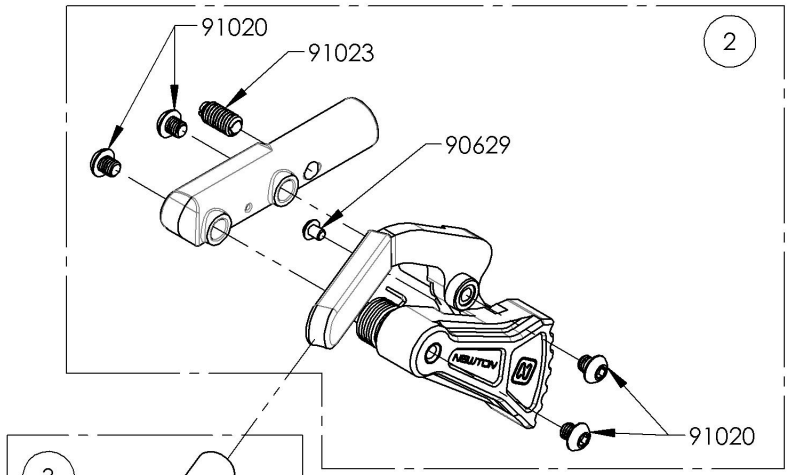

9001583
Wheel Lock - Newton Grade Aid, Push to lock, 6 in Removable Extension Handle, Right

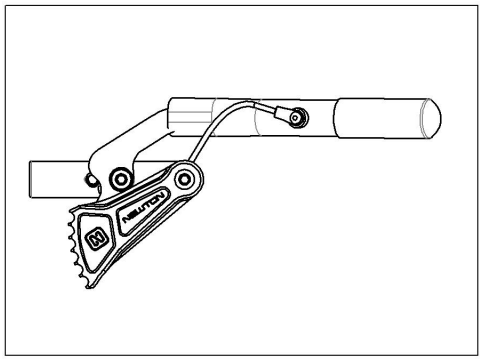

9001584
Wheel Lock - Newton Grade Aid, Push to lock, 6 in Removable Extension Handle, Left

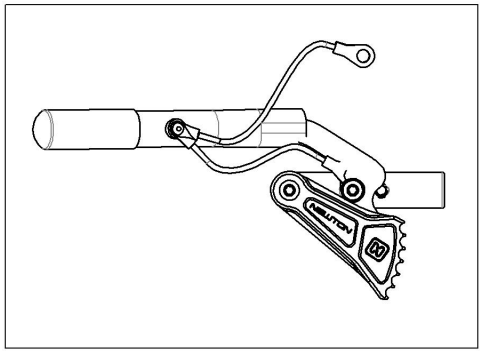

MAKE SURE TO HAVE YOUR SERIAL NUMBER NEARBY WHEN ORDERING PARTS FOR YOUR MOTION COMPOSITES WHEELCHAIR

Wheel Locks Catalogue
Wheel Lock - Grade Aid With Extended Rail

ITEM NO.	PARTNO	DESCRIPTION	QTY.
1	9003029	Wheel Lock - Newton Grade Aid, Push to Lock, Extended Rail, Right	1
2	9003030	Wheel Lock - Newton Grade Aid, Push to Lock, Extended Rail, Left	1
3	9003031	Wheel Lock - Newton Grade Aid, Push to Lock, Extended Rail, 6 in Removable Extension Handle, Right	1
4	9003032	Wheel Lock - Newton Grade Aid, Push to Lock, Extended Rail, 6 in Removable Extension Handle, Left	1

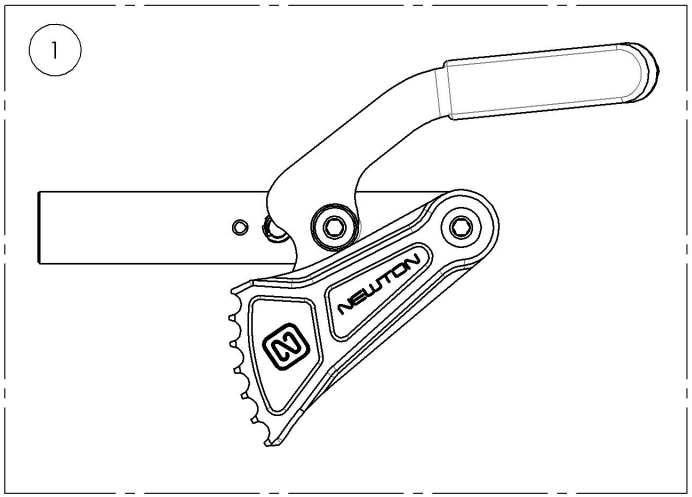

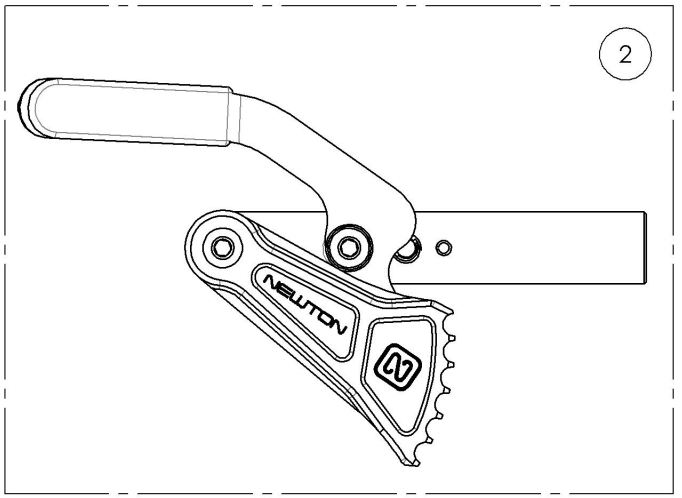

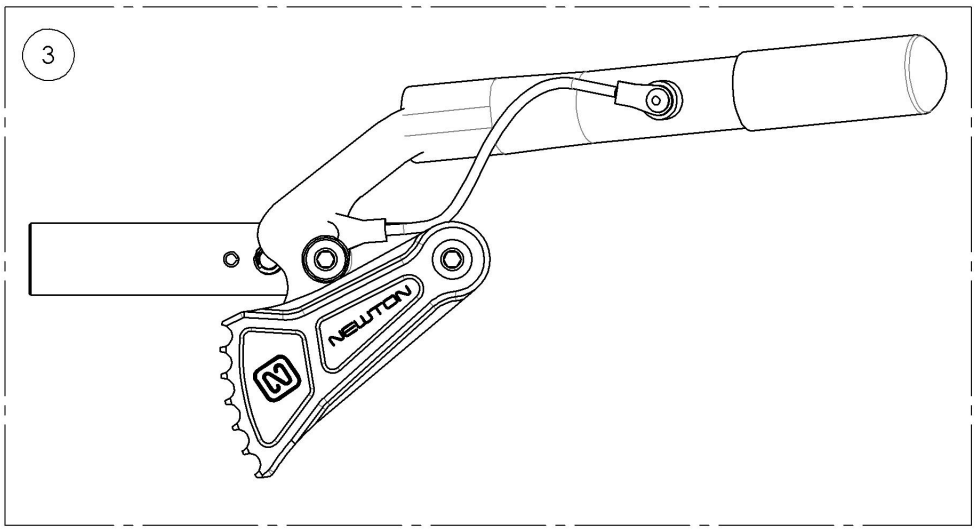

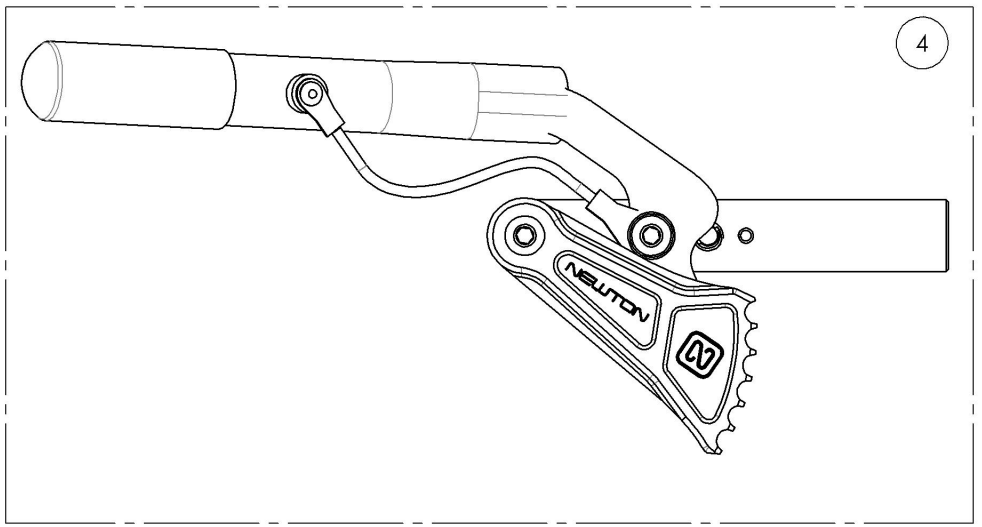

MAKE SURE TO HAVE YOUR SERIAL NUMBER NEARBY WHEN ORDERING PARTS FOR YOUR MOTION COMPOSITES WHEELCHAIR

9003029_9003030
Wheel Lock - Newton Grade Aid, Push to Lock, Extended Rail

ITEM NO.	PART NO.	DESCRIPTION	9003029 /QTY.	9003030 /QTY.	REPLACEMENT PARTS/QTY.
1	41514	NEWTON GRADE AID WHEEL LOCK WITH EXTENDED RAIL, RIGHT - ASSEMBLY	1	-	-
2	41515	NEWTON GRADE AID WHEEL LOCK WITH EXTENDED RAIL, LEFT - ASSEMBLY	-	1	-
3	41075	EXTENDED WHEEL LOCK RAIL_GRADE AID	-	-	1

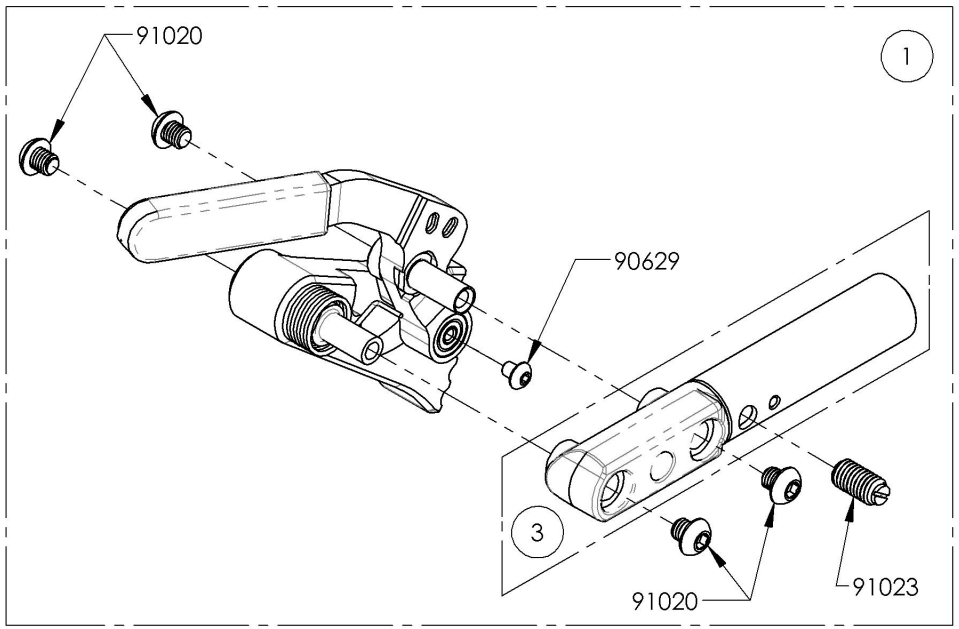

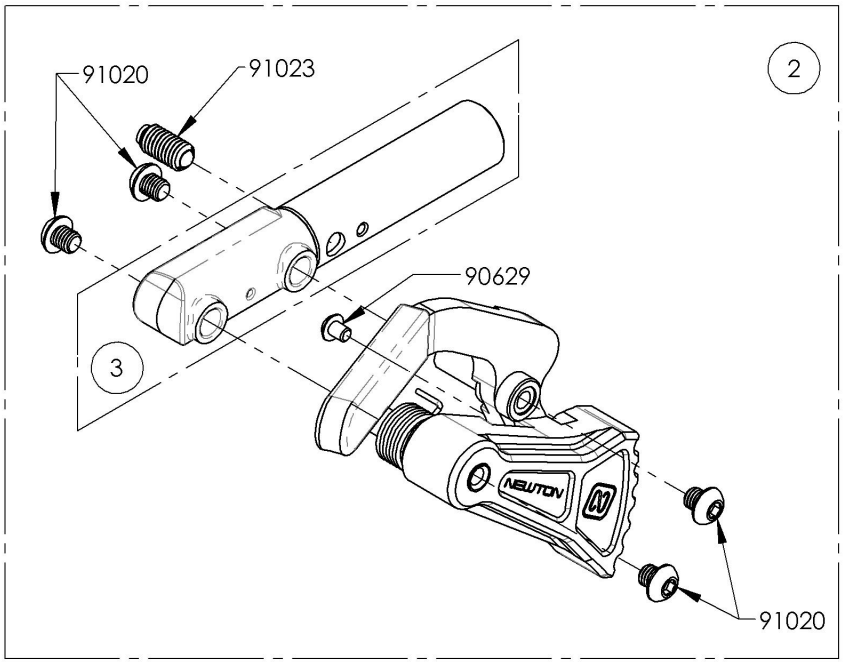

9003029
Wheel Lock - Newton Grade Aid,
Push to Lock, Extended Rail, Right

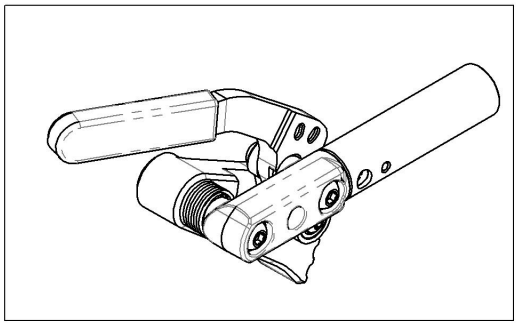

9003030
Wheel Lock - Newton Grade Aid,
Push to Lock, Extended Rail, Left

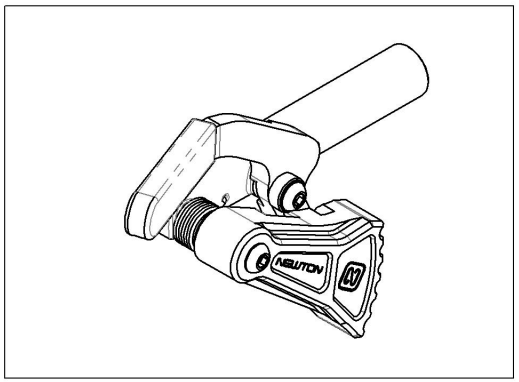

MAKE SURE TO HAVE YOUR SERIAL NUMBER NEARBY WHEN ORDERING PARTS FOR YOUR MOTION COMPOSITES WHEELCHAIR

9003031_9003032
Wheel Lock - Newton Grade Aid, Push to Lock, Extended Rail, 6 in Removable Extension Handle, Right

ITEM NO.	PARTNO	DESCRIPTION	9003031 /QTY.	9003032 /QTY.	REPLACEMENT PARTS/QTY.
1	41514	NEWTON GRADE AID WHEEL LOCK WITH EXTENDED RAIL, RIGHT - ASSEMBLY	1	-	-
2	41515	NEWTON GRADE AID WHEEL LOCK WITH EXTENDED RAIL, LEFT - ASSEMBLY	-	1	-
3	41005	REMOVABLE EXTENSION HANDLE	1	1	-
4	41075	EXTENDED WHEEL LOCK RAIL_GRADE AID	-	-	1

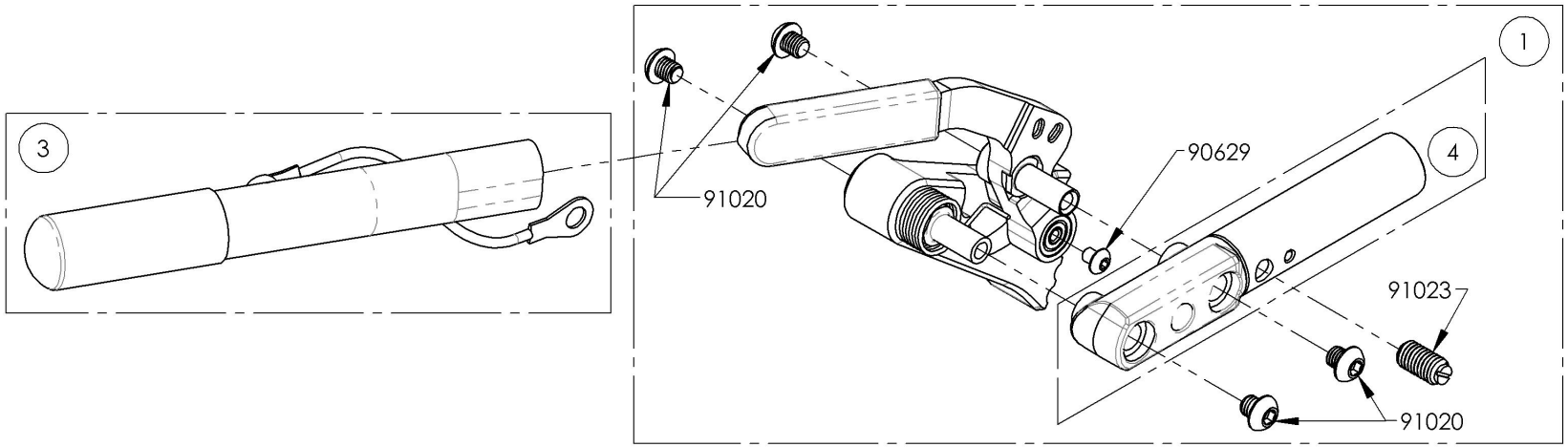

9003031
Wheel Lock - Newton Grade Aid, Push to Lock, Extended Rail, 6 in Removable Extension Handle, Right

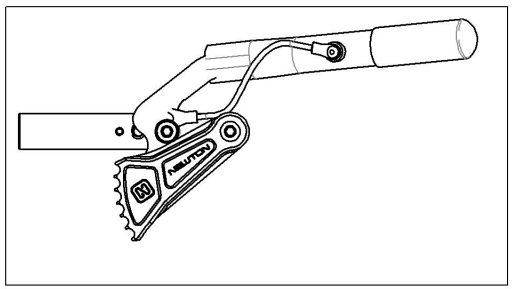

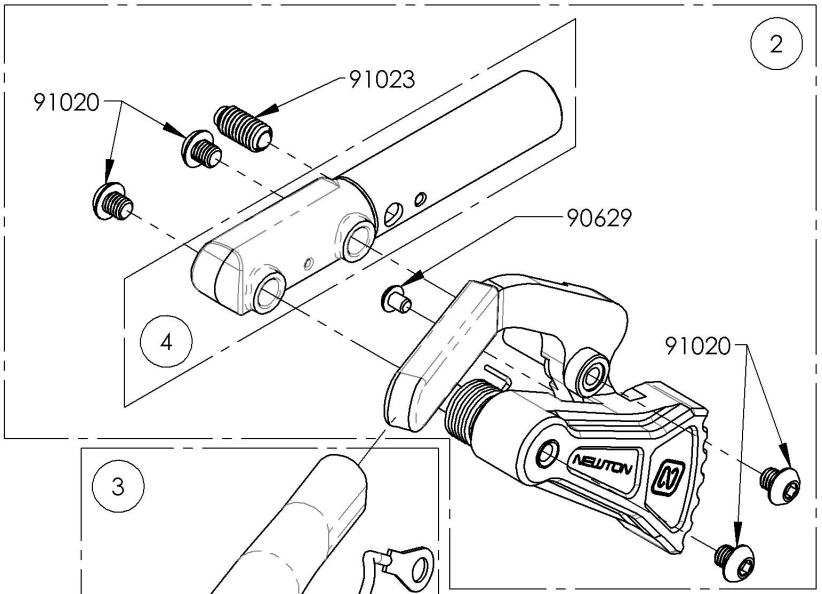

9003032
Wheel Lock - Newton Grade Aid, Push to Lock, Extended Rail, 6 in Removable Extension Handle, Left

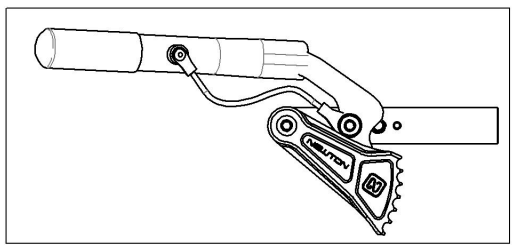

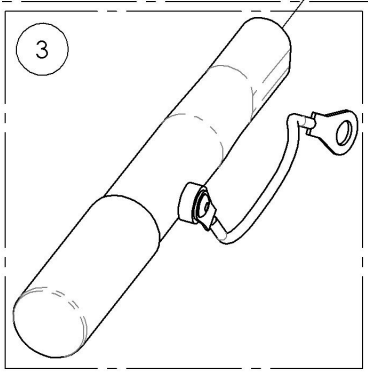

MAKE SURE TO HAVE YOUR SERIAL NUMBER NEARBY WHEN ORDERING PARTS FOR YOUR MOTION COMPOSITES WHEELCHAIR

Wheel Locks Catalogue
Wheel Lock - Clamps

ITEM NO.	PARTNO	DESCRIPTION	QTY.
1	9001211	Wheel lock - Two Part Clamp	1
2	9001212	Wheel lock - Ultralight One Part Clamp	1

FOR ALUMINUM FRAME

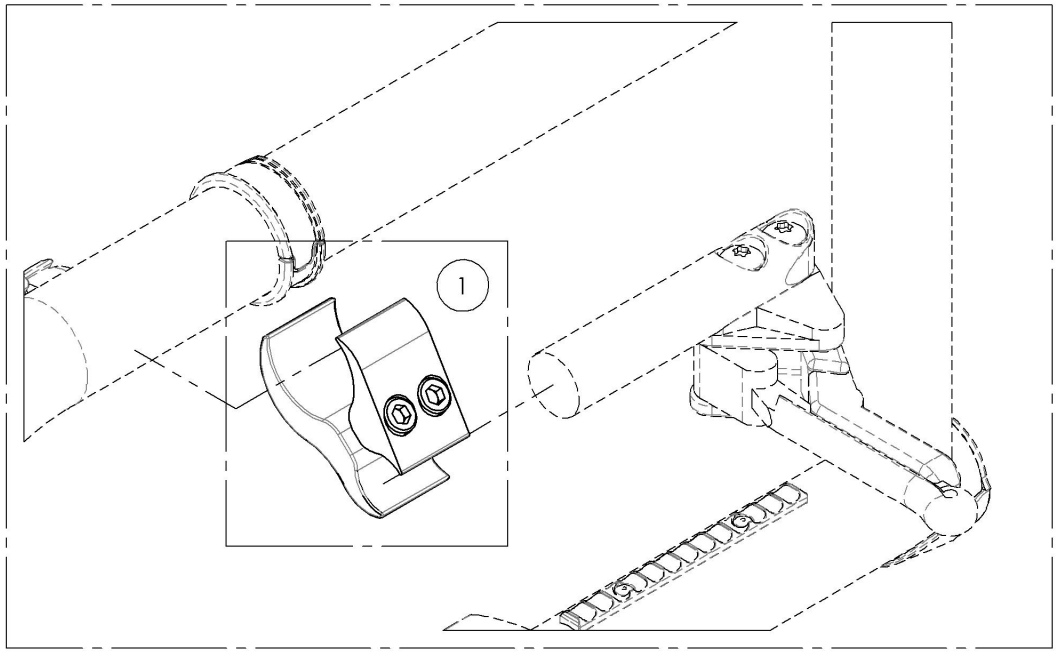

FOR CARBON FRAME

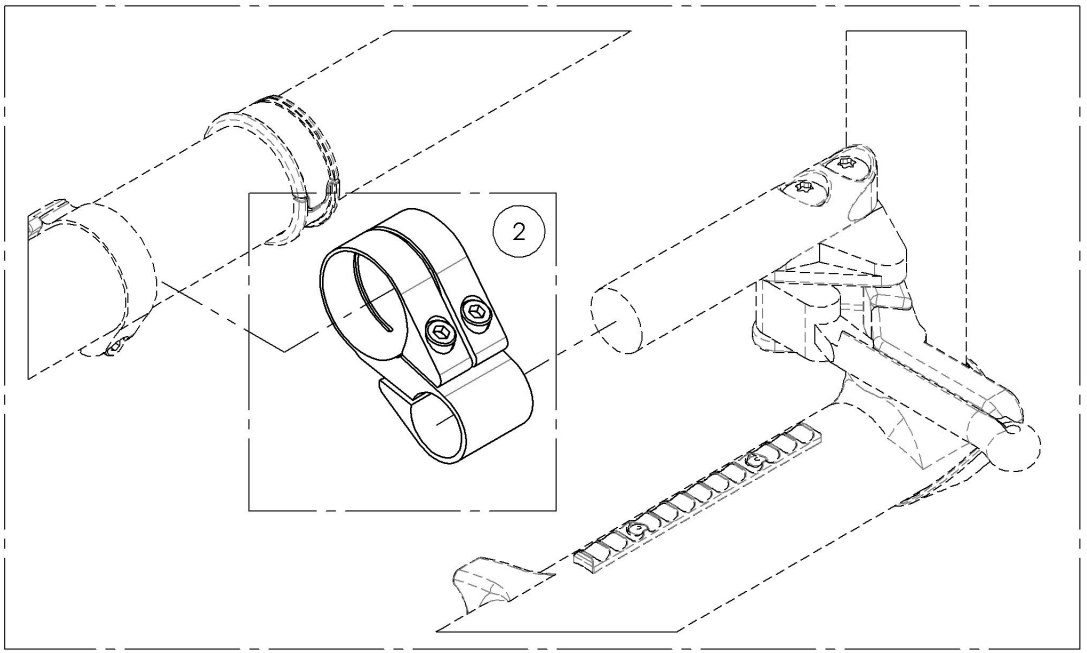

MAKE SURE TO HAVE YOUR SERIAL NUMBER NEARBY WHEN ORDERING PARTS FOR YOUR MOTION COMPOSITES WHEELCHAIR

9001212
Wheel lock - Ultralight One Part Clamp

ITEM NO.	PARTNO	DESCRIPTION	9001212 /QTY.
1	41017	V2 BRAKE CLAMP	1
2	90752	SOCKET CAP SCREW M5X0.8 X 30mm LONG, 22mm THREADED + BLUE TREADLOCKER - BLACK ZINC	2

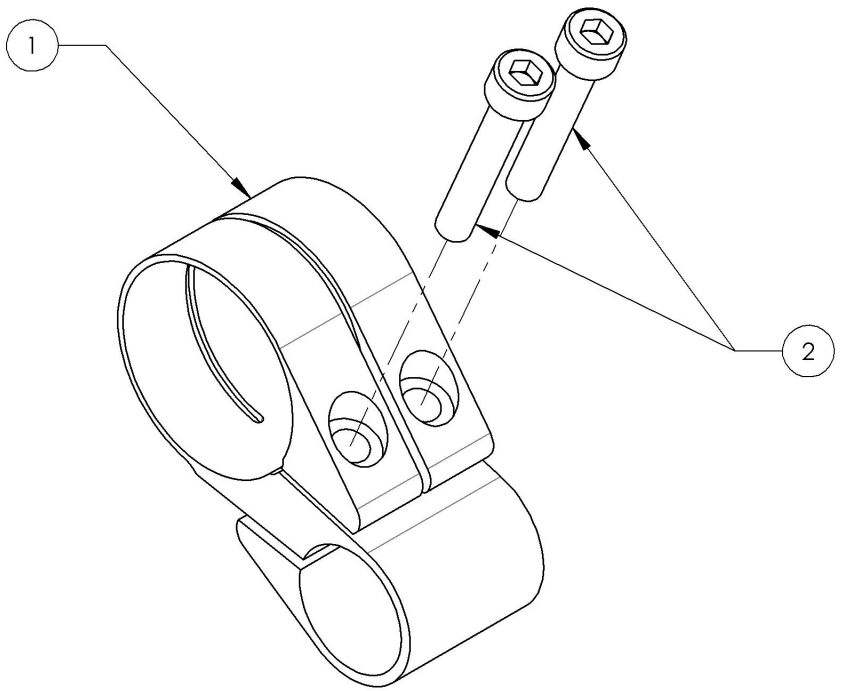

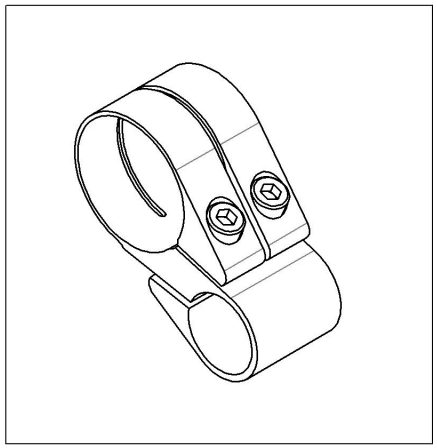

MAKE SURE TO HAVE YOUR SERIAL NUMBER NEARBY WHEN ORDERING PARTS FOR YOUR MOTION COMPOSITES WHEELCHAIR

Wheel Locks Catalogue
Unilateral Wheel Lock Adaptor Kit

ITEM NO.	PARTNO	DESCRIPTION	QTY
1	9002850	Unilateral Wheel Lock Adaptor Kit	1

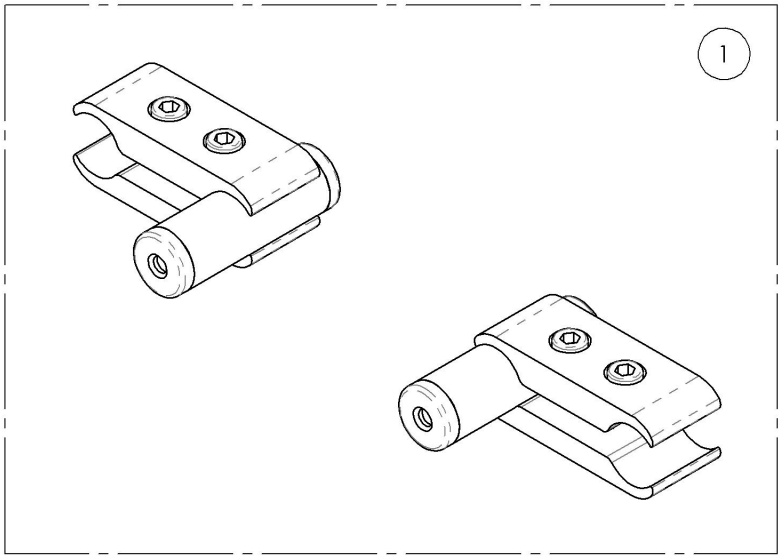

SEE #9001211 FOR ALUMINUM FRAME CLAMP

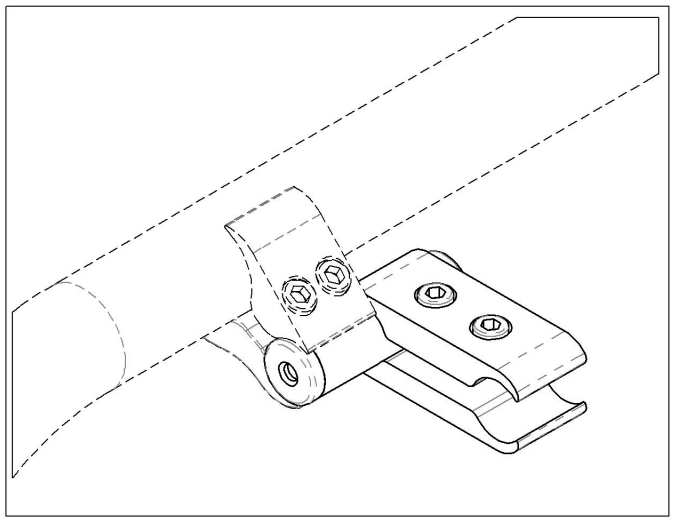

SEE #9001212 FOR CARBON FRAME CLAMP

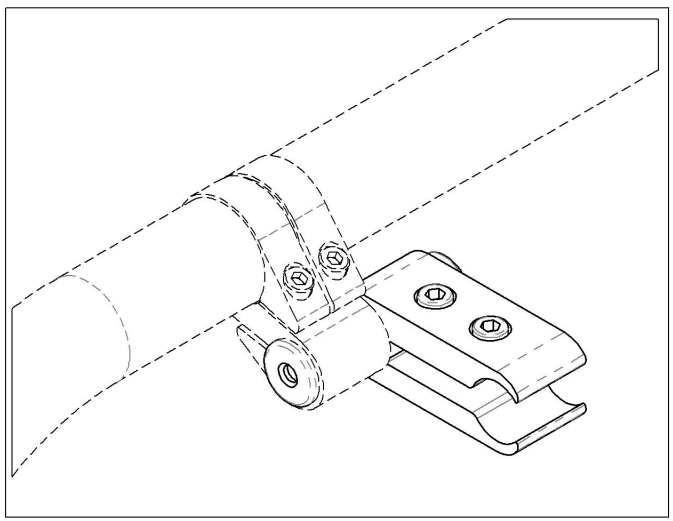

MAKE SURE TO HAVE YOUR SERIAL NUMBER NEARBY WHEN ORDERING PARTS FOR YOUR MOTION COMPOSITES WHEELCHAIR

9002850
Unilateral Wheel Lock Adaptor Kit

ITEM NO.	PARTNO	DESCRIPTION	QTY.
1	41502	0.75-0.75in CLAMP - ASSEMBLY	2
2	41009	¾ TUBE SPACER - 2 in	2
3	99701	PLASTIC PLUGS	4

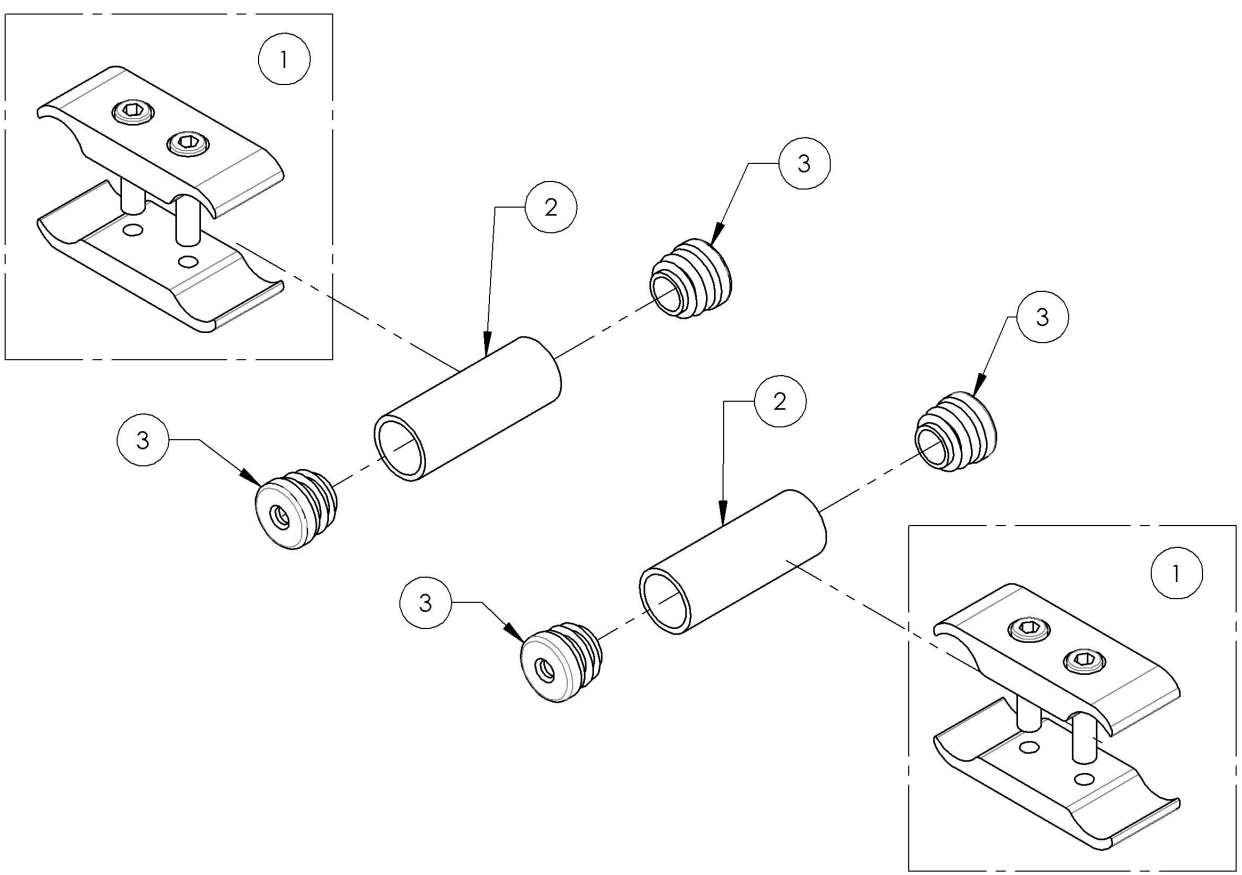

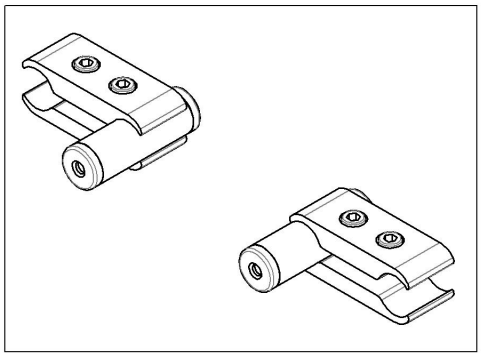

MAKE SURE TO HAVE YOUR SERIAL NUMBER NEARBY WHEN ORDERING PARTS FOR YOUR MOTION COMPOSITES WHEELCHAIR

Wheel Locks Catalogue
Footrest Stopper

ITEM NO.	PARTNO	DESCRIPTION	QTY
1	9003048	Wheel Lock - Footrest Stopper	2

TYPE 1 FRAME STOPPER INSTALLATION

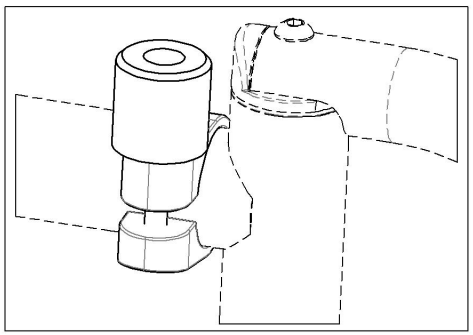

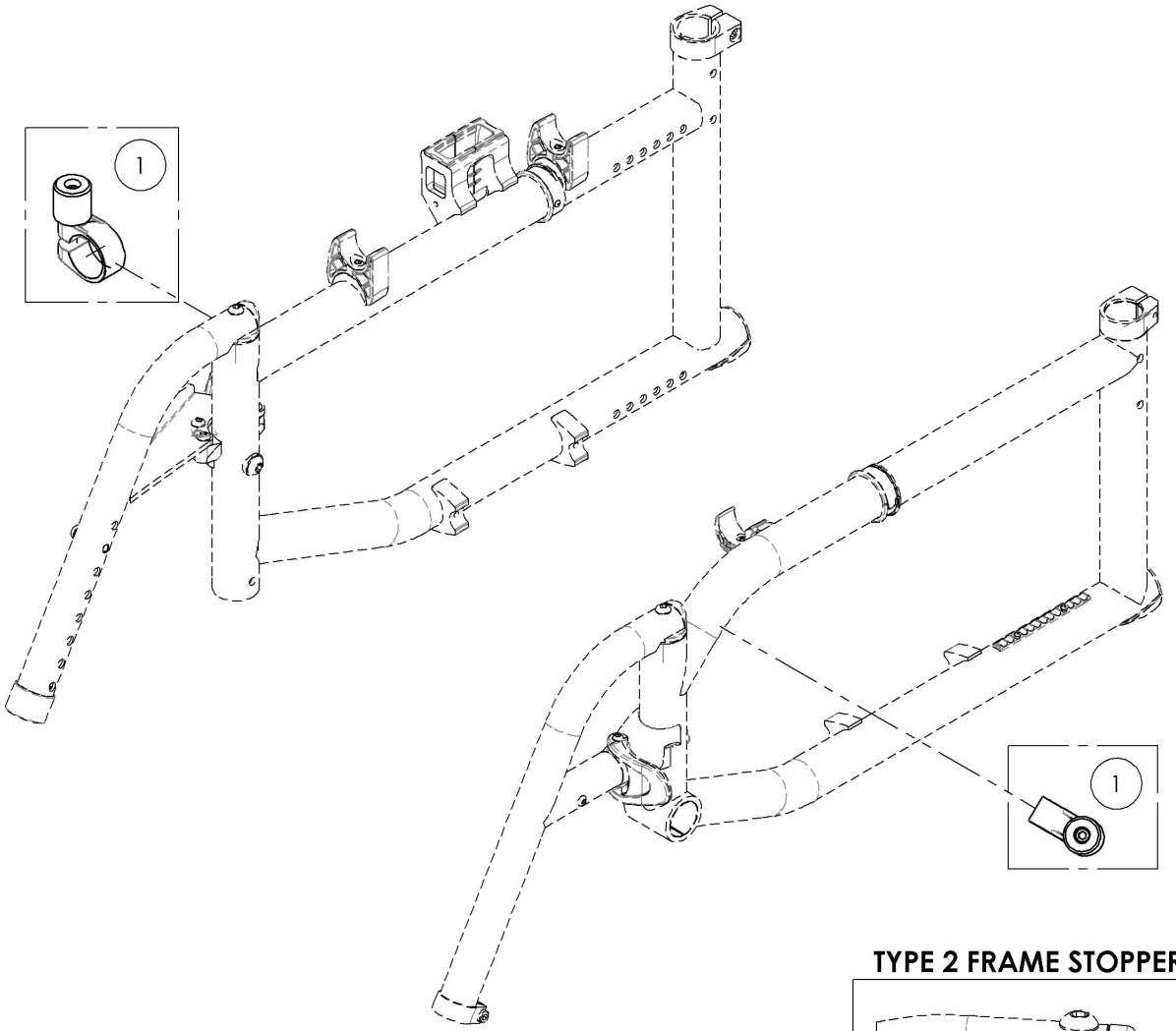

TYPE 2 FRAME STOPPER INSTALLATION

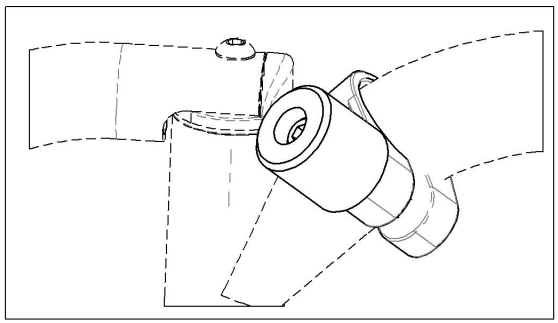

MAKE SURE TO HAVE YOUR SERIAL NUMBER NEARBY WHEN ORDERING PARTS FOR YOUR MOTION COMPOSITES WHEELCHAIR

9003048
Wheel Lock - Footrest Stopper

ITEM NO.	PARTNO	DESCRIPTION	9003048 /QTY.
1	60201	FRAME SAVER	1
2	41120	WHEEL LOCK STOPPER	1
3	90777	SOCKET CAP SCREW M6X1 X 45mm LONG, 24mm THREADED + BLUE TREADLOCKER - BLACK ZINC	1

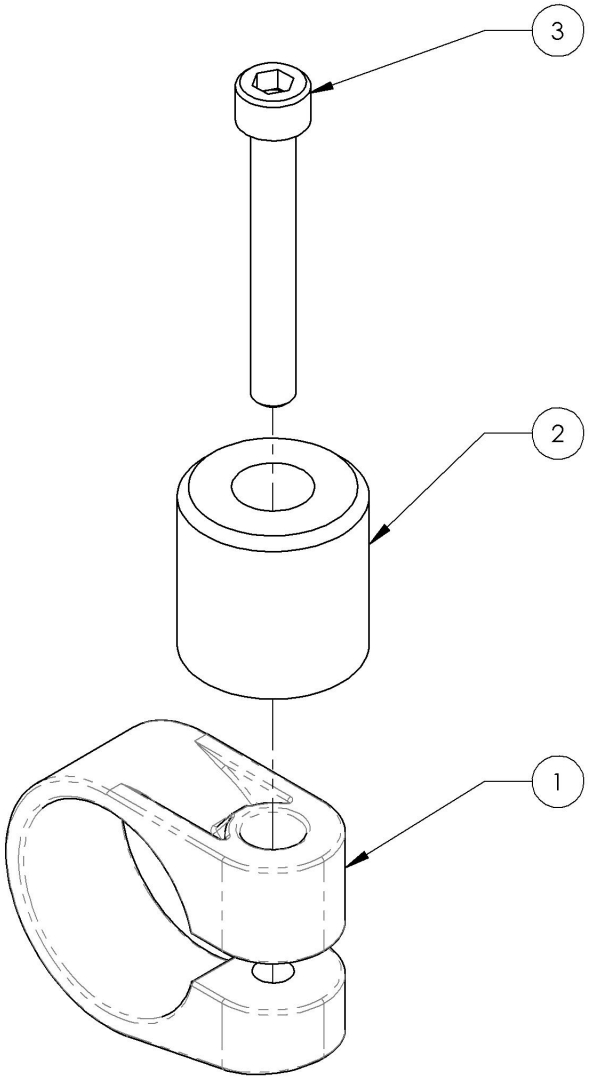

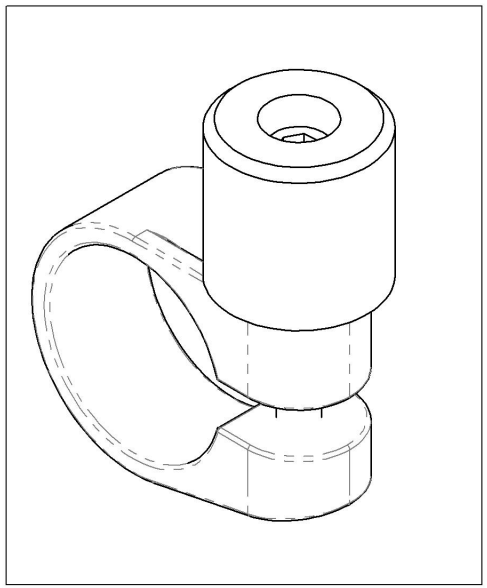

MAKE SURE TO HAVE YOUR SERIAL NUMBER NEARBY WHEN ORDERING PARTS FOR YOUR MOTION COMPOSITES WHEELCHAIR

Wheel Locks Catalogue
Attendent Wheel Lock, Kit

ITEM NO.	PARTNO	DESCRIPTION	QTY
1	9001574	Attendent Wheel Lock, Kit	1

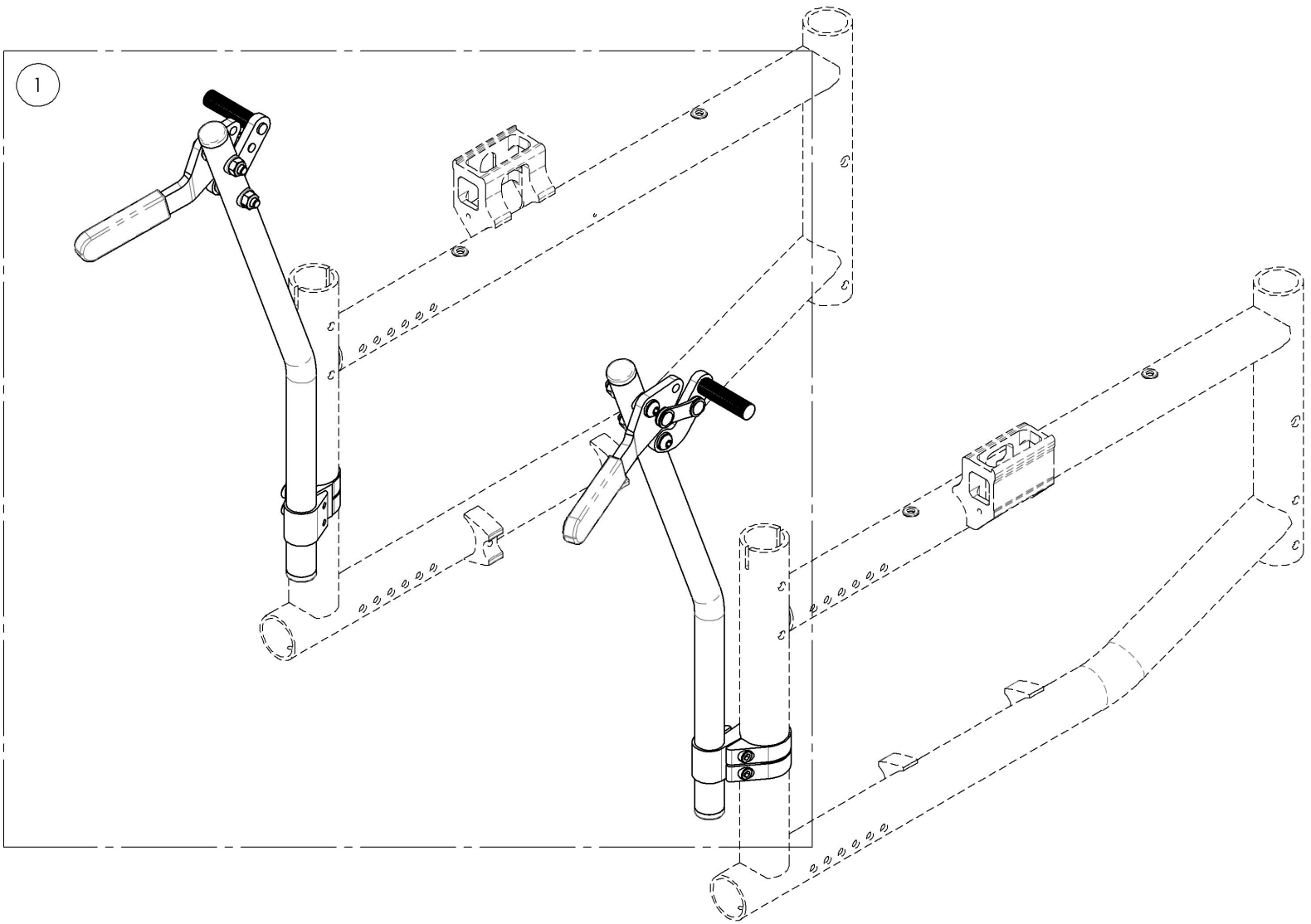

MAKE SURE TO HAVE YOUR SERIAL NUMBER NEARBY WHEN ORDERING PARTS FOR YOUR MOTION COMPOSITES WHEELCHAIR

9001574
Attendent Wheel Lock, Kit

ITEM NO.	PARTNO	DESCRIPTION	9001574 /QTY.
1	41711	ATTENDENT WHEEL LOCK - ASSY (PAIR)	1

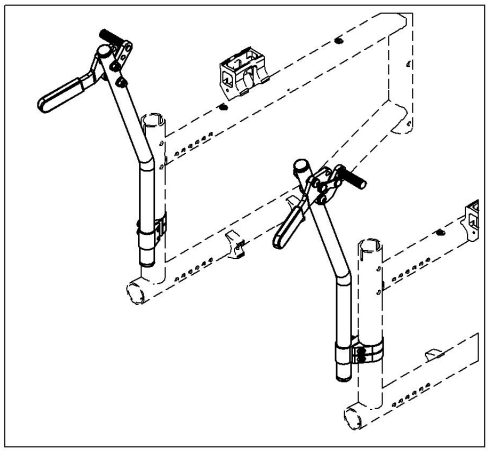

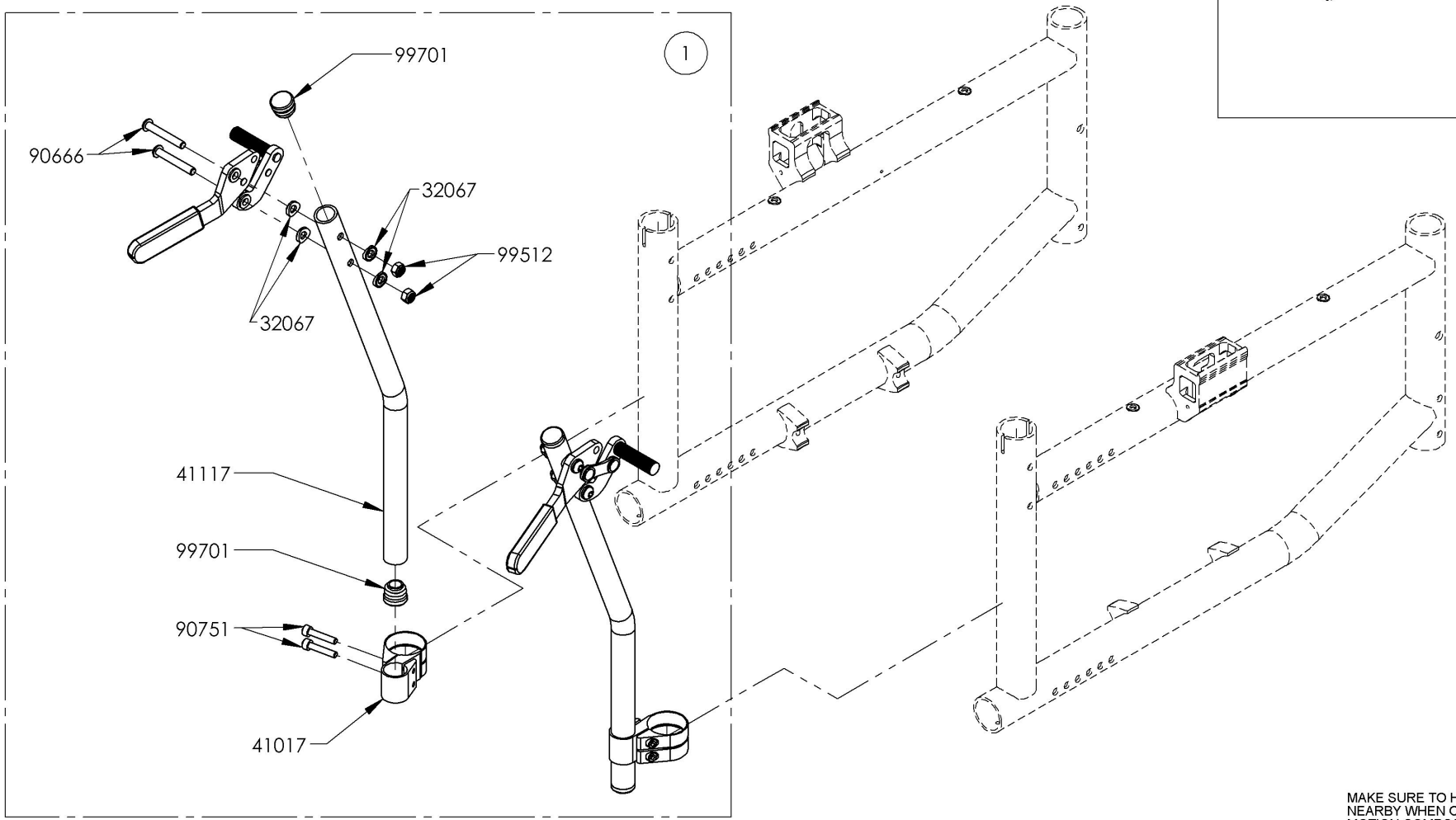

MAKE SURE TO HAVE YOUR SERIAL NUMBER NEARBY WHEN ORDERING PARTS FOR YOUR MOTION COMPOSITES WHEELCHAIR

Armrest Catalogue
Armrests

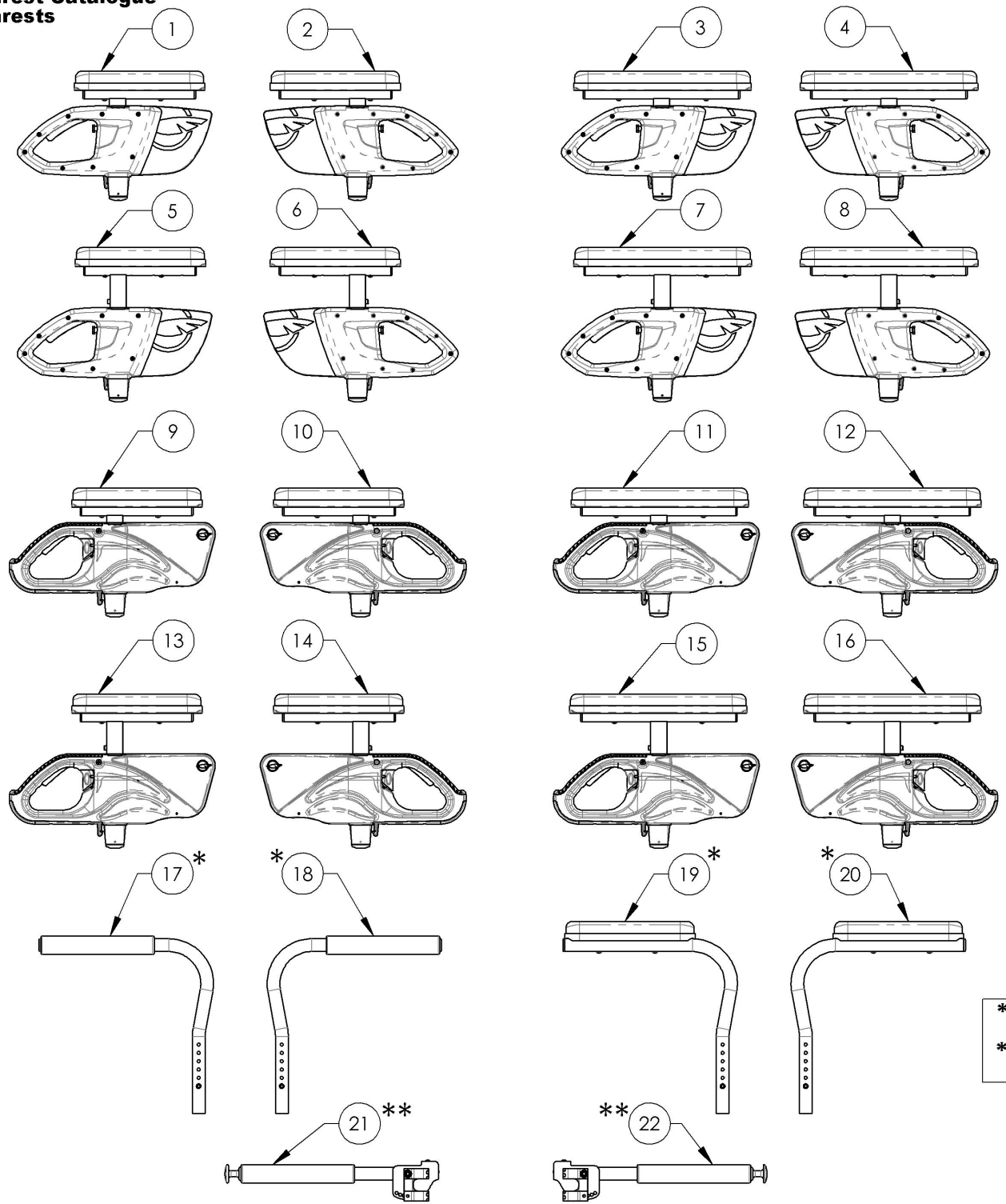

ITEM NO.	PARTNO	DESCRIPTION	QTY.
1	9003551	Armrest - Flip Back & T Type Right, 8-12 in, Desk Length	1
2	9003555	Armrest - T Type, Left, 8-12 in, Desk Length	1
3	9003552	Armrest - Flip Back & T Type Right, 8-12 in, Full Length	1
4	9003556	Armrest - T Type, Left, 8-12 in, Full Length	1
5	9003553	Armrest - T Type, Right, 10-14 in, Desk Length	1
6	9003557	Armrest - T Type, Left, 10-14 in, Desk Length	1
7	9003554	Armrest - T Type, Right, 10-14 in, Full Length	1
8	9003558	Armrest - T Type, Left, 10-14 in, Full Length	1
9	9001299	Armrest - Flip Back & T Type Right, 8-12 in, Desk Length	1
10	9001303	Armrest - Flip Back & T Type Left, 8-12 in, Desk Length	1
11	9001300	Armrest - Flip Back & T Type Right, 8-12 in, Full Length	1
12	9001304	Armrest - Flip Back & T Type Left, 8-12 in, Full Length	1
13	9001301	Armrest - Flip Back & T Type Right, 10-14 in, Desk Length	1
14	9001305	Armrest - Flip Back & T Type Left, 10-14 in, Desk Length	1
15	9001302	Armrest - Flip Back & T Type Right, 10-14 in, Full Length	1
16	9001306	Armrest - Flip Back & T Type Left, 10-14 in, Full Length	1
17 *	9001308	Armrest - Swing Away, Right, Tubular	1
18 *	9001309	Armrest - Swing Away, Left, Tubular	1
19 *	9001310	Armrest - Swing Away, Right, Desk Length	1
20 *	9001311	Armrest - Swing Away, Left, Desk Length	1
21**	9001316	Locking Armrest - Flip Up, Right	1
22**	9001317	Locking Armrest - Flip Up, Left	1

***:NOT AVAILABLE FOR DEPTH ADJUSTABLE BACK CANES**

****:ONLY USE WITH ALUMINIUM BACK CANES (**175lbs MAX**)**

MAKE SURE TO HAVE YOUR SERIAL NUMBER NEARBY WHEN ORDERING PARTS FOR YOUR MOTION COMPOSITES WHEELCHAIR

9003551_9003552
Armrest - T Type, Right, 8-12 in

ITEM NO.	PARTNO	DESCRIPTION	9003551 /QTY.	9003552 /QTY.
1	33038	ARMREST DESK PAD	1	-
2	33039	ARMREST FULL LENGTH PAD	-	1
3	33579	V2 ARMREST STRUCTURE 8-12" FOR DESK LENGTH - ASSEMBLY	1	-
4	33559	V2 ARMREST STRUCTURE 8-12" FOR FULL LENGTH - ASSEMBLY	-	1
5	33596	V2T ARMREST - ASSEMBLY	1	1
6	99013	SCREW PHILLIPS PAN HD #10_32 X 1_1_2 + BLUE THREADLOCKER	2	2

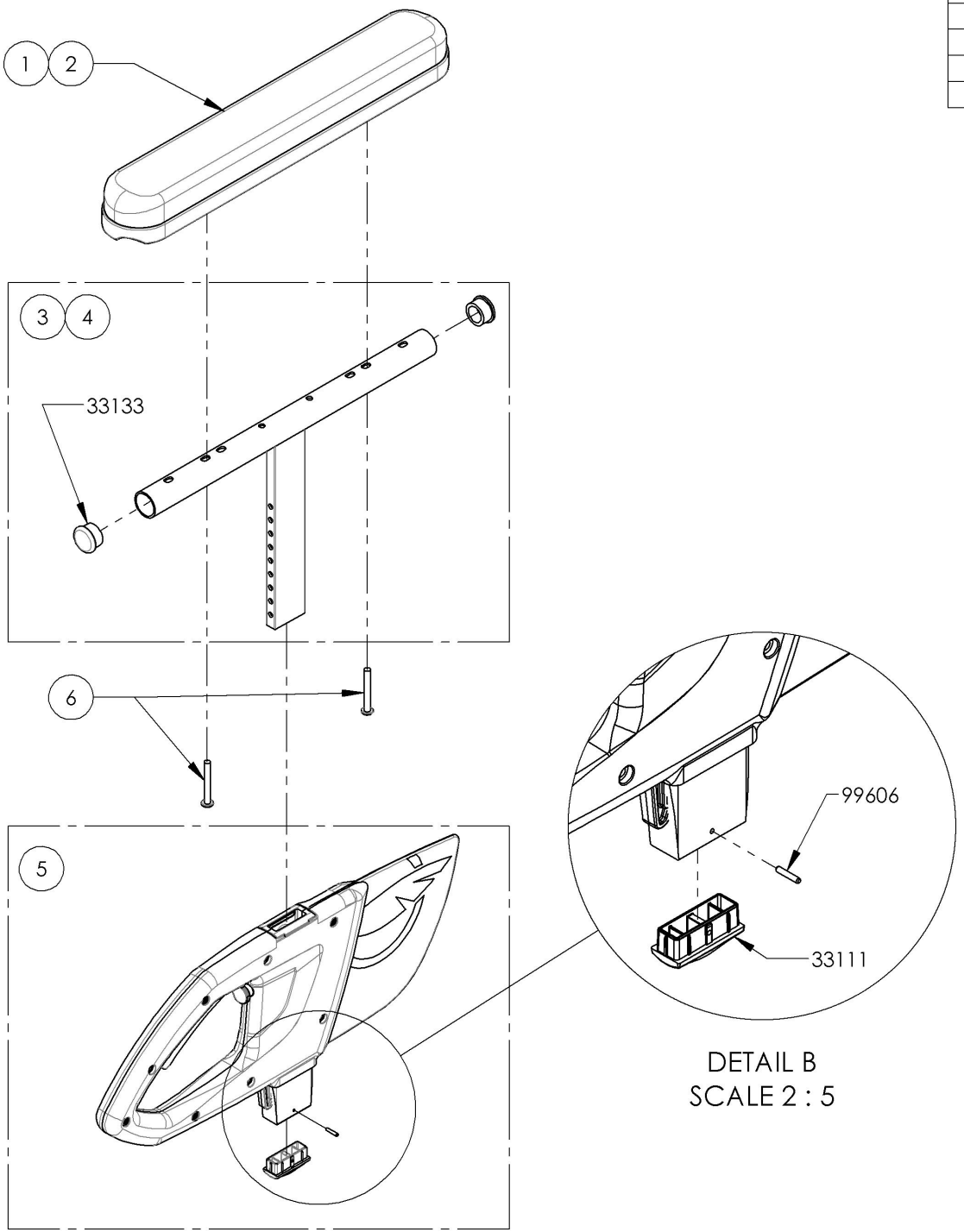

DETAIL B
SCALE 2 : 5

9003551
Armrest - Flip Back & T Type Right, 8-12 in, Desk Length

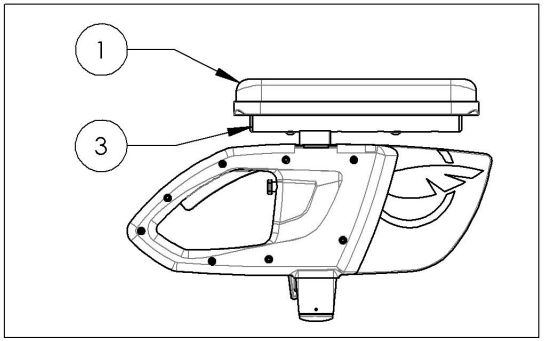

9003552
Armrest - Flip Back & T Type Right, 8-12 in, Full Length

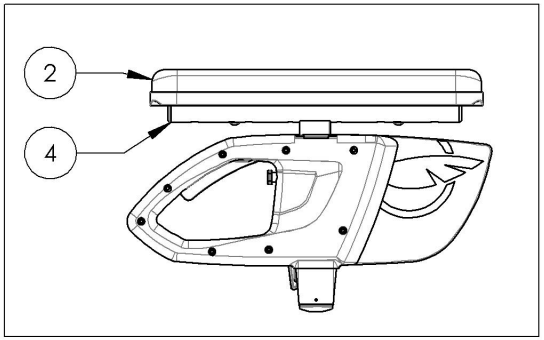

MAKE SURE TO HAVE YOUR SERIAL NUMBER NEARBY WHEN ORDERING PARTS FOR YOUR MOTION COMPOSITES WHEELCHAIR

9003553_9003554
Armrest - T Type, Right, 10-14 in

ITEM NO.	PART NO.	DESCRIPTION	9003553 /QTY.	9003554 /QTY.
1	33038	ARMREST DESK PAD	1	-
2	33039	ARMREST FULL LENGTH PAD	-	1
3	33580	V2 ARMREST STRUCTURE 10-14" FOR DESK LENGTH - ASSEMBLY	1	-
4	33560	V2 ARMREST STRUCTURE 10-14" FOR FULL LENGTH - ASSEMBLY	-	1
5	33596	V2T ARMREST - ASSEMBLY	1	1
6	99013	SCREW PHILLIPS PAN HD #10_32 X 1_1_2 + BLUE THREADLOCKER	2	2

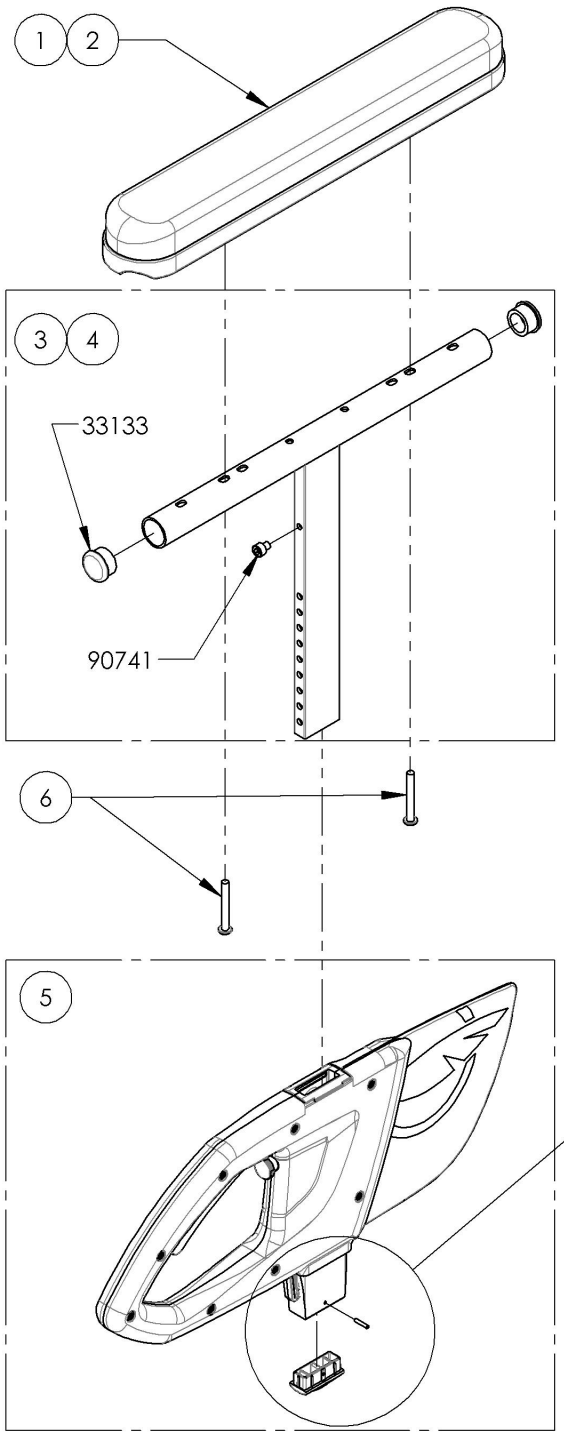

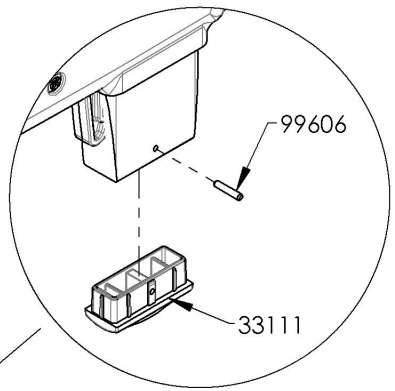

DETAIL A
SCALE 2 : 5

9003553
Armrest - T Type, Right, 10-14 in, Desk Length

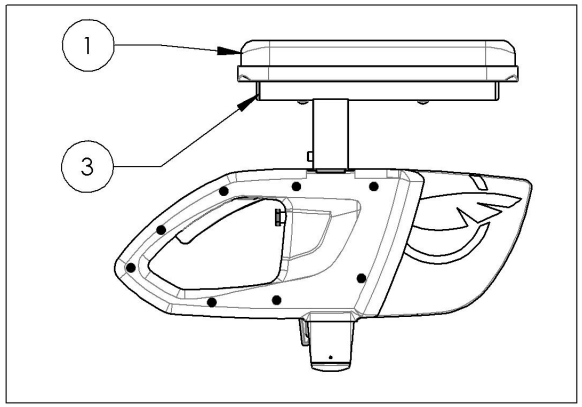

9003554
Armrest - T Type, Right, 10-14 in, Full Length

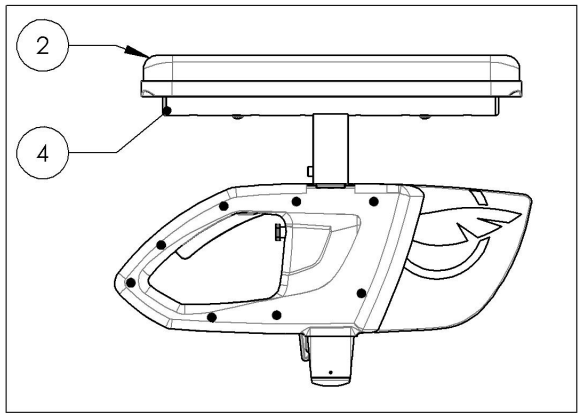

MAKE SURE TO HAVE YOUR SERIAL NUMBER NEARBY WHEN ORDERING PARTS FOR YOUR MOTION COMPOSITES WHEELCHAIR

9003555_9003556
Armrest - T Type, Left, 8-12 in

ITEM NO.	PARTNO	DESCRIPTION	9003555 /QTY.	9003556 /QTY.
1	33038	ARMREST DESK PAD	1	-
2	33039	ARMREST FULL LENGTH PAD	-	1
3	33579	V2 ARMREST STRUCTURE 8-12" FOR DESK LENGTH - ASSEMBLY	1	-
4	33559	V2 ARMREST STRUCTURE 8-12" FOR FULL LENGTH - ASSEMBLY	-	1
5	33596	V2T ARMREST - ASSEMBLY	1	1
6	99013	SCREW PHILLIPS PAN HD #10_32 X 1_1_2 + BLUE THREADLOCKER	2	2

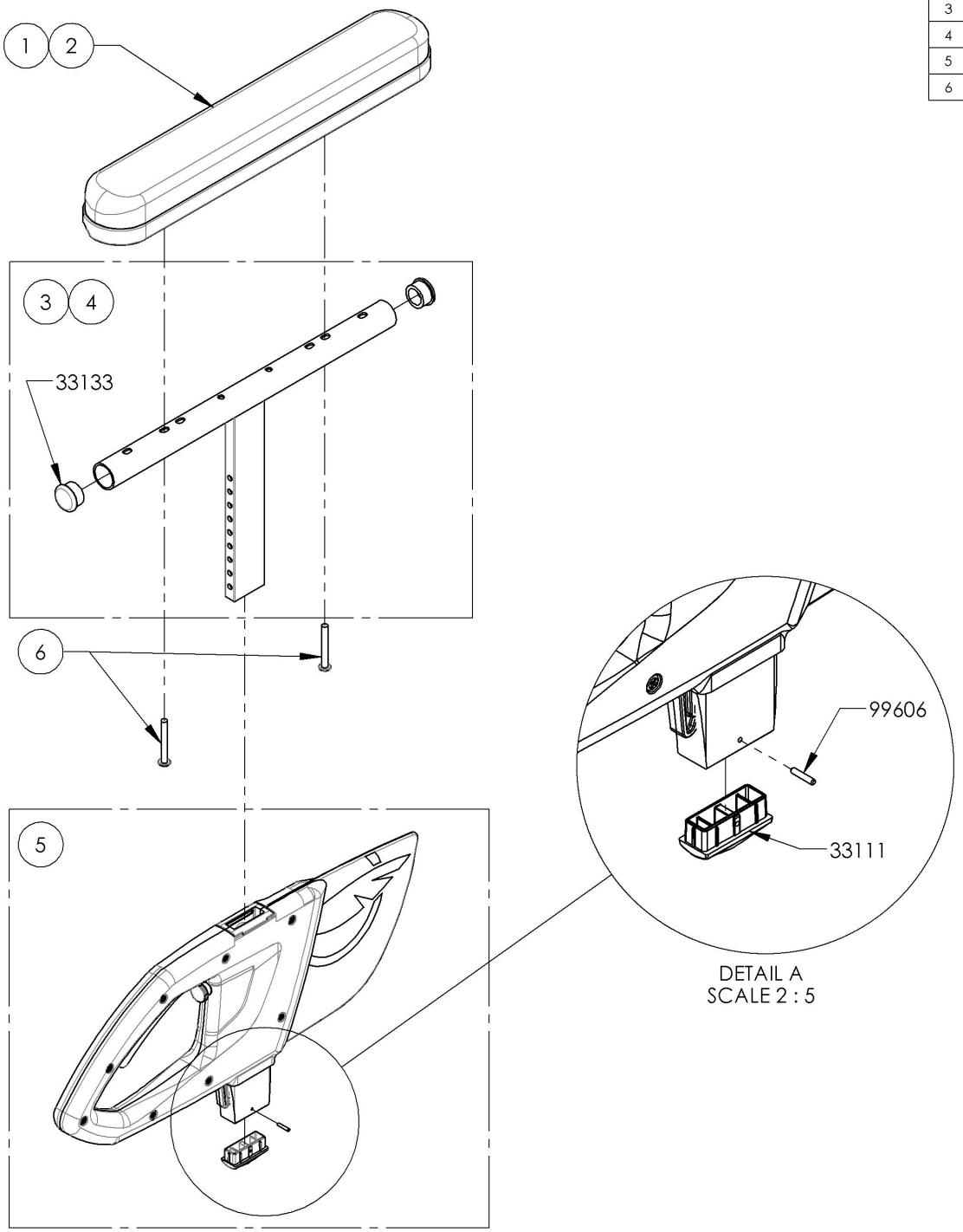

9003555
Armrest - T Type, Left, 8-12 in, Desk Length

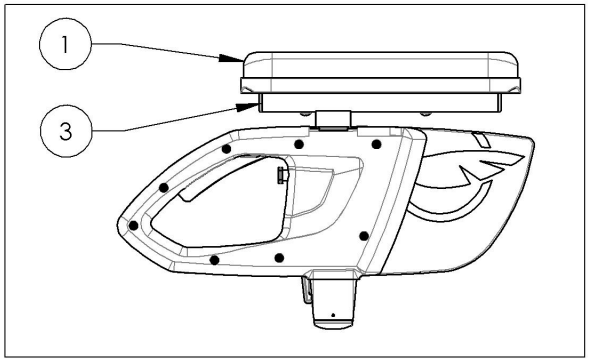

9003556
Armrest - T Type, Left, 8-12 in, Full Length

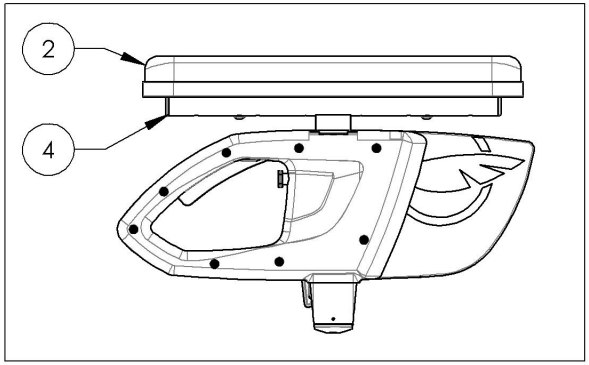

MAKE SURE TO HAVE YOUR SERIAL NUMBER NEARBY WHEN ORDERING PARTS FOR YOUR MOTION COMPOSITES WHEELCHAIR

9003557_9003558
Armrest - T Type, Left, 10-14 in

ITEM NO.	PART NO.	DESCRIPTION	9003557 /QTY.	9003558 /QTY.
1	33038	ARMREST DESK PAD	1	-
2	33039	ARMREST FULL LENGTH PAD	-	1
3	33580	V2 ARMREST STRUCTURE 10-14" FOR DESK LENGTH - ASSEMBLY	1	-
4	33560	V2 ARMREST STRUCTURE 10-14" FOR FULL LENGTH - ASSEMBLY	-	1
5	33596	V2T ARMREST - ASSEMBLY	1	1
6	99013	SCREW PHILLIPS PAN HD #10_32 X 1_1_2 + BLUE THREADLOCKER	2	2

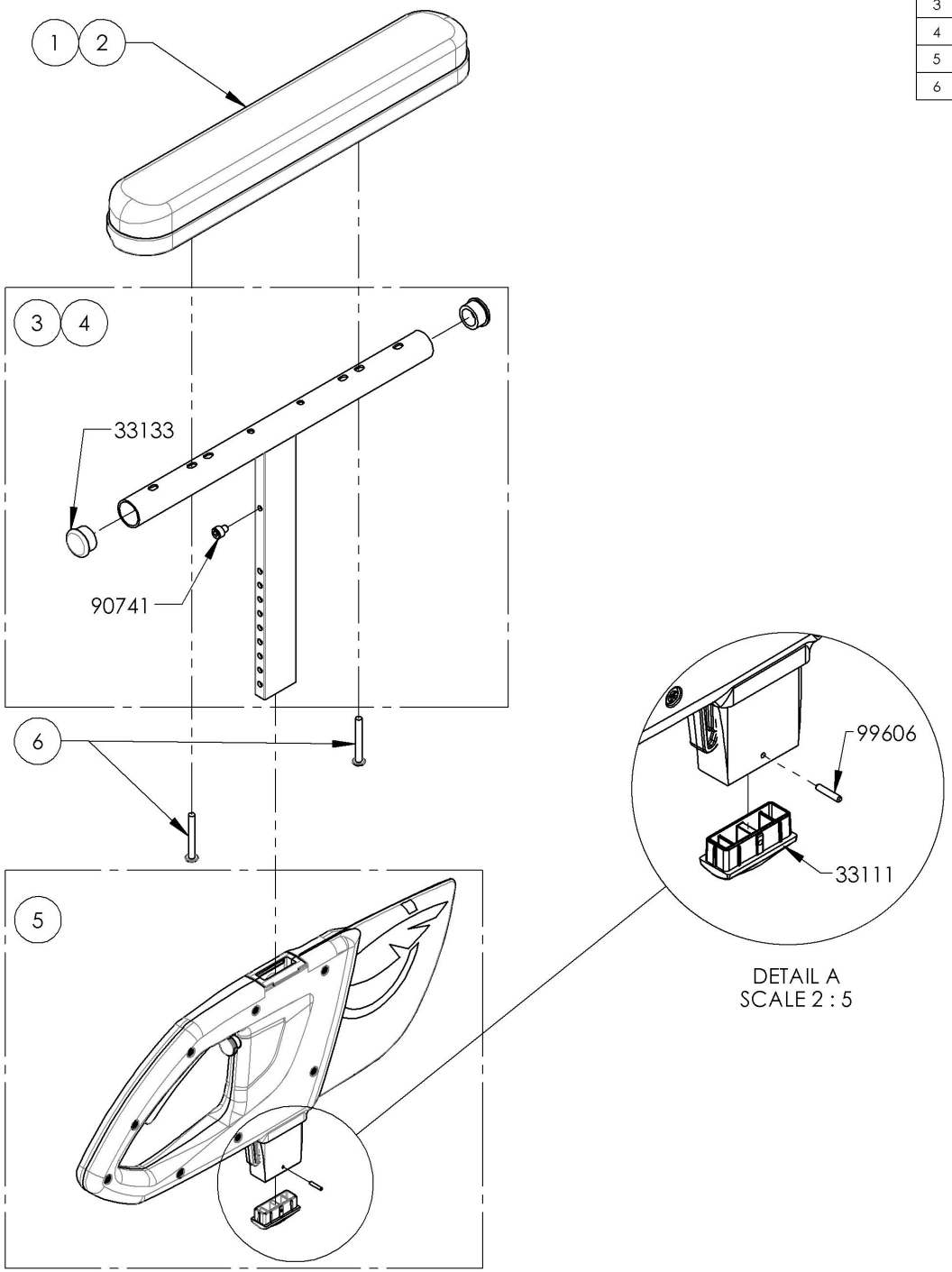

DETAIL A
SCALE 2 : 5

9003557
Armrest - T Type, Left, 10-14 in, Desk Length

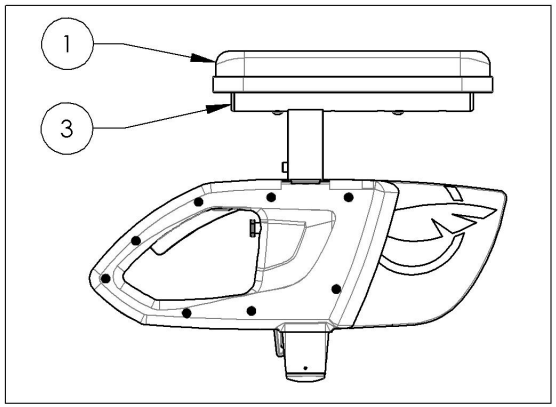

9003558
Armrest - T Type, Left, 10-14 in, Full Length

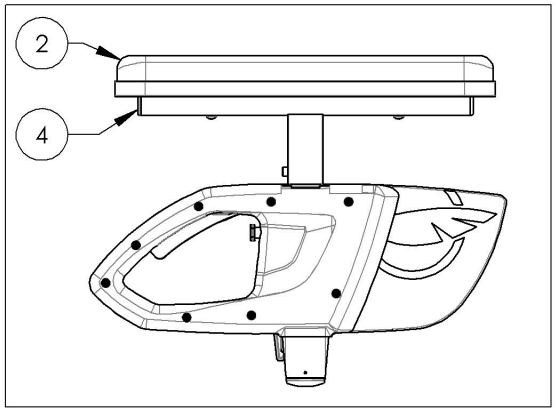

MAKE SURE TO HAVE YOUR SERIAL NUMBER NEARBY WHEN ORDERING PARTS FOR YOUR MOTION COMPOSITES WHEELCHAIR

9001299_9001300
Armrest - Flip Back & T Type Right, 8-12 in

ITEM NO.	PARTNO	DESCRIPTION	9001299 /QTY.	9001300 /QTY.
1	33038	ARMREST DESK PAD	1	-
2	33039	ARMREST FULL LENGTH PAD	-	1
3	33579	V2 ARMREST STRUCTURE 8-12" FOR DESK LENGTH - ASSEMBLY	1	-
4	33559	V2 ARMREST STRUCTURE 8-12" FOR FULL LENGTH - ASSEMBLY	-	1
5	33554	V2 ARMREST - MAIN BODY	1	1
6	99013	SCREW PHILLIPS PAN HD #10_32 X 1_1_2 + BLUE THREADLOCKER	2	2

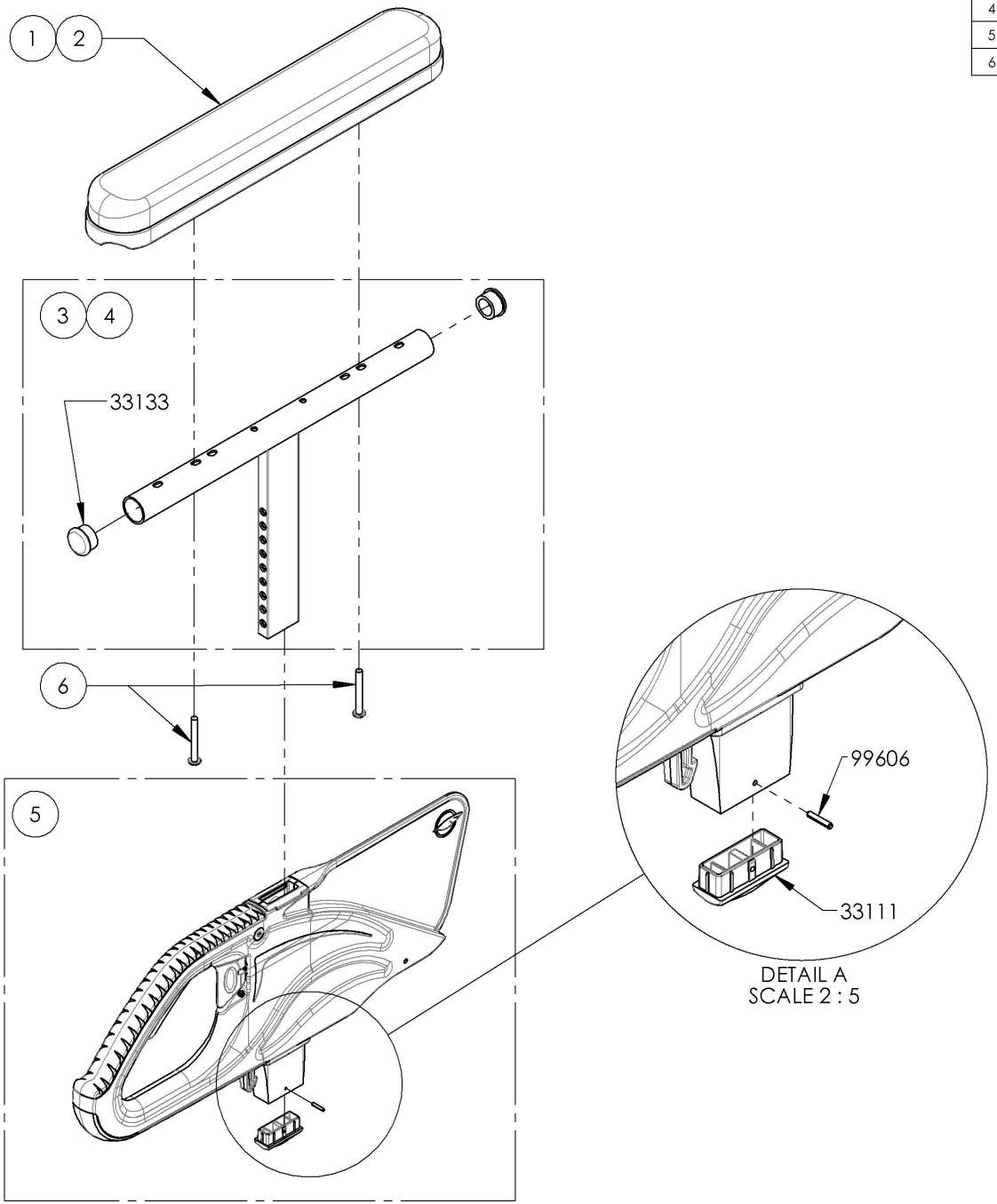

DETAIL A
SCALE 2 : 5

9001299
Armrest - Flip Back & T Type Right, 8-12 in, Desk Length

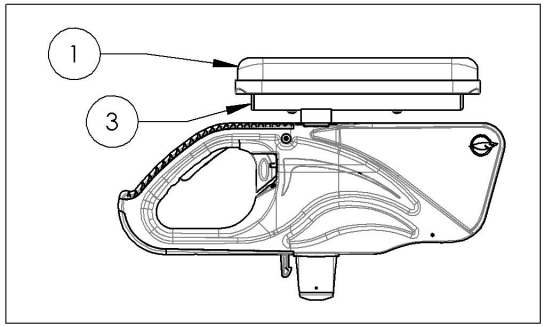

9001300
Armrest - Flip Back & T Type Right, 8-12 in, Full Length

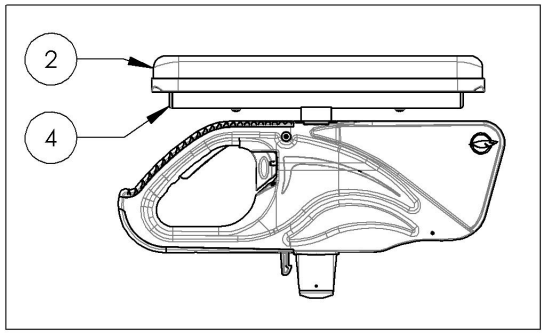

MAKE SURE TO HAVE YOUR SERIAL NUMBER NEARBY WHEN ORDERING PARTS FOR YOUR MOTION COMPOSITES WHEELCHAIR

9001303_9001304
Armrest - Flip Back & T Type Left, 8-12 in

ITEM NO.	PARTNO	DESCRIPTION	9001303 /QTY.	9001304 /QTY.
1	33038	ARMREST DESK PAD	1	-
2	33039	ARMREST FULL LENGTH PAD	-	1
3	33579	V2 ARMREST STRUCTURE 8-12" FOR DESK LENGTH - ASSEMBLY	1	-
4	33559	V2 ARMREST STRUCTURE 8-12" FOR FULL LENGTH - ASSEMBLY	-	1
5	33554	V2 ARMREST - MAIN BODY	1	1
6	99013	SCREW PHILLIPS PAN HD #10_32 X 1_1_2 + BLUE THREADLOCKER	2	2

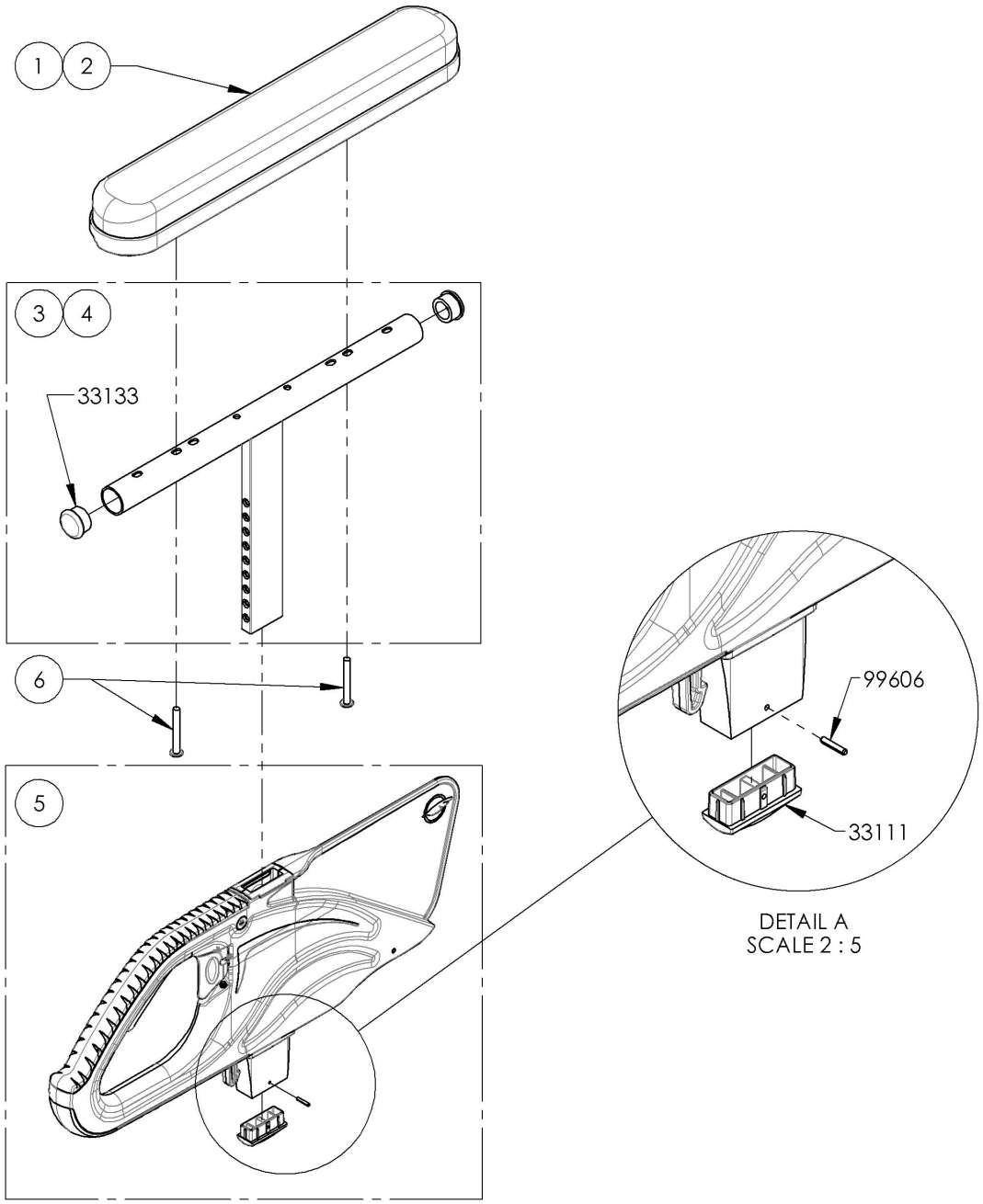

DETAIL A
SCALE 2 : 5

9001303
Armrest - Flip Back & T Type Left, 8-12 in, Desk Length

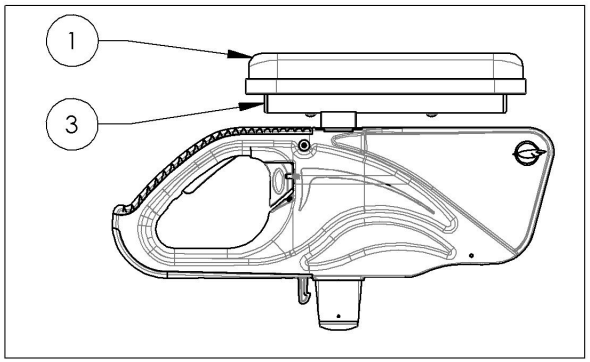

9001304
Armrest - Flip Back & T Type Left, 8-12 in, Full Length

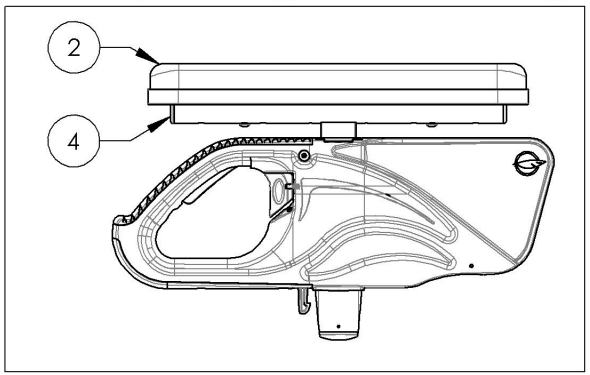

MAKE SURE TO HAVE YOUR SERIAL NUMBER NEARBY WHEN ORDERING PARTS FOR YOUR MOTION COMPOSITES WHEELCHAIR

9001301_9001302
Armrest - Flip Back & T Type Right, 10-14 in

ITEM NO.	PART NO.	DESCRIPTION	9001301 /QTY.	9001302 /QTY.
1	33038	ARMREST DESK PAD	1	-
2	33039	ARMREST FULL LENGTH PAD	-	1
3	33580	V2 ARMREST STRUCTURE 10-14" FOR DESK LENGTH - ASSEMBLY	1	-
4	33560	V2 ARMREST STRUCTURE 10-14" FOR FULL LENGTH - ASSEMBLY	-	1
5	33554	V2 ARMREST - MAIN BODY	1	1
6	99013	SCREW PHILLIPS PAN HD #10_32 X 1_1_2 + BLUE THREADLOCKER	2	2

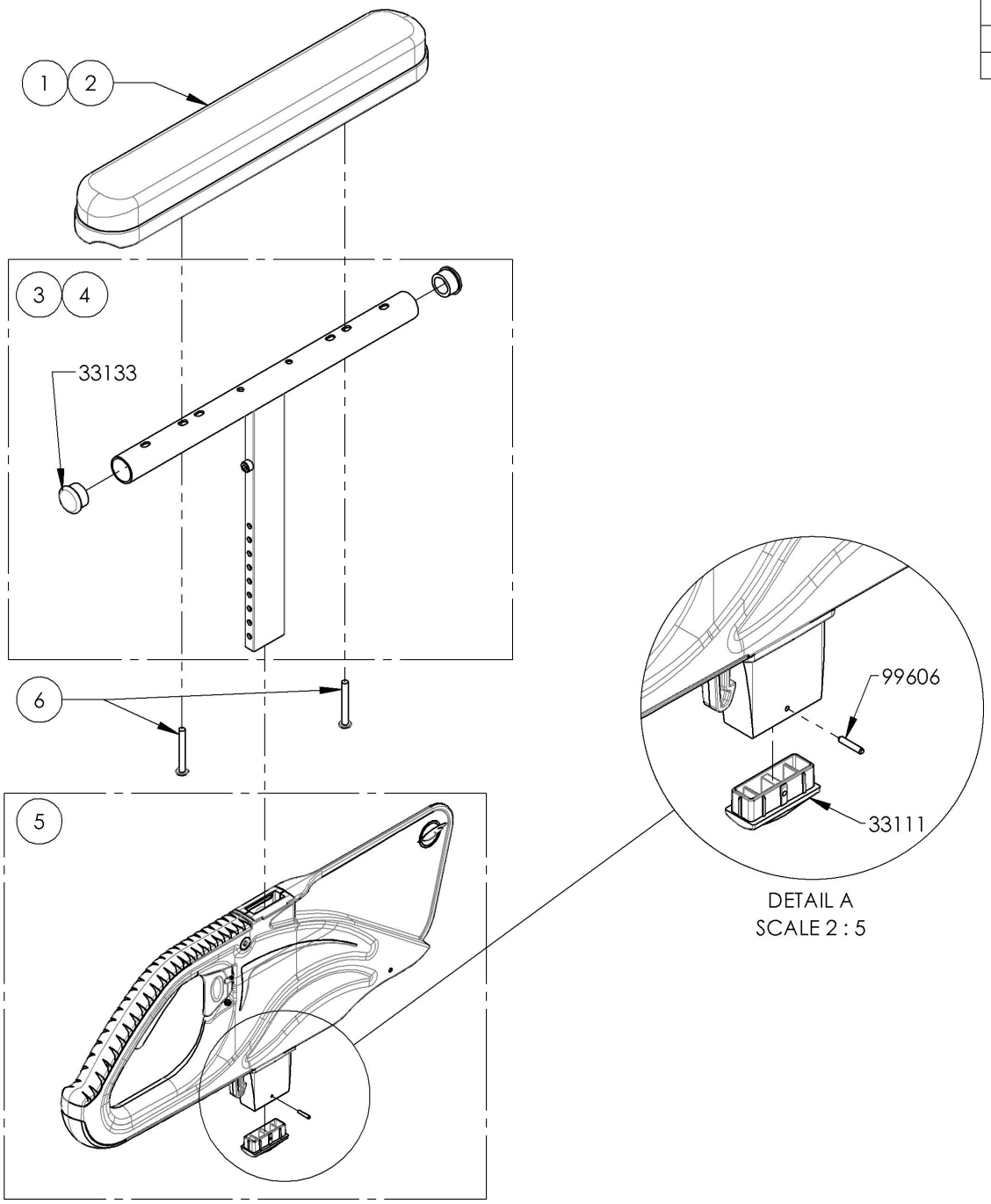

DETAIL A
SCALE 2 : 5

9001301
Armrest - Flip Back & T Type Right, 10-14 in, Desk Length

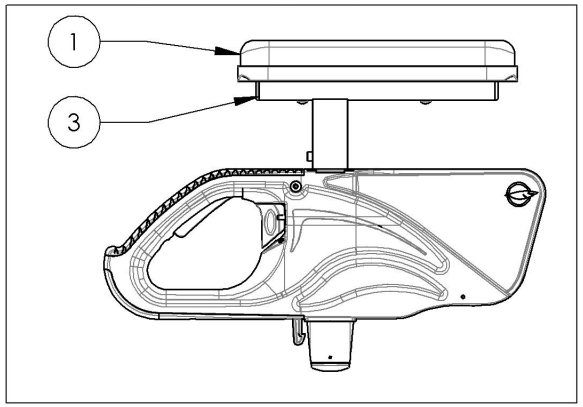

9001302
Armrest - Flip Back & T Type Right, 10-14 in, Full Length

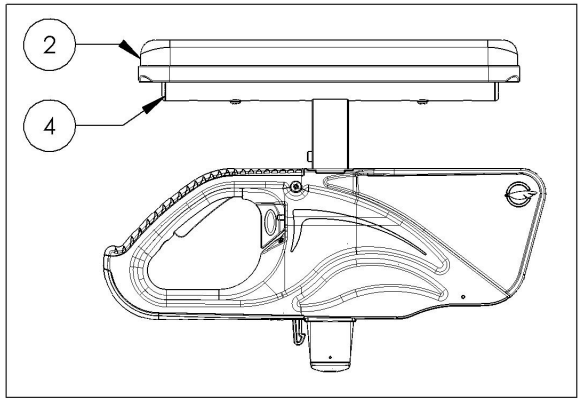

MAKE SURE TO HAVE YOUR SERIAL NUMBER NEARBY WHEN ORDERING PARTS FOR YOUR MOTION COMPOSITES WHEELCHAIR

9001305_9001306
Armrest - Flip Back & T Type Left, 10-14 in

ITEM NO.	PART NO.	DESCRIPTION	9001305 /QTY.	9001306 /QTY.
1	33038	ARMREST DESK PAD	1	-
2	33039	ARMREST FULL LENGTH PAD	-	1
3	33580	V2 ARMREST STRUCTURE 10-14" FOR DESK LENGTH - ASSEMBLY	1	-
4	33560	V2 ARMREST STRUCTURE 10-14" FOR FULL LENGTH - ASSEMBLY	-	1
5	33554	V2 ARMREST - MAIN BODY	1	1
6	99013	SCREW PHILLIPS PAN HD #10_32 X 1_1_2 + BLUE THREADLOCKER	2	2

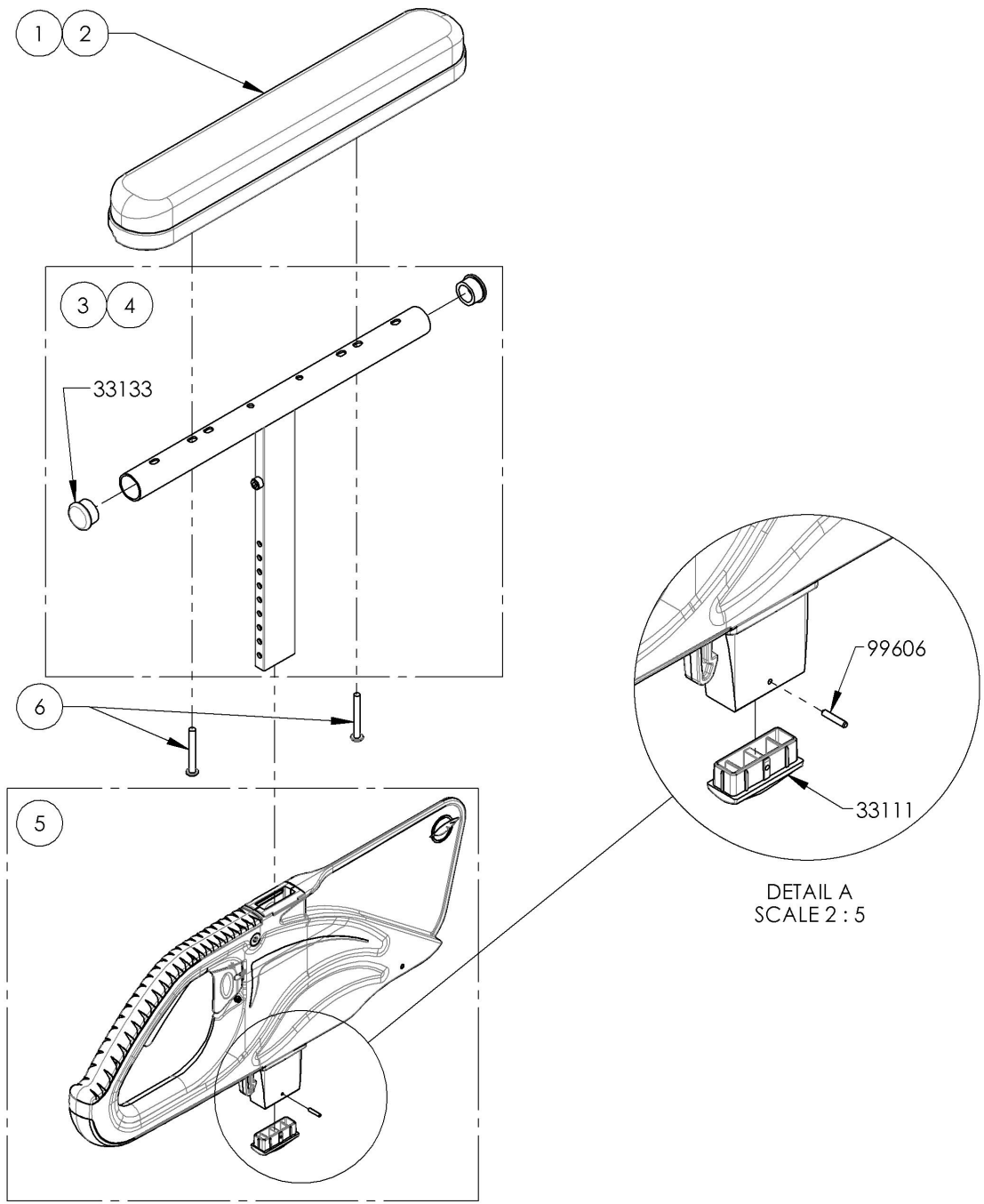

DETAIL A
SCALE 2 : 5

9001305
Armrest - Flip Back & T Type Left, 10-14 in, Desk Length

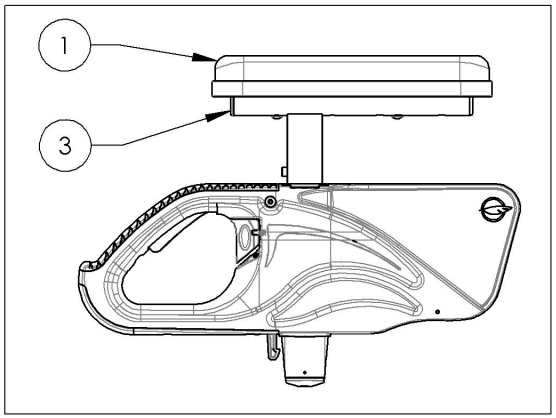

9001306
Armrest - Flip Back & T Type Left, 10-14 in, Full Length

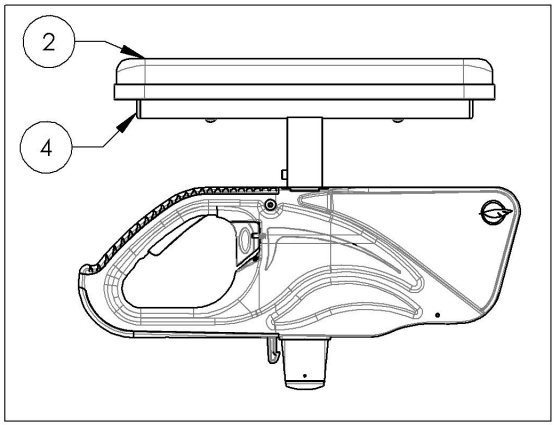

MAKE SURE TO HAVE YOUR SERIAL NUMBER NEARBY WHEN ORDERING PARTS FOR YOUR MOTION COMPOSITES WHEELCHAIR

9001308
Armrest - Swing Away, Right, Tubular

ITEM NO.	PARTNO	DESCRIPTION	9001308 /QTY.
1	99702	CAP 1 IN ALU	1
2	33049	SWING AWAY TUBULAR FOAM GRIP	1
3	33035	L TYPE ARMREST RIGHT (M)	1
4	33552	SWING AWAY SPLIT NUT - ASSEMBLY (M)	1

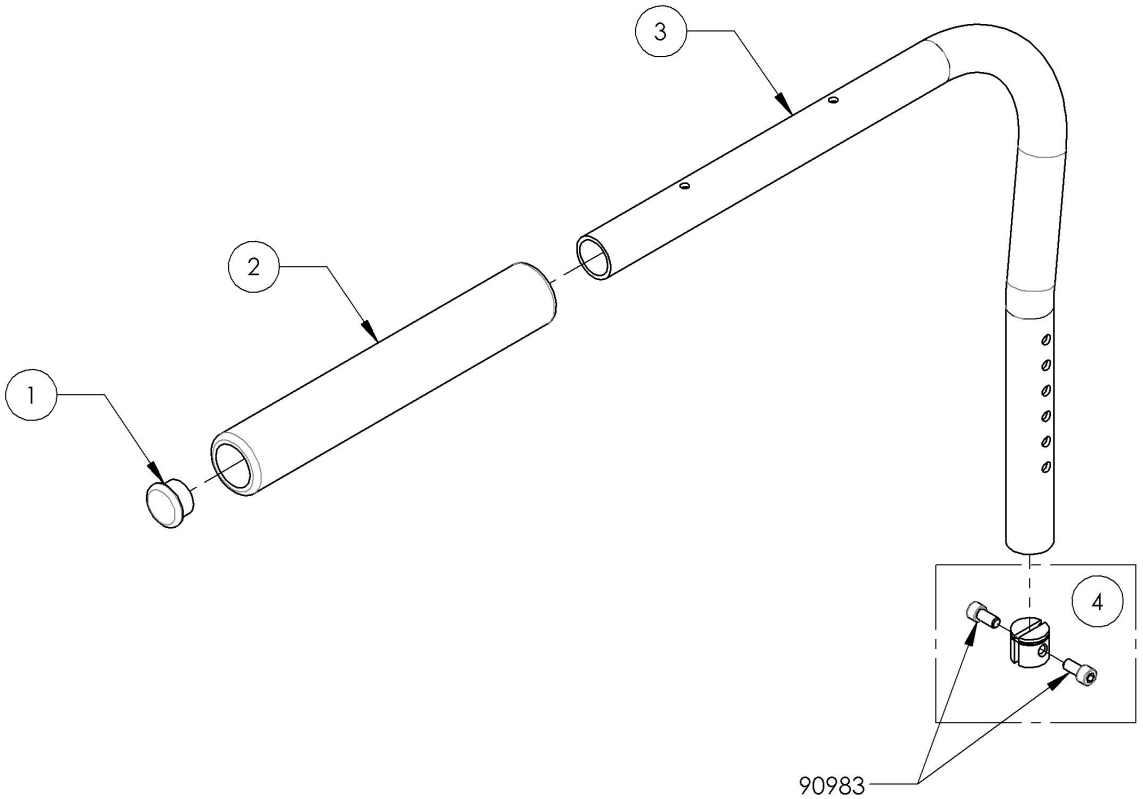

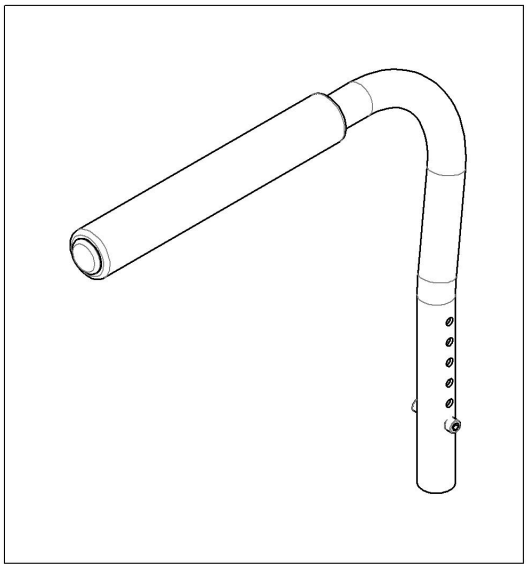

MAKE SURE TO HAVE YOUR SERIAL NUMBER NEARBY WHEN ORDERING PARTS FOR YOUR MOTION COMPOSITES WHEELCHAIR

9001309
Armrest - Swing Away, Left, Tubular

ITEM NO.	PARTNO	DESCRIPTION	9001309 /QTY.
1	99702	CAP 1 IN ALU	1
2	33049	SWING AWAY TUBULAR FOAM GRIP	1
3	33036	L TYPE ARMREST LEFT (M)	1
4	33552	SWING AWAY SPLIT NUT - ASSEMBLY (M)	1

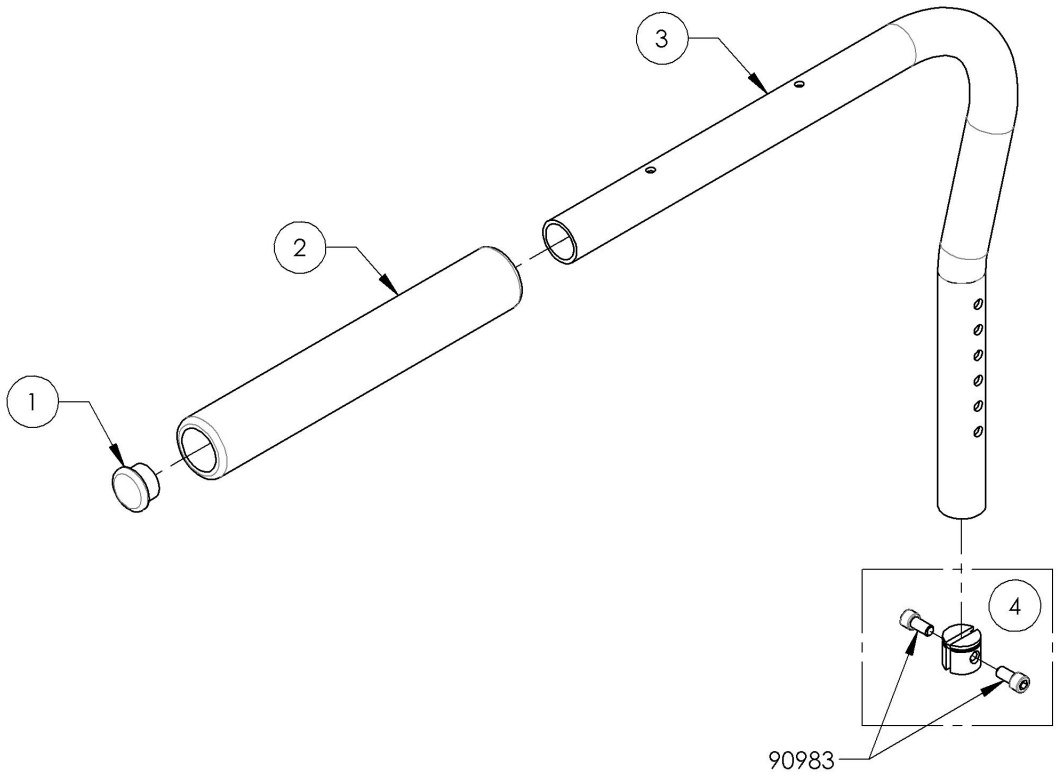

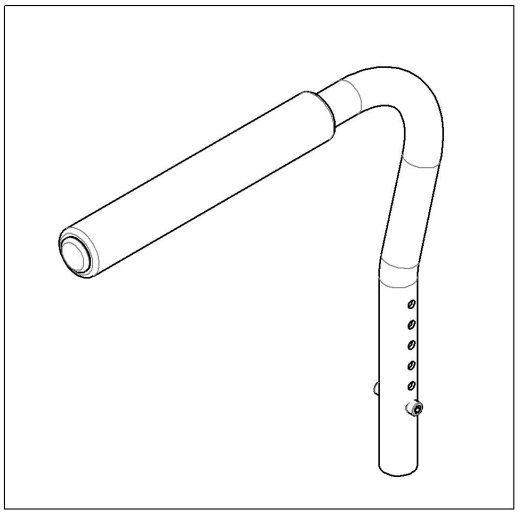

MAKE SURE TO HAVE YOUR SERIAL NUMBER NEARBY WHEN ORDERING PARTS FOR YOUR MOTION COMPOSITES WHEELCHAIR

9001310
Armrest - Swing Away, Right, Desk Length

ITEM NO.	PARTNO	DESCRIPTION	9001310 /QTY.
1	99702	CAP 1 IN ALU	1
2	33038	ARMREST DESK PAD	1
3	33035	L TYPE ARMREST RIGHT (M)	1
4	99013	SCREW PHILLIPS PAN HD #10_32 X 1_1_2 + BLUE THREADLOCKER	2
5	33552	SWING AWAY SPLIT NUT - ASSEMBLY (M)	1

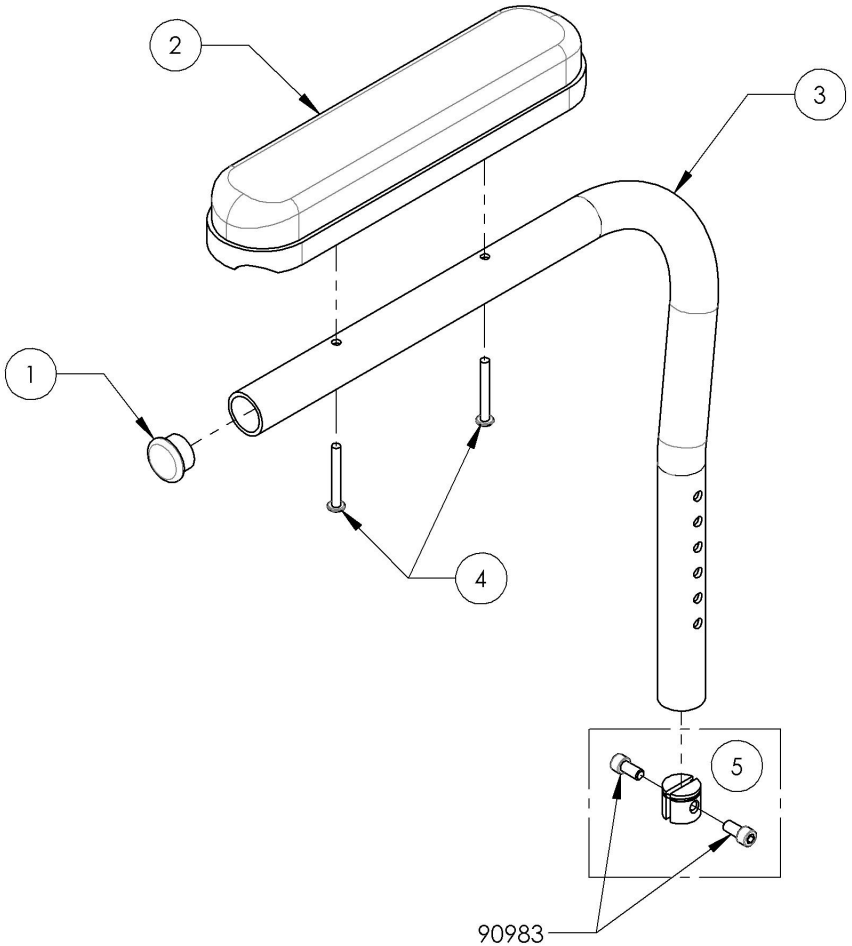

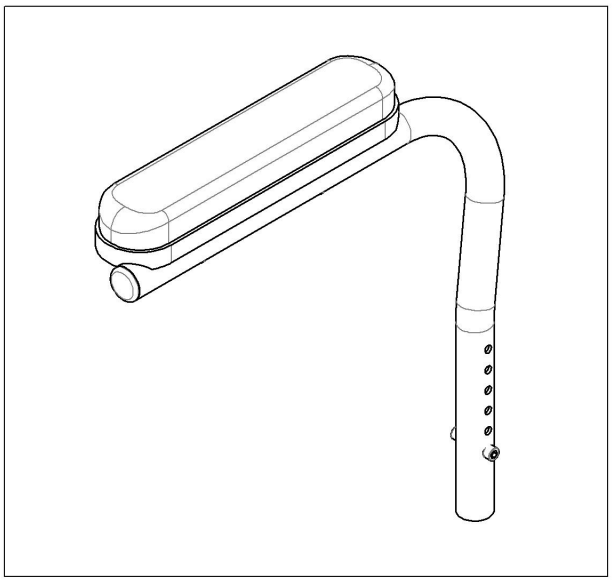

MAKE SURE TO HAVE YOUR SERIAL NUMBER NEARBY WHEN ORDERING PARTS FOR YOUR MOTION COMPOSITES WHEELCHAIR

9001311
Armrest - Swing Away, Left, Desk Length

ITEM NO.	PARTNO	DESCRIPTION	9001311 /QTY.
1	99702	CAP 1 IN ALU	1
2	33038	ARMREST DESK PAD	1
3	33036	L TYPE ARMREST LEFT (M)	1
4	99013	SCREW PHILLIPS PAN HD #10_32 X 1_1_2 + BLUE THREADLOCKER	2
5	33552	SWING AWAY SPLIT NUT - ASSEMBLY (M)	1

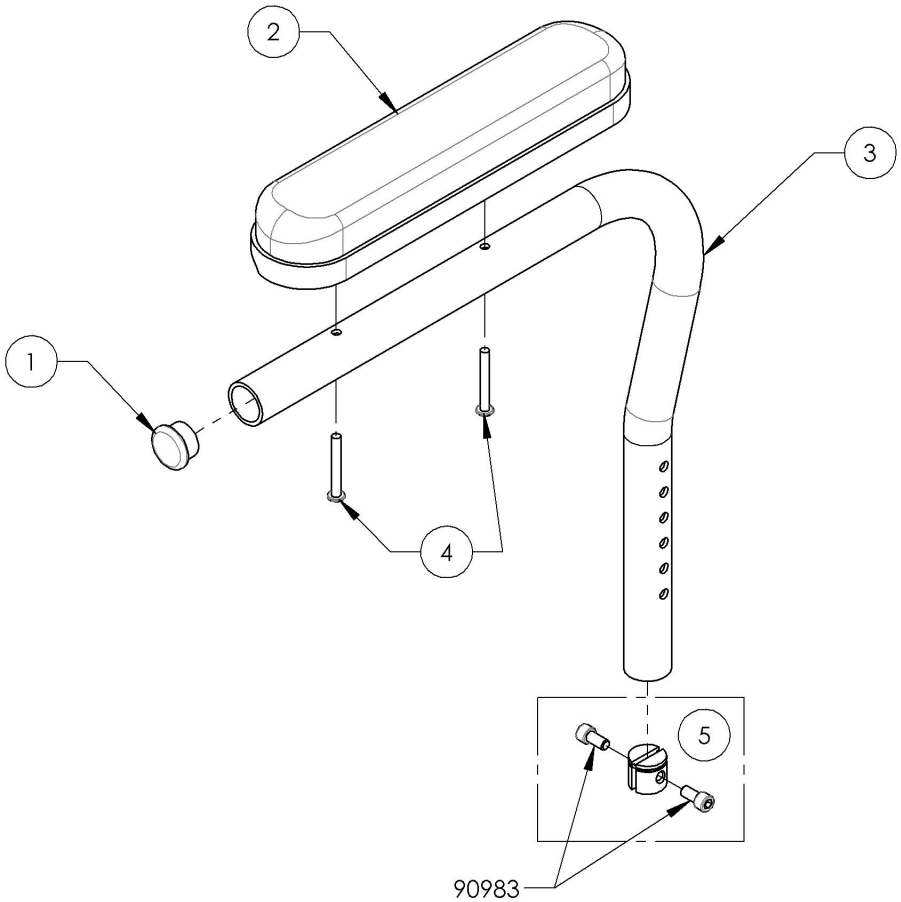

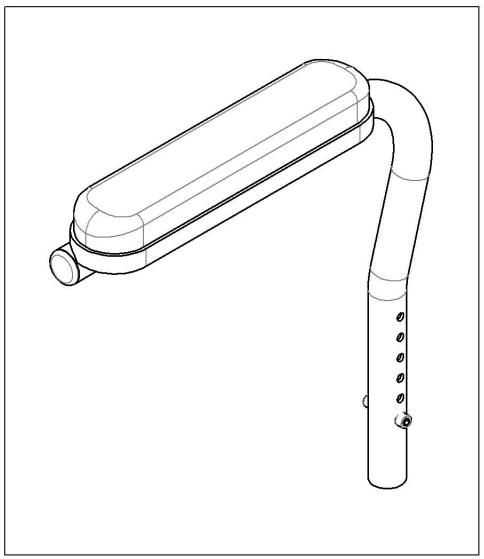

MAKE SURE TO HAVE YOUR SERIAL NUMBER NEARBY WHEN ORDERING PARTS FOR YOUR MOTION COMPOSITES WHEELCHAIR

9001316
Locking Armrest - Flip Up, Right

ITEM NO.	PARTNO	DESCRIPTION	9001316 /QTY.
1	33503	FLIP UP I ARMREST - RIGHT ASSEMBLY (M)	1

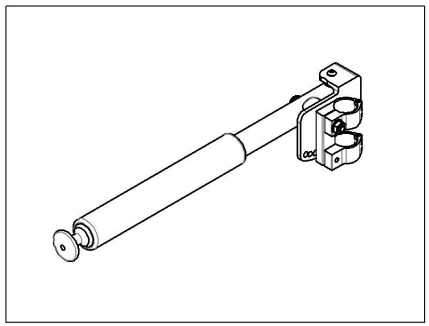

Depth Adjustable Back Canes
Limited to **175lbs MAX**

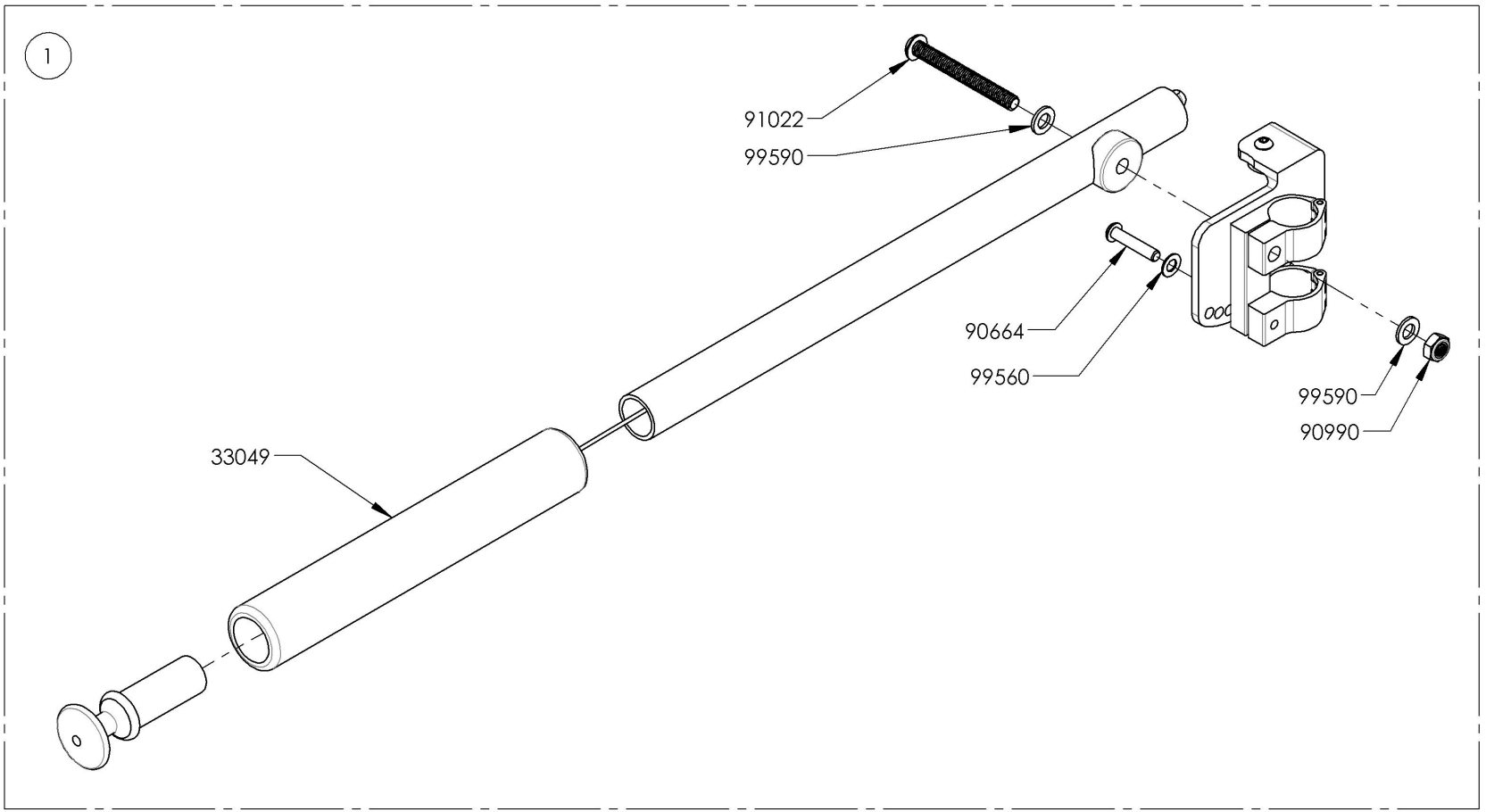

MAKE SURE TO HAVE YOUR SERIAL NUMBER NEARBY WHEN ORDERING PARTS FOR YOUR MOTION COMPOSITES WHEELCHAIR

9001317
Locking Armrest - Flip Up, Left

ITEM NO.	PARTNO	DESCRIPTION	9001317 /QTY.
1	33504	FLIP UP I ARMREST - LEFT ASSEMBLY (M)	1

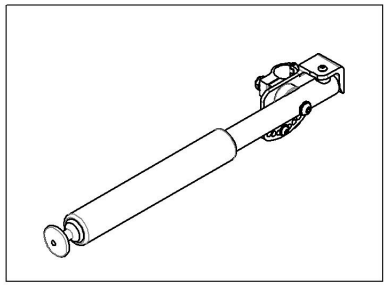

Depth Adjustable Back Canes
Limited to **175lbs MAX**

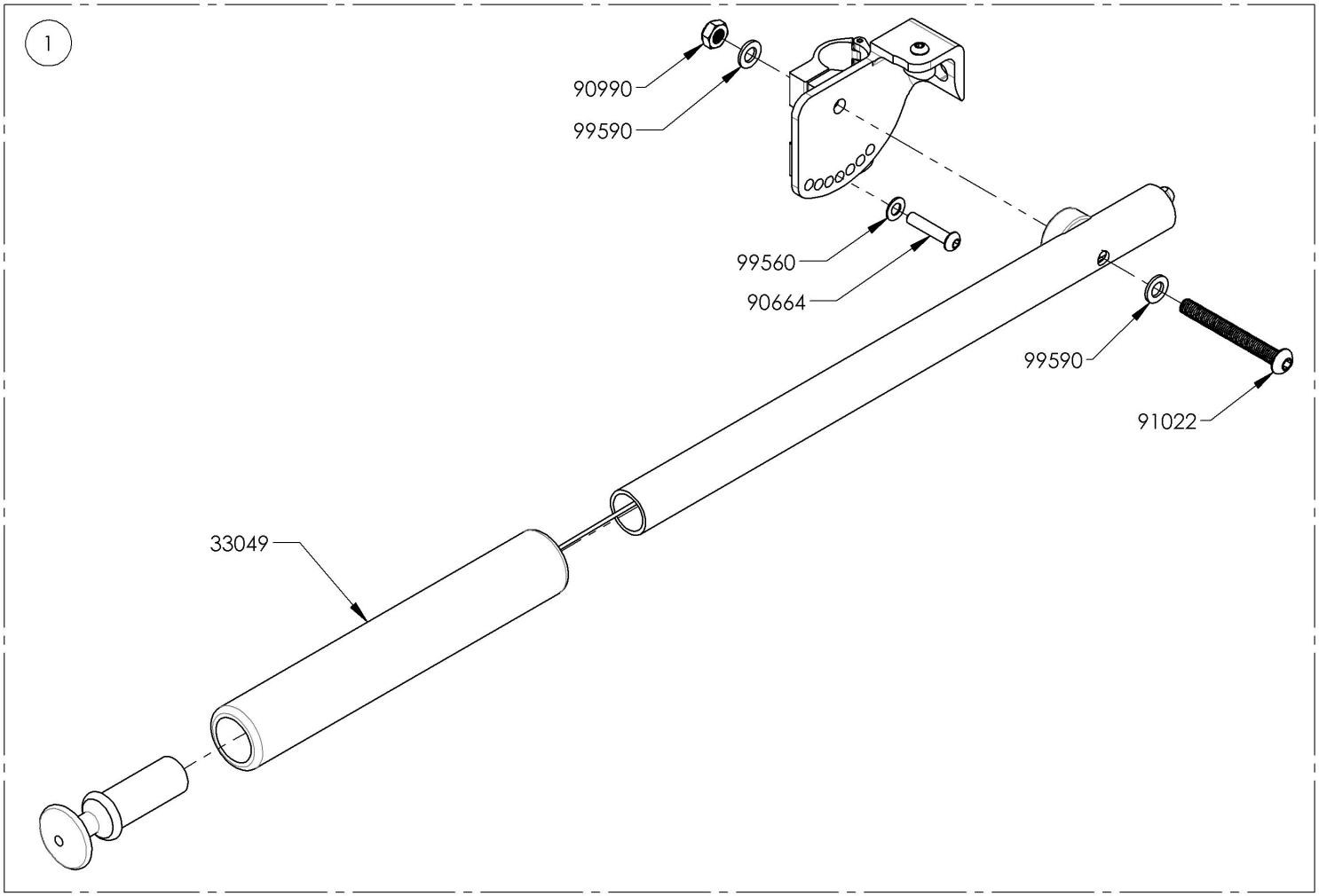

MAKE SURE TO HAVE YOUR SERIAL NUMBER NEARBY WHEN ORDERING PARTS FOR YOUR MOTION COMPOSITES WHEELCHAIR

Armrest Catalogue
Armrest - Gel Armrest Pad

ITEM NO.	PARTNO	DESCRIPTION	QTY
1	9002932	Armrest - Gel Armrest Pad, Full Length	1
2	9002933	Armrest - V2 Armrest Structure, 8-12 in, Gel Pad, Full Length, Right	1
3	9002935	Armrest - V2 Armrest Structure, 8-12 in, Gel Pad, Full Length, Left	1
4	9002934	Armrest - V2 Armrest Structure, 10-14 in, Gel Pad, Full Length, Right	1
5	9002936	Armrest - V2 Armrest Structure, 10-14 in, Gel Pad, Full Length, Left	1

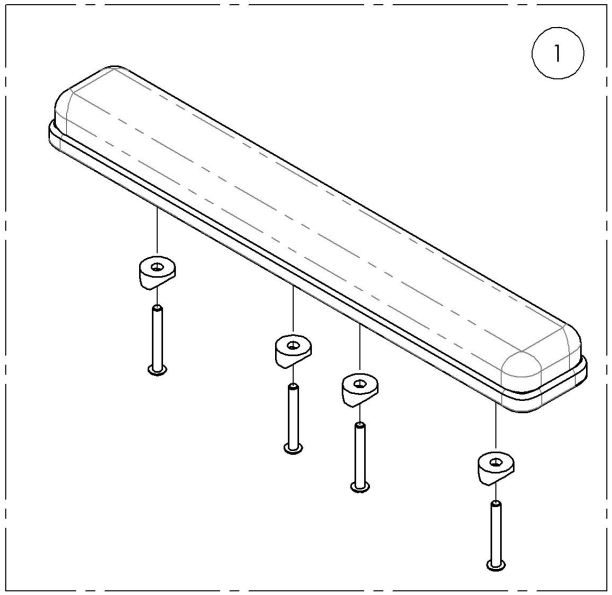

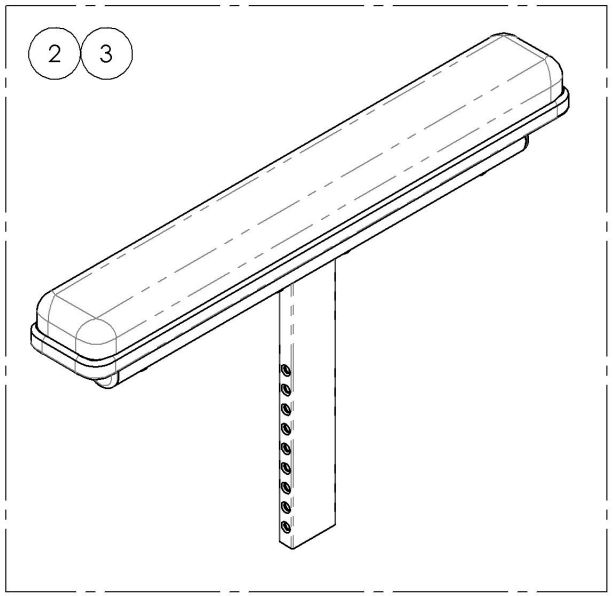

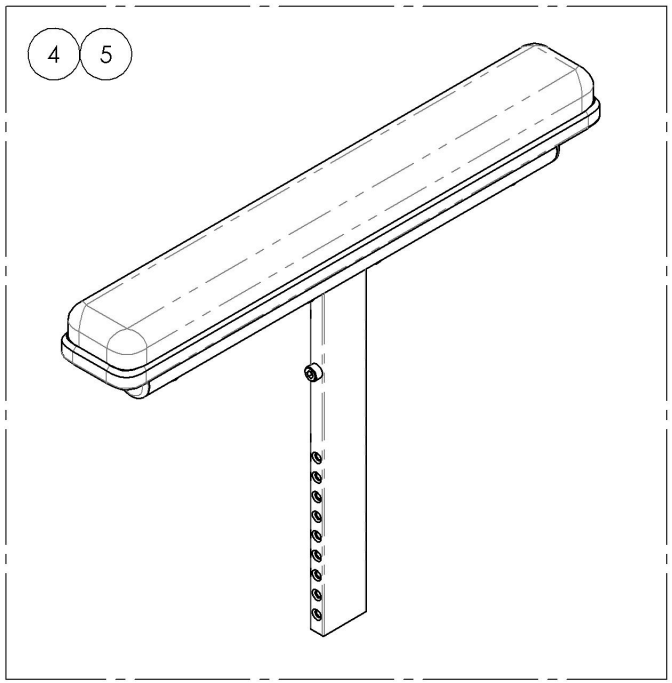

MAKE SURE TO HAVE YOUR SERIAL NUMBER NEARBY WHEN ORDERING PARTS FOR YOUR MOTION COMPOSITES WHEELCHAIR

9002933_9002934
Armrest - V2 Armrest Structure, Gel Pad, Full Length, Right

ITEM NO.	PARTNO	DESCRIPTION	9002933 /QTY.	9002934 /QTY.
1	33559	V2 ARMREST STRUCTURE 8-12" FOR FULL LENGTH - ASSEMBLY	1	-
2	33560	V2 ARMREST STRUCTURE 10-14" FOR FULL LENGTH - ASSEMBLY	-	1
3	33077	OVATION GEL ARMREST PAD 2x14in, FULL LENGTH	1	1

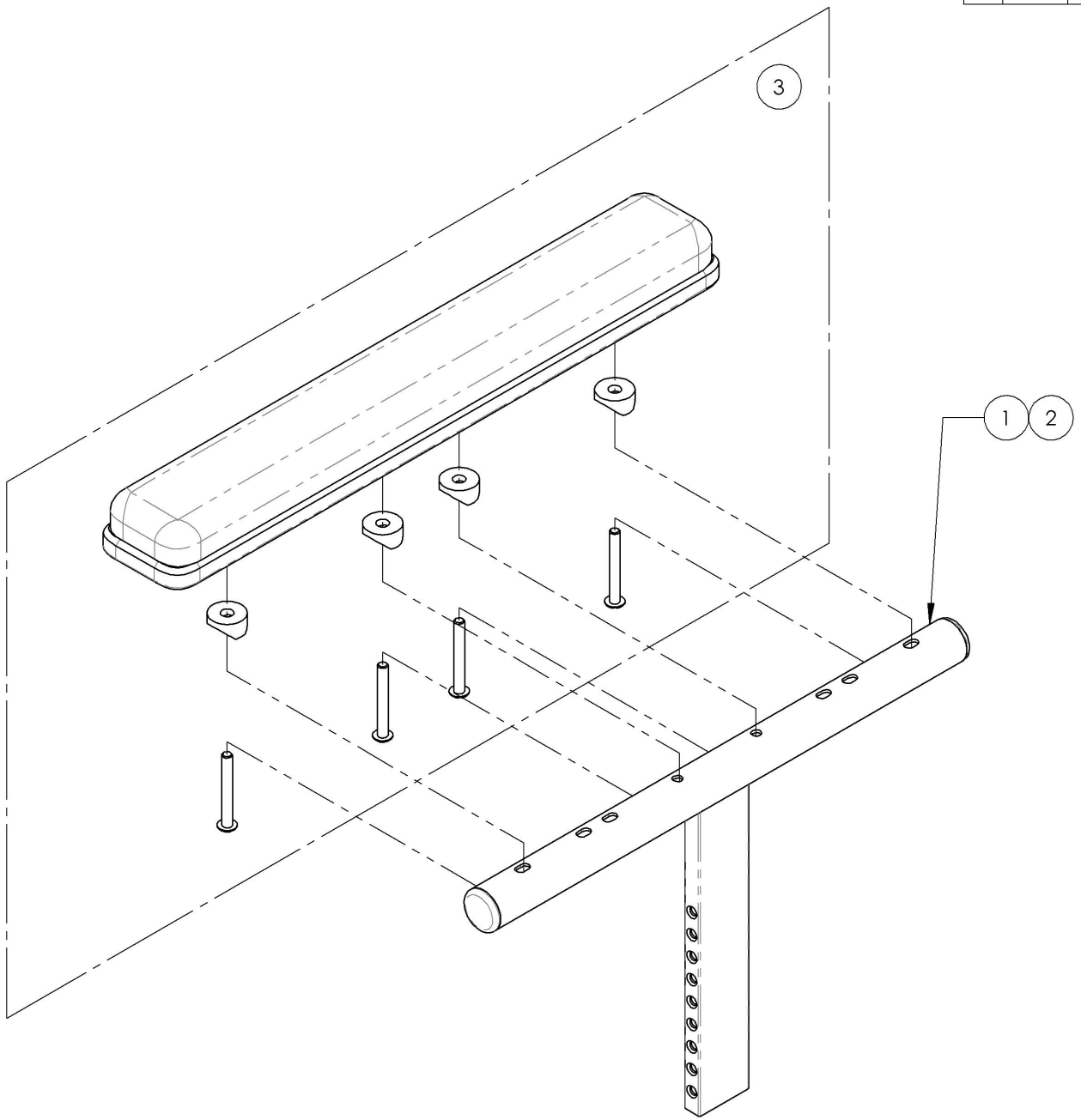

9002933
Armrest - V2 Armrest Structure, 8-12 in,
Gel Pad, Full Length, Right

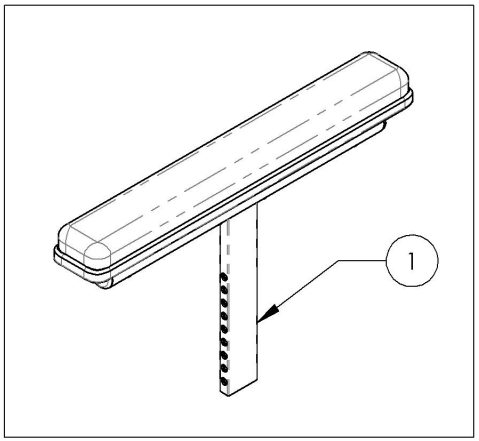

9002934
Armrest - V2 Armrest Structure, 10-14 in,
Gel Pad, Full Length, Right

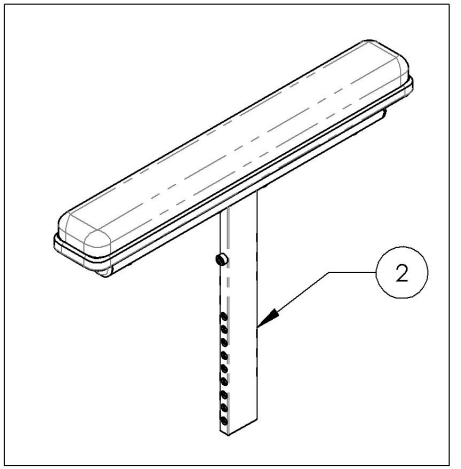

MAKE SURE TO HAVE YOUR SERIAL NUMBER NEARBY WHEN ORDERING PARTS FOR YOUR MOTION COMPOSITES WHEELCHAIR

9002935_9002936
Armrest - V2 Armrest Structure, Gel Pad, Full Length, Left

ITEM NO.	PARTNO	DESCRIPTION	9002935 /QTY.	9002936 /QTY.
1	33559	V2 ARMREST STRUCTURE 8-12" FOR FULL LENGTH - ASSEMBLY	1	-
2	33560	V2 ARMREST STRUCTURE 10-14" FOR FULL LENGTH - ASSEMBLY	-	1
3	33077	OVATION GEL ARMREST PAD 2x14in, FULL LENGTH	1	1

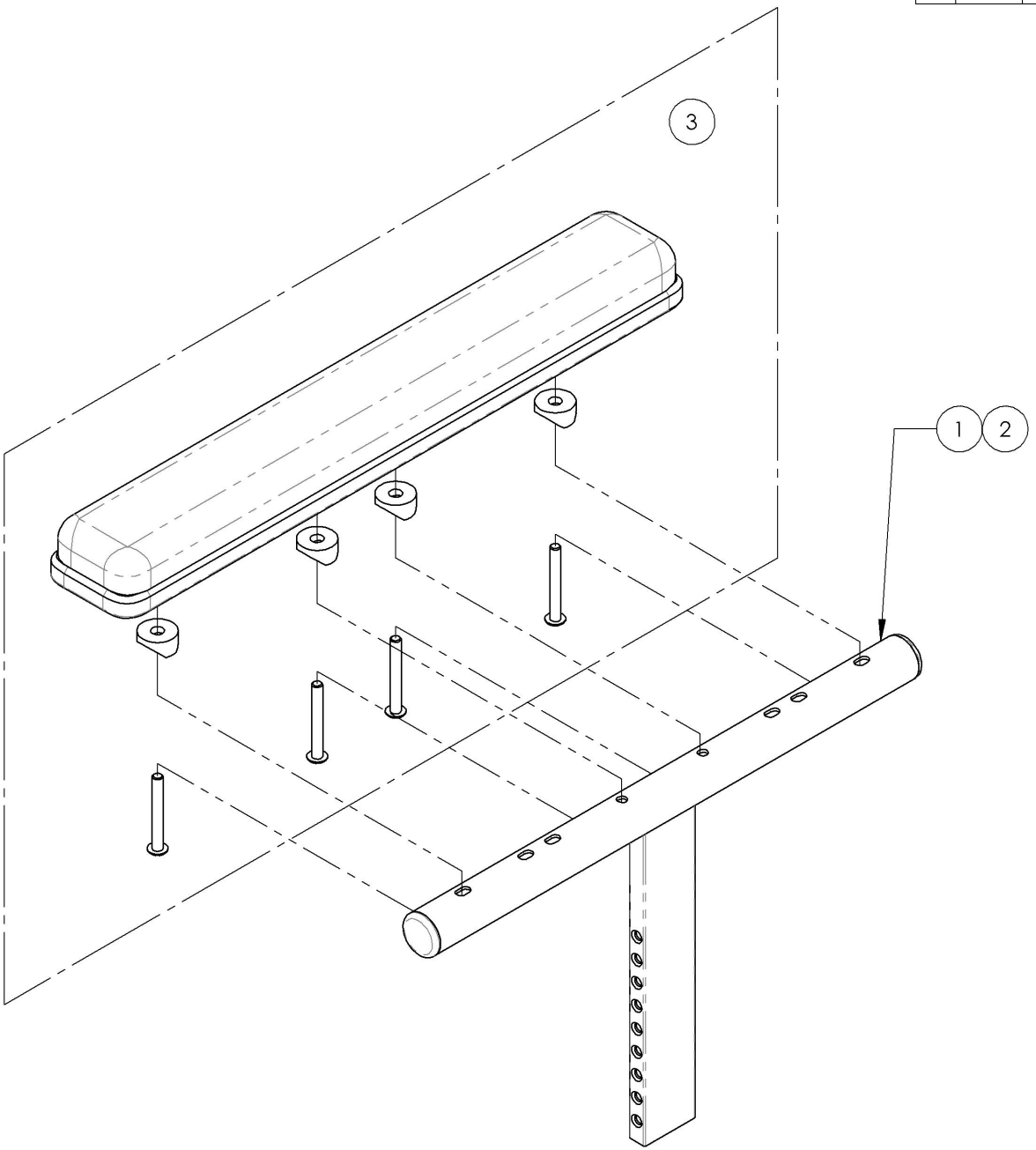

9002935
Armrest - V2 Armrest Structure, 8-12 in,
Gel Pad, Full Length, Left

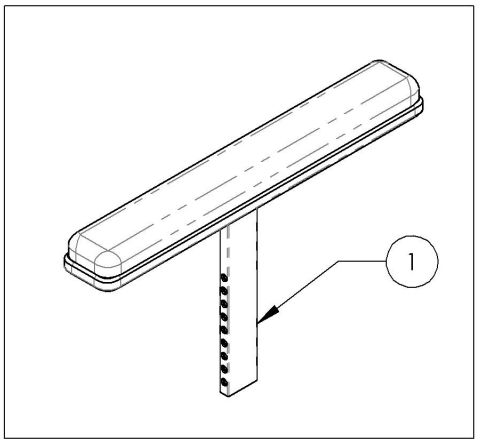

9002936
Armrest - V2 Armrest Structure, 10-14 in,
Gel Pad, Full Length, Left

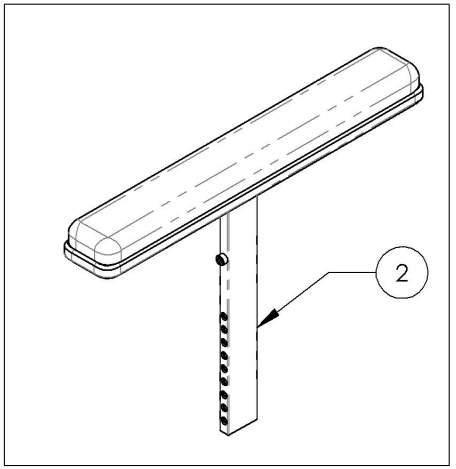

MAKE SURE TO HAVE YOUR SERIAL NUMBER NEARBY WHEN ORDERING PARTS FOR YOUR MOTION COMPOSITES WHEELCHAIR

Armrest Catalogue
Armrests - Flip Back Receiver

ITEM NO.	PARTNO	DESCRIPTION	QTY.
1 *	9001312	Armrest - Receiver, Flip Back & T Type	2
2	9001313	Armrest - Rear Pivot, Flip Back, Right	1
3	9001314	Armrest - Rear Pivot, Flip Back, Left	1

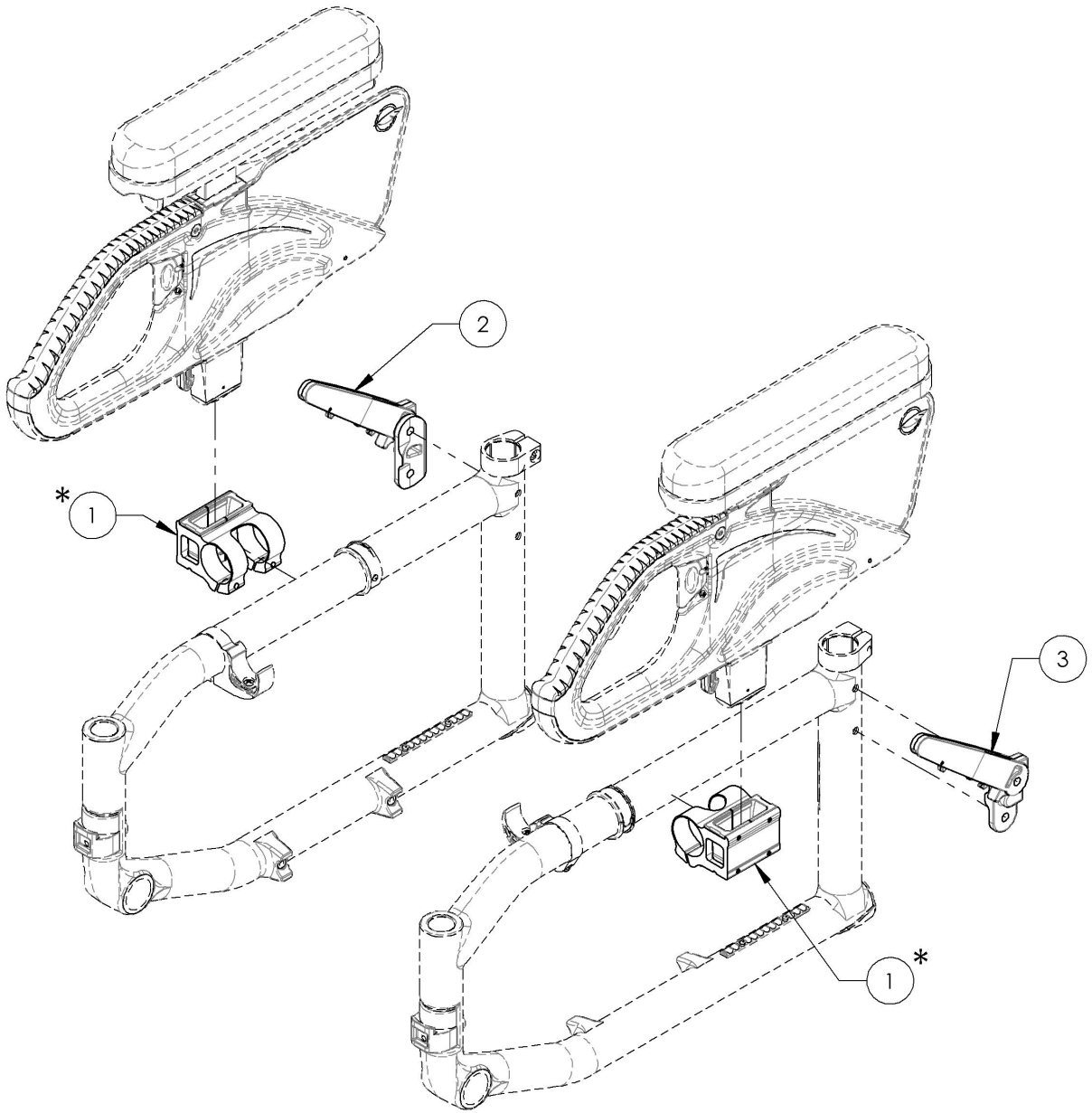

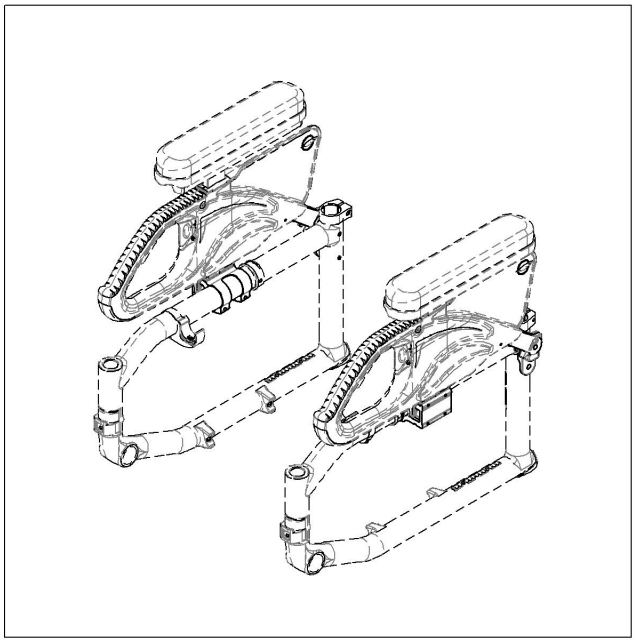

*:NOT AVAILABLE FOR MOVE WHEELCHAIRS

MAKE SURE TO HAVE YOUR SERIAL NUMBER NEARBY WHEN ORDERING PARTS FOR YOUR MOTION COMPOSITES WHEELCHAIR

9001312
Armrest - Receiver, Flip Back & T Type

ITEM NO.	PARTNO	DESCRIPTION	9001312 /QTY.
1	33555	V2 ARMREST RECEIVER - ASSEMBLY	1
2	90748	SOCKET CAP SCREW M5X0.8 X 18mm LONG, FULLY THREADED + BLUE TREADLOCKER - BLACK ZINC	2

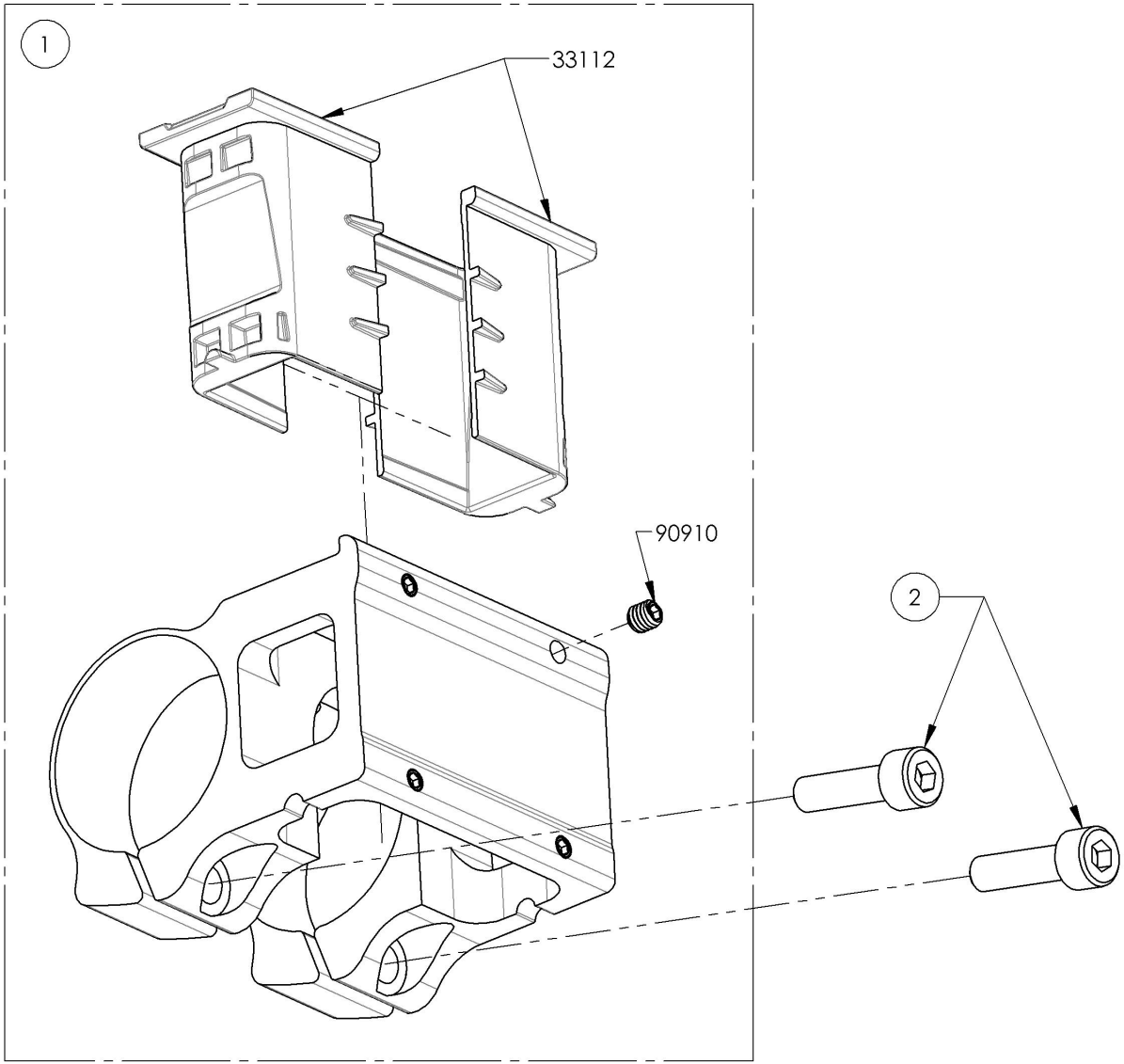

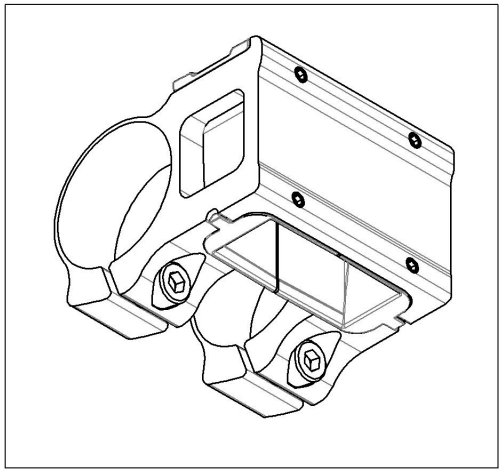

MAKE SURE TO HAVE YOUR SERIAL NUMBER NEARBY WHEN ORDERING PARTS FOR YOUR MOTION COMPOSITES WHEELCHAIR

9001313
Armrest - Rear Pivot, Flip Back, Type 2, Right

ITEM NO.	PARTNO	DESCRIPTION	9001313 /QTY.	REPLACEMENT PARTS/QTY.
1	33558	V2 ARMREST REAR PIVOT - ASSEMBLY	1	-
2	33561	V2 ARMREST DOUBLE HOOK TRIGGER - ASSEMBLY	-	1

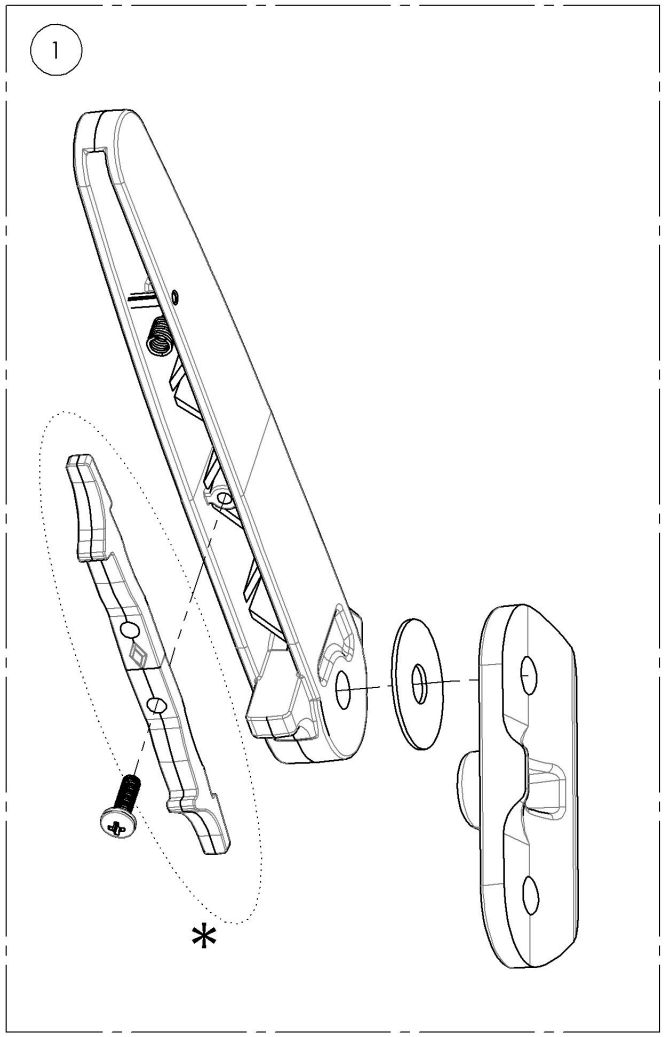

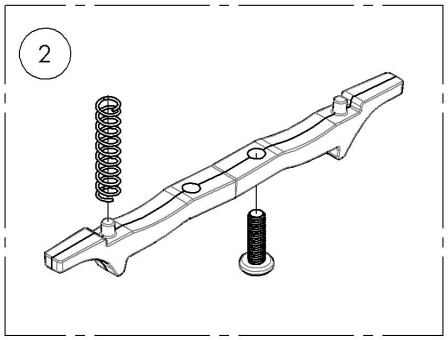

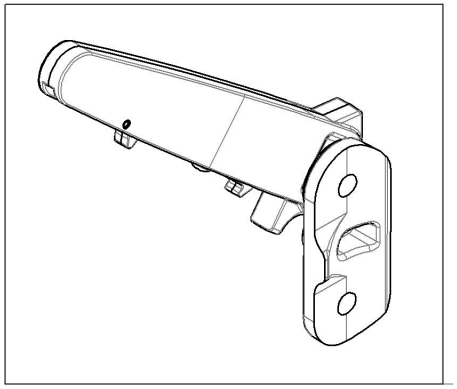

* DOUBLE TRIGGER INSTALLATION OPTIONS

STANDARD RELEASE	LOCK POSITION
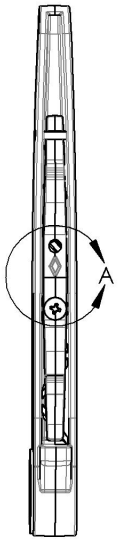	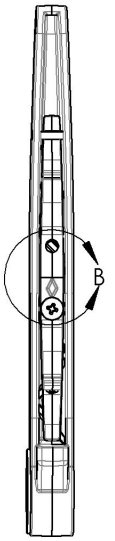
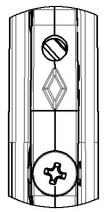 DETAIL A	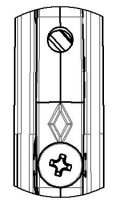 DETAIL B

NOTICE THE DIRECTION OF THE DIAMOND SHAPE ON THE TRIGGER, HIS DISTANCE FROM THE SCREW INDICATES THE CONFIGURATION USED

MAKE SURE TO HAVE YOUR SERIAL NUMBER NEARBY WHEN ORDERING PARTS FOR YOUR MOTION COMPOSITES WHEELCHAIR

9001314
Armrest - Rear Pivot, Flip Back, Type 2, Left

ITEM NO.	PARTNO	DESCRIPTION	9001314 /QTY.	REPLACEMENT PARTS/QTY.
1	33558	V2 ARMREST REAR PIVOT - ASSEMBLY	1	-
2	33561	V2 ARMREST DOUBLE HOOK TRIGGER - ASSEMBLY	-	1

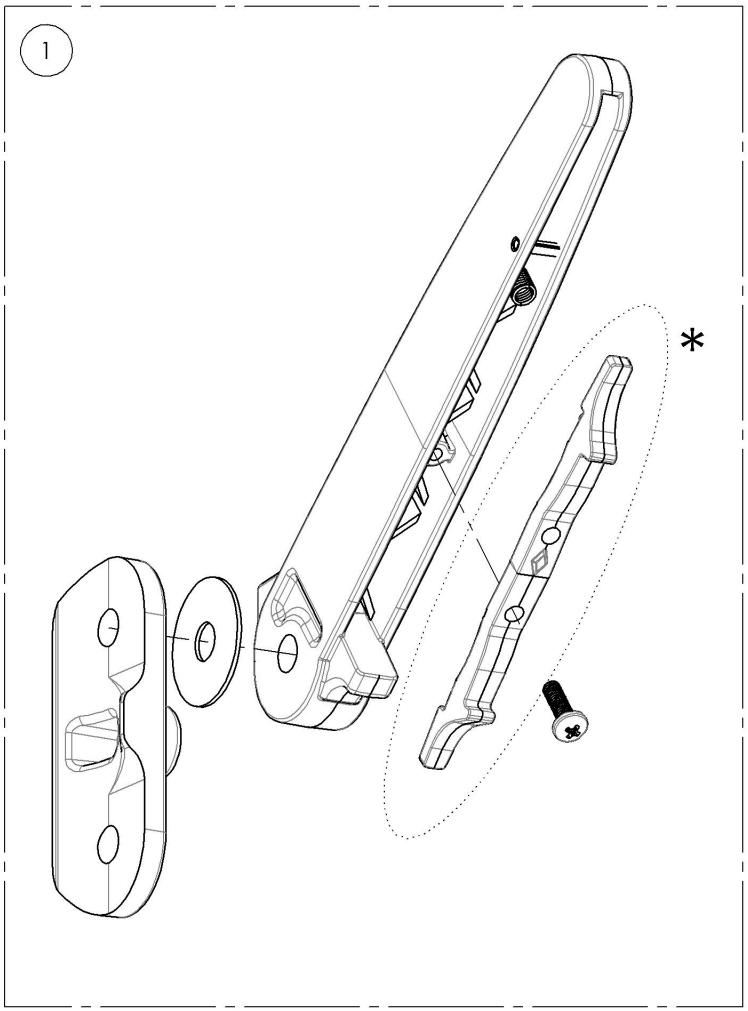

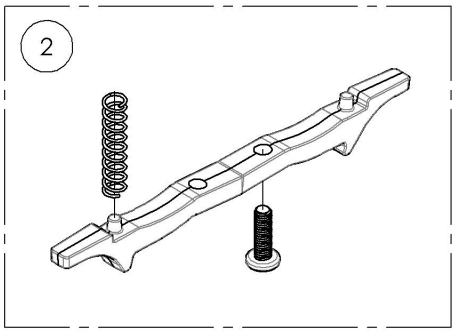

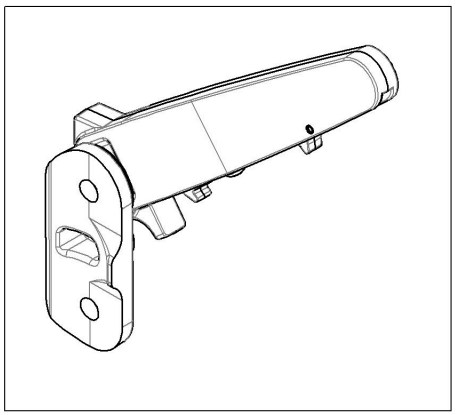

*DOUBLE TRIGGER INSTALLATION OPTIONS

STANDARD RELEASE	LOCK POSITION
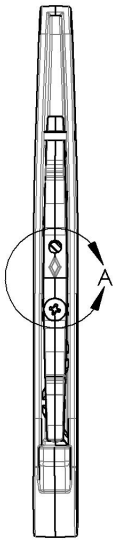	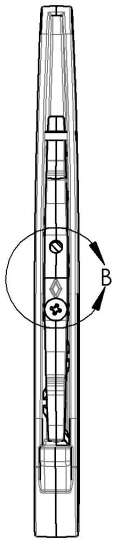
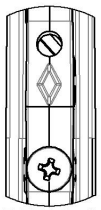 DETAIL A	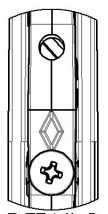 DETAIL B

NOTICE THE DIRECTION OF THE DIAMOND SHAPE ON THE TRIGGER, HIS DISTANCE FROM THE SCREW INDICATES THE CONFIGURATION USED

MAKE SURE TO HAVE YOUR SERIAL NUMBER NEARBY WHEN ORDERING PARTS FOR YOUR MOTION COMPOSITES WHEELCHAIR

Armrest Catalogue
Armrests - T Type Receiver

ITEM NO.	PARTNO	DESCRIPTION	QTY
1	9001312	Armrest - Receiver, Flip Back & T Type	2

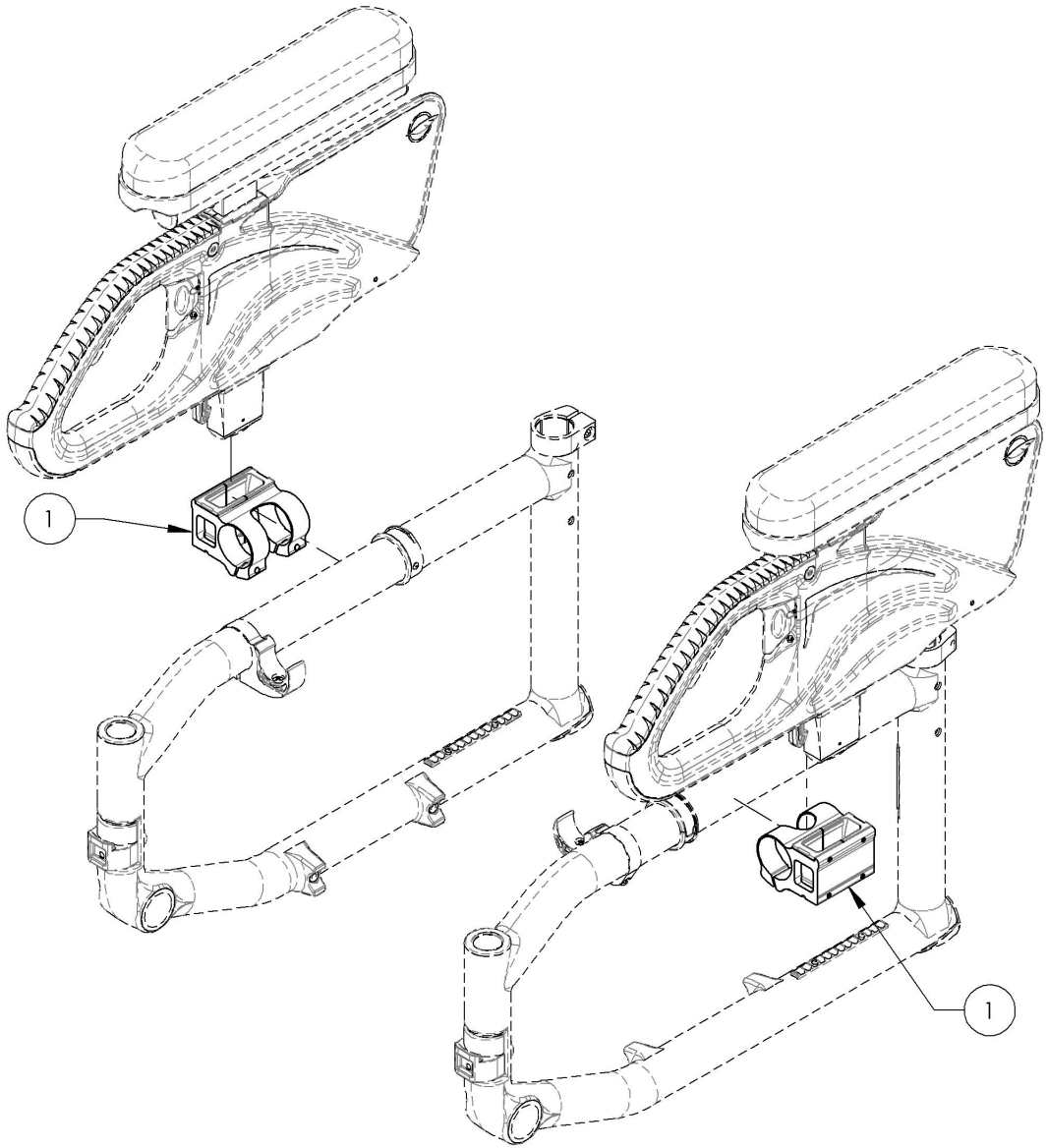

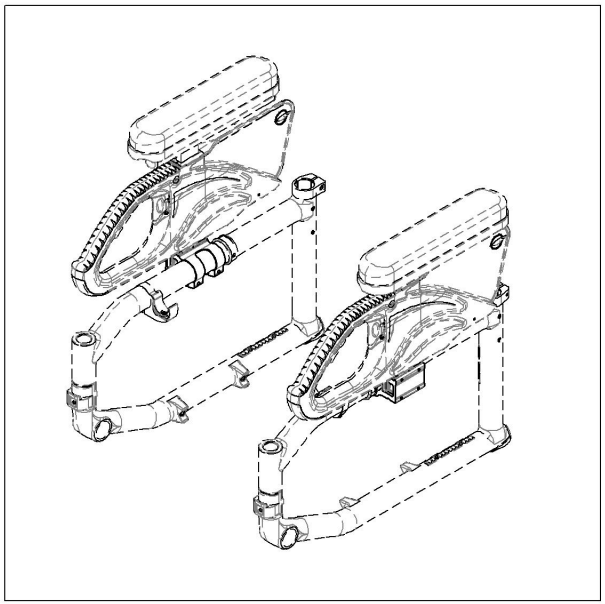

MAKE SURE TO HAVE YOUR SERIAL NUMBER NEARBY WHEN ORDERING PARTS FOR YOUR MOTION COMPOSITES WHEELCHAIR

9001312
Armrest - Receiver, Flip Back & T Type

ITEM NO.	PARTNO	DESCRIPTION	9001312 /QTY.
1	33555	V2 ARMREST RECEIVER - ASSEMBLY	1
2	90748	SOCKET CAP SCREW M5X0.8 X 18mm LONG, FULLY THREADED + BLUE TREADLOCKER - BLACK ZINC	2

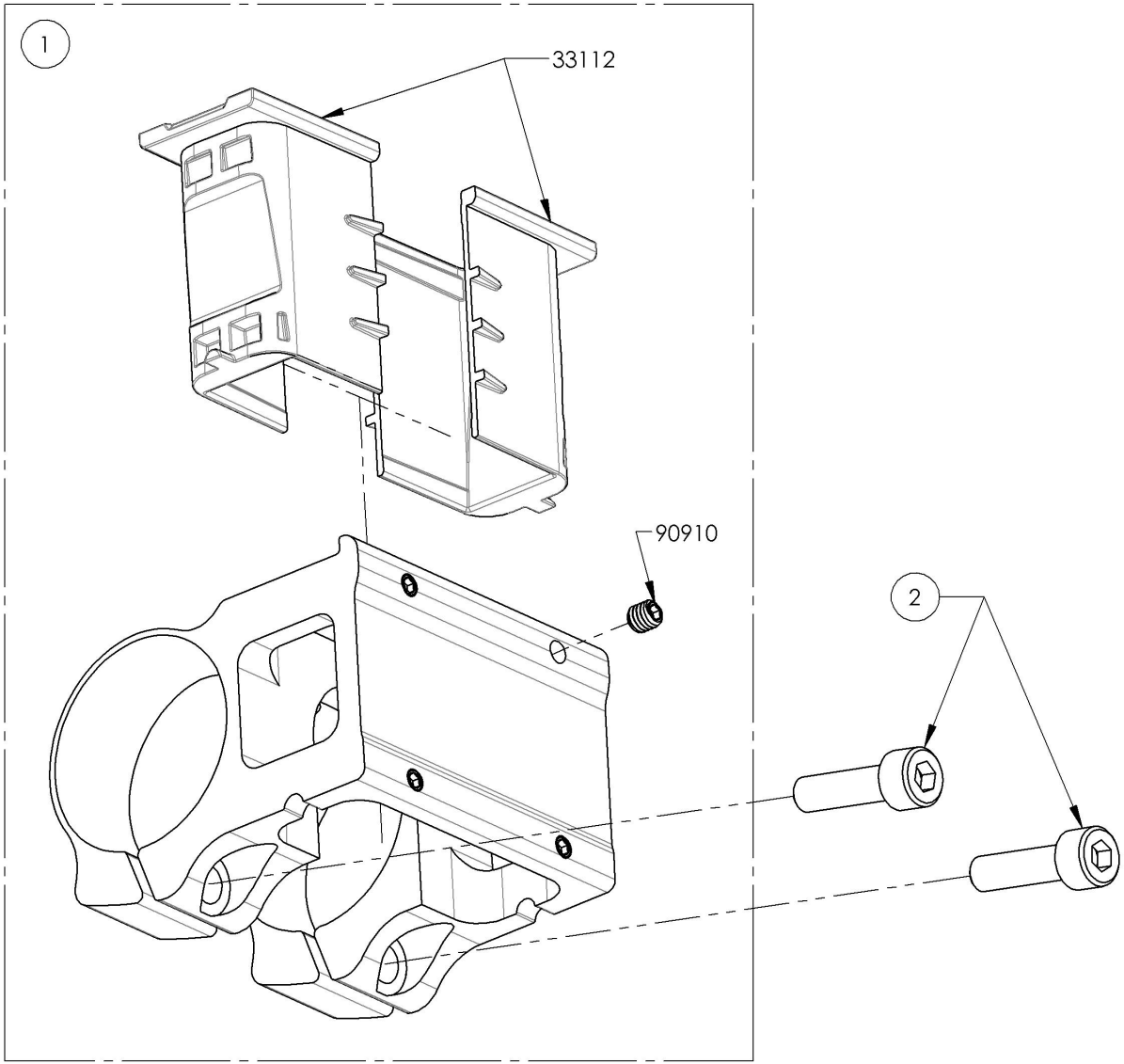

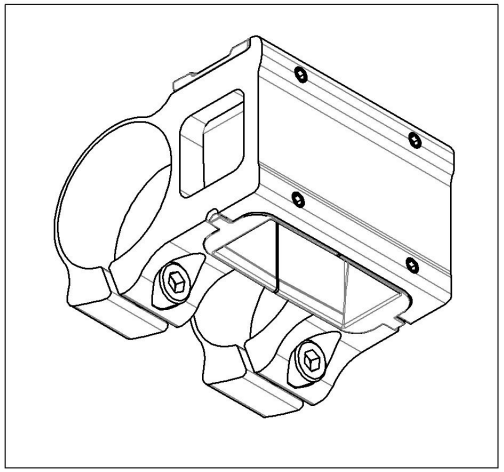

MAKE SURE TO HAVE YOUR SERIAL NUMBER NEARBY WHEN ORDERING PARTS FOR YOUR MOTION COMPOSITES WHEELCHAIR

Armrest Catalogue
Armrests - Swing Away Receiver

ITEM NO.	PARTNO	DESCRIPTION	QTY
1	9001315	Armrest - Receiver, Swing Away	2

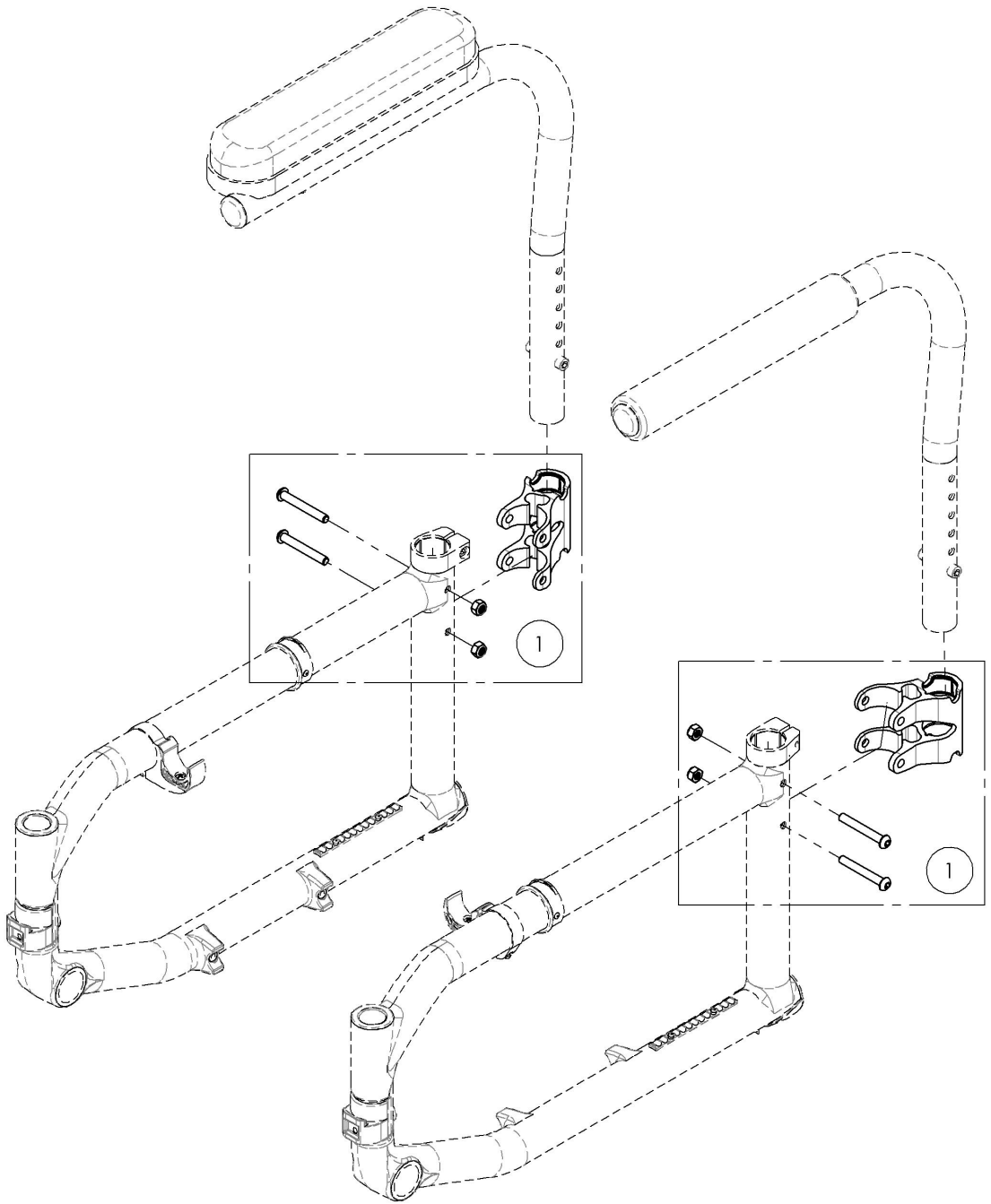

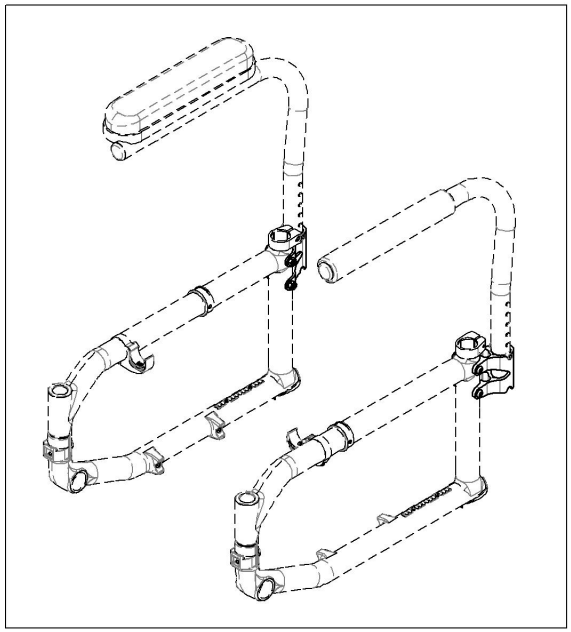

MAKE SURE TO HAVE YOUR SERIAL NUMBER NEARBY WHEN ORDERING PARTS FOR YOUR MOTION COMPOSITES WHEELCHAIR

9001315
Armrest - Receiver, Swing Away

ITEM NO.	PARTNO	DESCRIPTION	9001315 /QTY.
1	33538	L ARMREST HOUSING	1

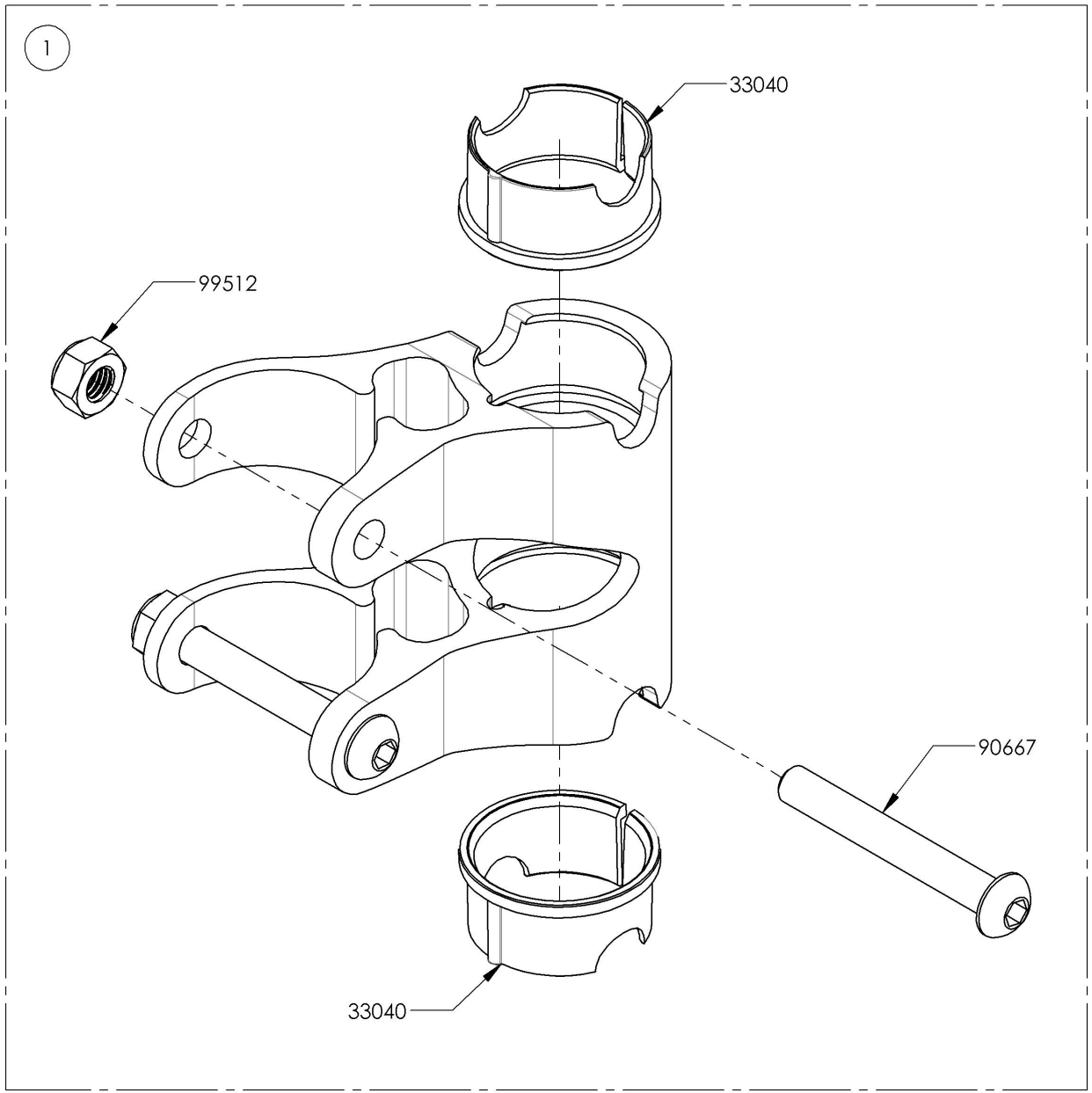

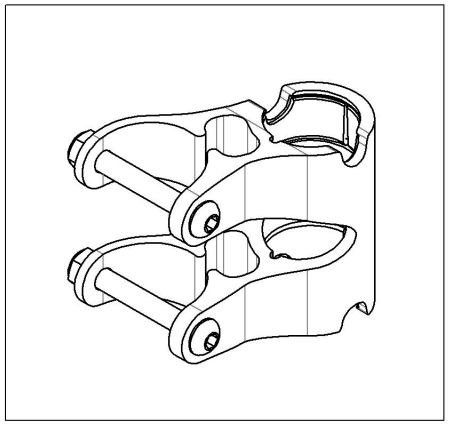

MAKE SURE TO HAVE YOUR SERIAL NUMBER NEARBY WHEN ORDERING PARTS FOR YOUR MOTION COMPOSITES WHEELCHAIR

Sideguard Catalogue
Sideguards

ITEM NO.	PARTNO	DESCRIPTION	QTY
1	9001295	Side Guard - Plastic, Removable, Right, Small	1
2	9001297	Side Guard - Plastic, Removable, Left, Small	1
3	9001296	Side Guard - Plastic, Removable, Right, Medium	1
4	9001298	Side Guard - Plastic, Removable, Left, Medium	1
5	9002489	Removable Side Guard - Carbon Fiber, Right, Small	1
6	9002492	Removable Side Guard - Carbon Fiber, Left, Small	1
7	9002490	Removable Side Guard - Carbon Fiber, Right, Medium	1
8	9002493	Removable Side Guard - Carbon Fiber, Left, Medium	1
9	9002491	Removable Side Guard - Carbon Fiber, Right, Large	1
10	9002494	Removable Side Guard - Carbon Fiber, Left, Large	1
11*	9001289	Side Guard - Carbon Fiber, Fixed, Right, Small	1
12*	9001292	Side Guard - Carbon Fiber, Fixed, Left, Small	1
13*	9001290	Side Guard - Carbon Fiber, Fixed, Right, Medium	1
14*	9001293	Side Guard - Carbon Fiber, Fixed, Left, Medium	1
15*	9001291	Side Guard - Carbon Fiber, Fixed, Right, Large	1
16*	9001294	Side Guard - Carbon Fiber, Fixed, Left, Large	1

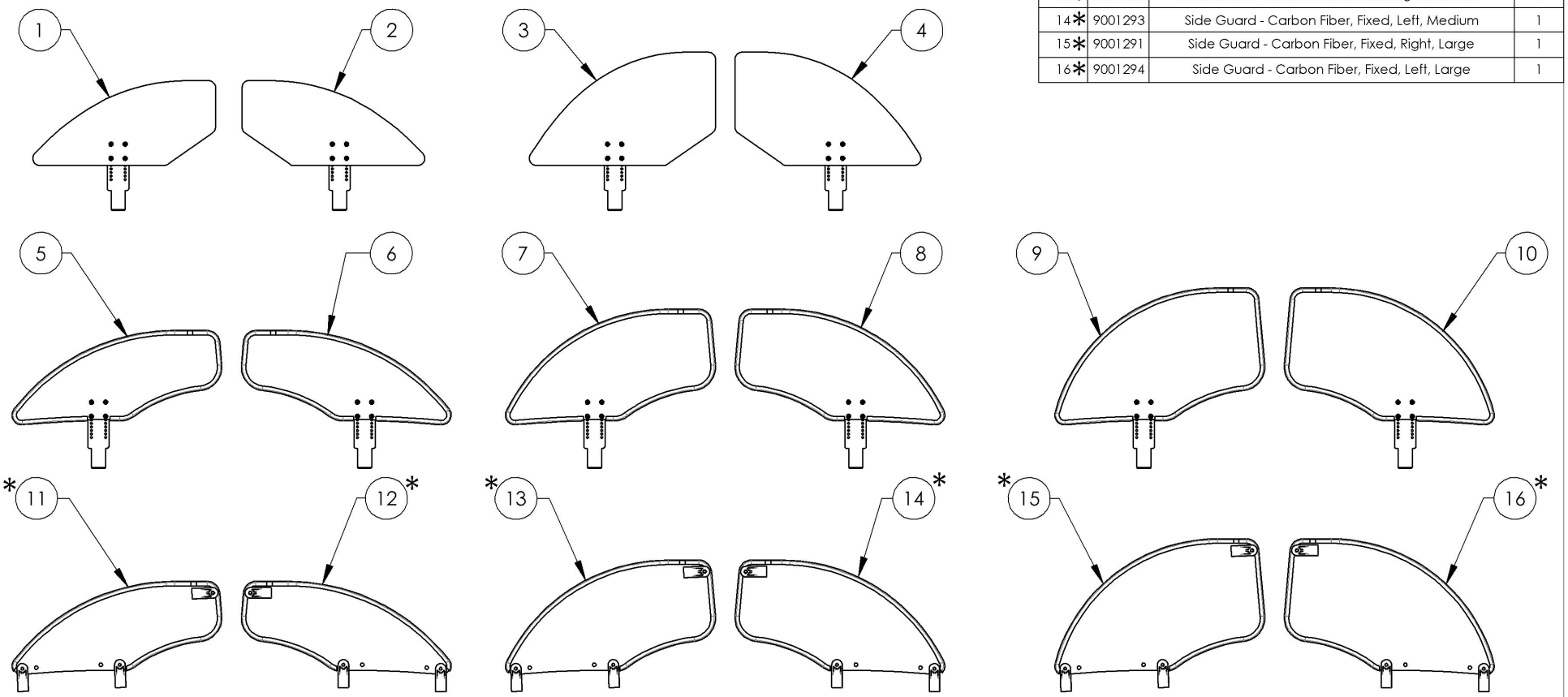

*:NOT AVAILABLE FOR KIDS & APEX WHEELCHAIRS

MAKE SURE TO HAVE YOUR SERIAL NUMBER NEARBY WHEN ORDERING PARTS FOR YOUR MOTION COMPOSITES WHEELCHAIR

9001295_9001296
Side Guard - Plastic, Removable, Right

ITEM NO.	PARTNO	DESCRIPTION	9001295 /QTY.	9001296 /QTY.
1	51002	RIGID PLASTIC SIDE GUARD SMALL - ASSEMBLY	1	-
2	51003	RIGID PLASTIC SIDE GUARD MEDIUM - ASSEMBLY	-	1
3	51118	MUDGUARD & SIDEGUARD ADJUSTING PLATE	1	1
4	90631	BUTTON HEAD CAP SCREW M4X0.7 X 8mm LONG, FULLY THREADED + BLUE THREADLOCKER - BLACK ZINC	4	4

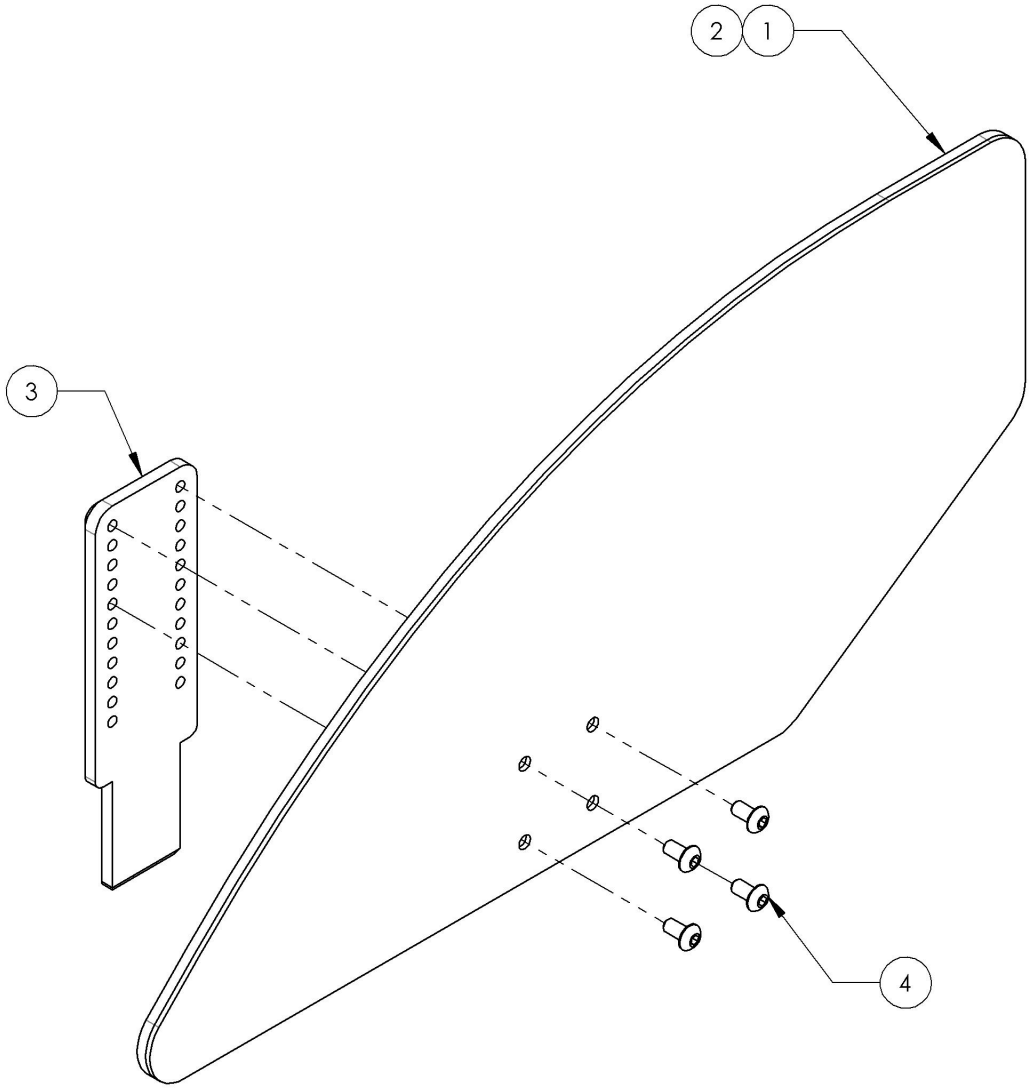

9001295
Side Guard - Plastic, Removable, Right, Small

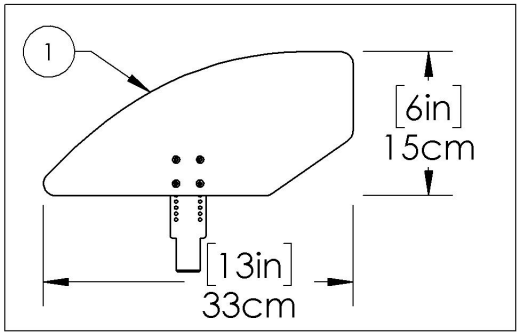

9001296
Side Guard - Plastic, Removable, Right, Medium

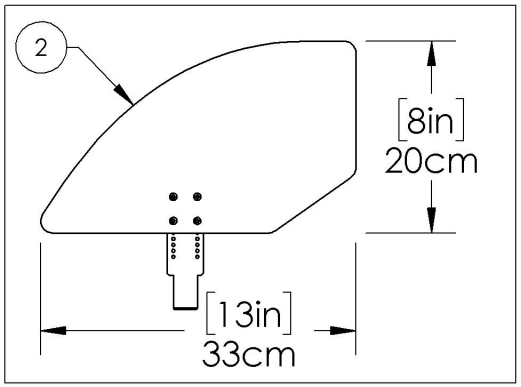

MAKE SURE TO HAVE YOUR SERIAL NUMBER NEARBY WHEN ORDERING PARTS FOR YOUR MOTION COMPOSITES WHEELCHAIR

9001297_9001298
Side Guard - Plastic, Removable, Left

ITEM NO.	PARTNO	DESCRIPTION	9001297 /QTY.	9001298 /QTY.
1	51002	RIGID PLASTIC SIDE GUARD SMALL - ASSEMBLY	1	-
2	51003	RIGID PLASTIC SIDE GUARD MEDIUM - ASSEMBLY	-	1
3	51118	MUDGUARD & SIDEGUARD ADJUSTING PLATE	1	1
4	90631	BUTTON HEAD CAP SCREW M4X0.7 X 8mm LONG, FULLY THREADED + BLUE THREADLOCKER - BLACK ZINC	4	4

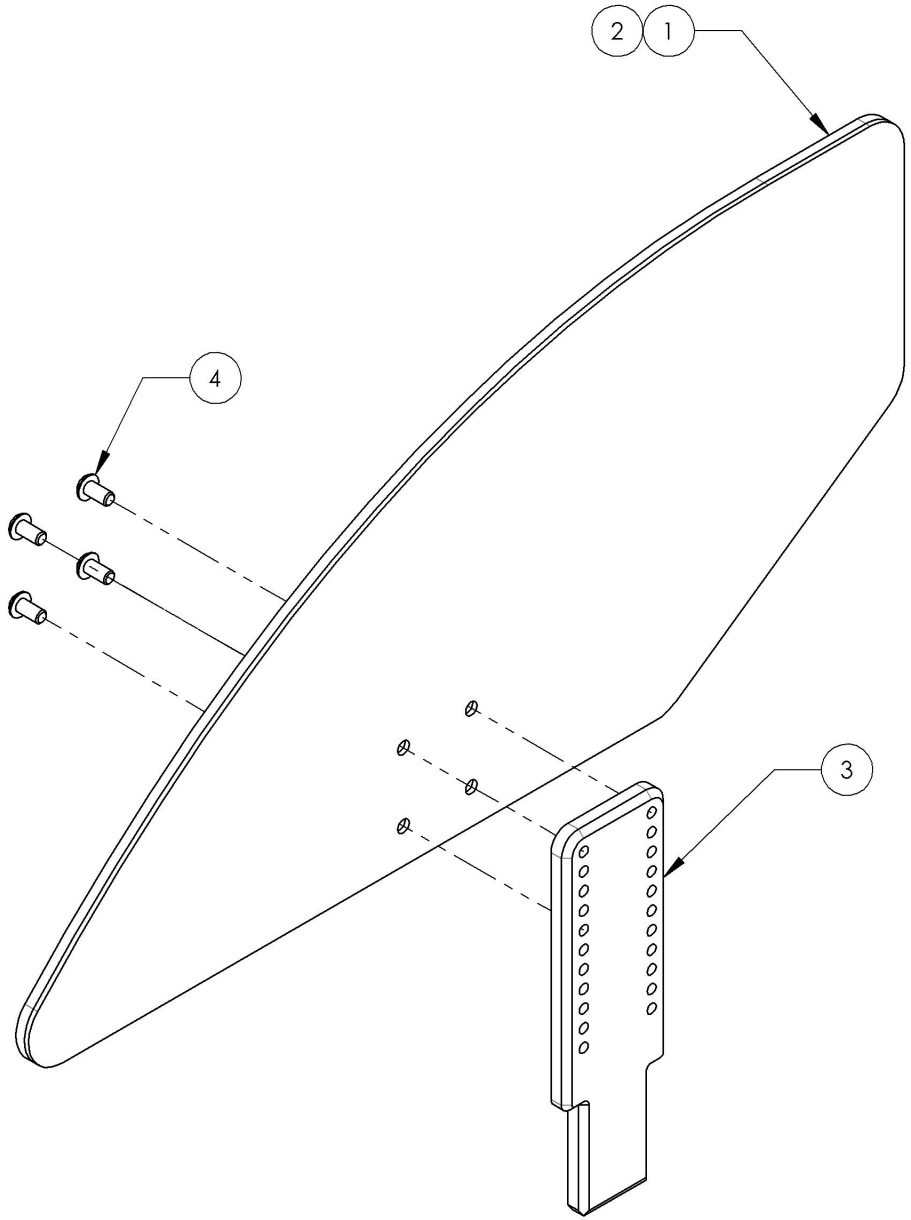

9001297
Side Guard - Plastic, Removable, Left, Small

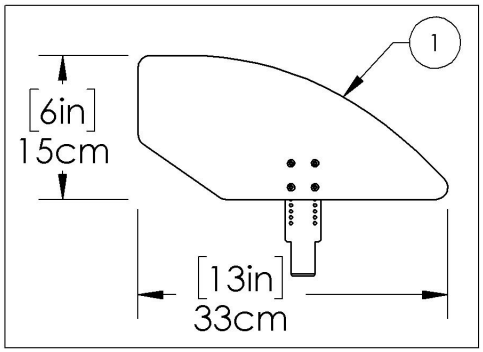

9001298
Side Guard - Plastic, Removable, Left, Medium

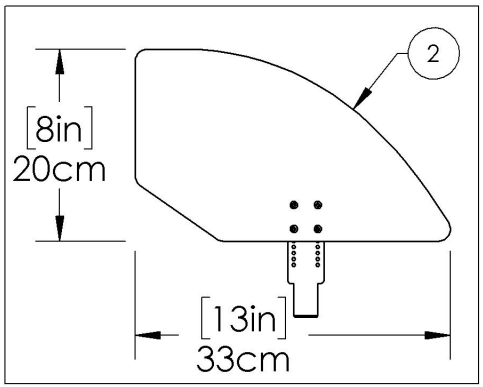

MAKE SURE TO HAVE YOUR SERIAL NUMBER NEARBY WHEN ORDERING PARTS FOR YOUR MOTION COMPOSITES WHEELCHAIR

9002489_9002491
Side Guard - Carbon Fiber, Removable, Right

ITEM NO.	PARTNO	DESCRIPTION	9002489 /QTY.	9002490 /QTY.	9002491 /QTY.
1	51213	SMALL AJUSTABLE CARBON FIBER SIDEGUARD, H-165mm L-372mm - ASSEMBLY	1	-	-
2	51214	MEDIUM AJUSTABLE CARBON FIBER SIDEGUARD, H-203mm L-372mm - ASSEMBLY	-	1	-
3	51215	LARGE AJUSTABLE CARBON FIBER SIDEGUARD, H-241mm L-372mm - ASSEMBLY	-	-	1
4	51118	MUDGUARD & SIDEGUARD ADJUSTING PLATE	1	1	1
5	90631	BUTTON HEAD CAP SCREW M4X0.7 X 8mm LONG, FULLY THREADED + BLUE THREADLOCKER - BLACK ZINC	4	4	4

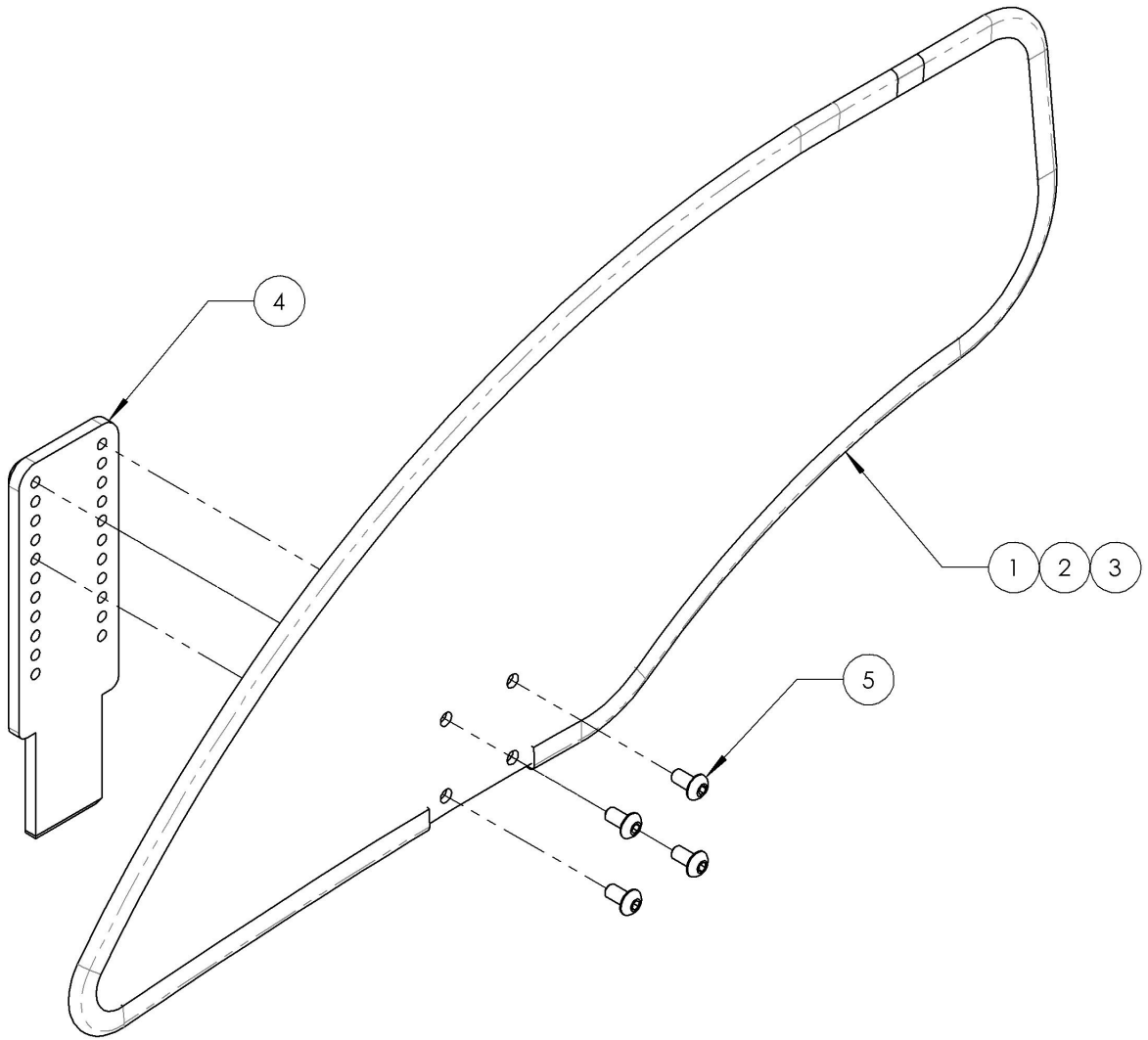

9002489
Side Guard - Carbon Fiber, Removable, Right, Small

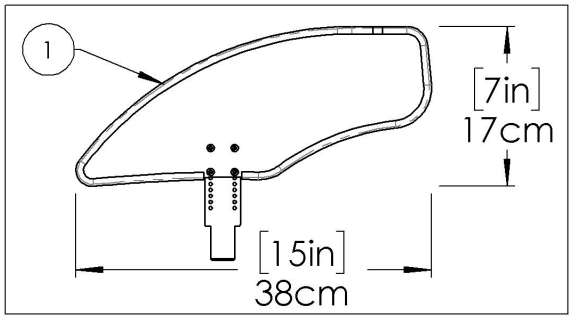

9002490
Side Guard - Carbon Fiber, Removable, Right, Medium

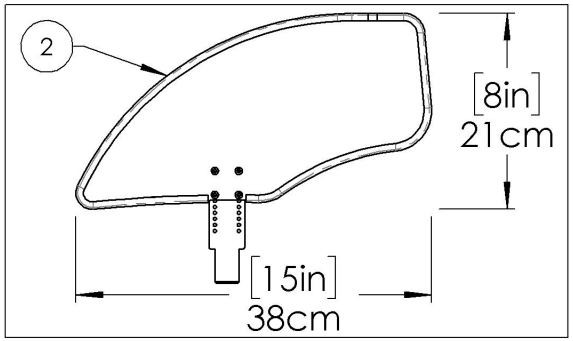

9002491
Side Guard - Carbon Fiber, Removable, Right, Large

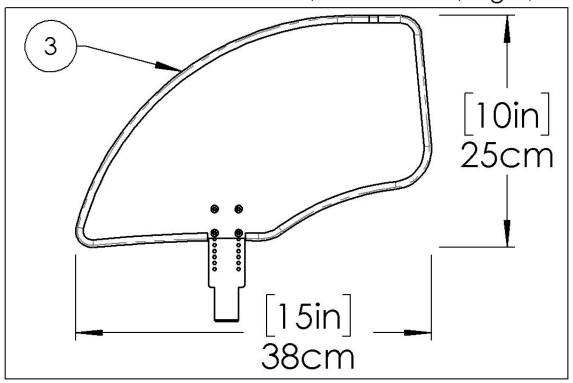

MAKE SURE TO HAVE YOUR SERIAL NUMBER NEARBY WHEN ORDERING PARTS FOR YOUR MOTION COMPOSITES WHEELCHAIR

9002492_9002494
Side Guard - Carbon Fiber, Removable, Left,

ITEM NO.	PARTNO	DESCRIPTION	9002492 /QTY.	9002493 /QTY.	9002494 /QTY.
1	51213	SMALL AJUSTABLE CARBON FIBER SIDEGUARD, H-165mm L-372mm - ASSEMBLY	1	-	-
2	51214	MEDIUM AJUSTABLE CARBON FIBER SIDEGUARD, H-203mm L-372mm - ASSEMBLY	-	1	-
3	51215	LARGE AJUSTABLE CARBON FIBER SIDEGUARD, H-241mm L-372mm - ASSEMBLY	-	-	1
4	51118	MUDGUARD & SIDEGUARD ADJUSTING PLATE	1	1	1
5	90631	BUTTON HEAD CAP SCREW M4X0.7 X 8mm LONG, FULLY THREADED + BLUE THREADLOCKER - BLACK ZINC	4	4	4

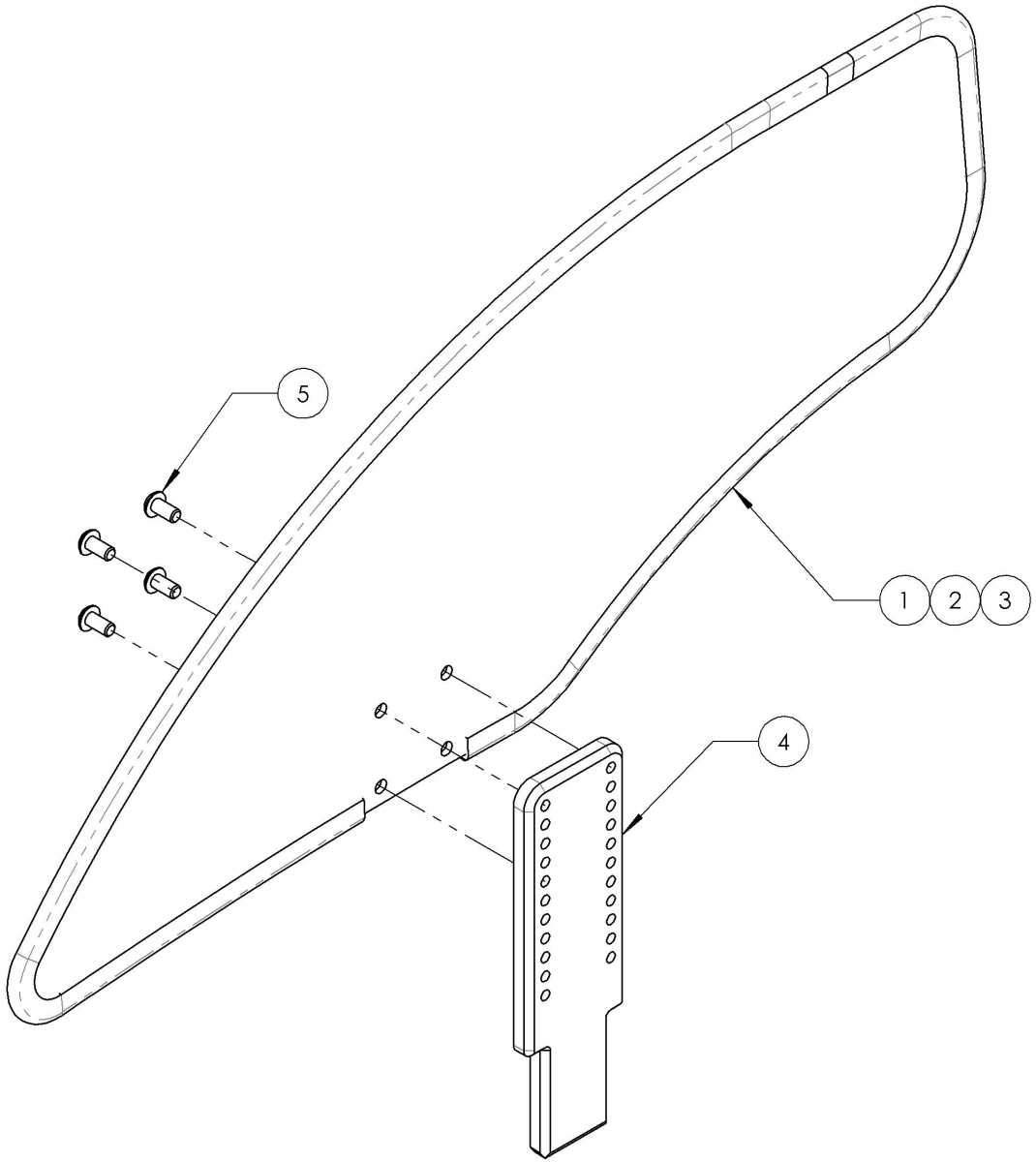

MAKE SURE TO HAVE YOUR SERIAL NUMBER NEARBY WHEN ORDERING PARTS FOR YOUR MOTION COMPOSITES WHEELCHAIR

9002492
Side Guard - Carbon Fiber, Removable, Left, Small

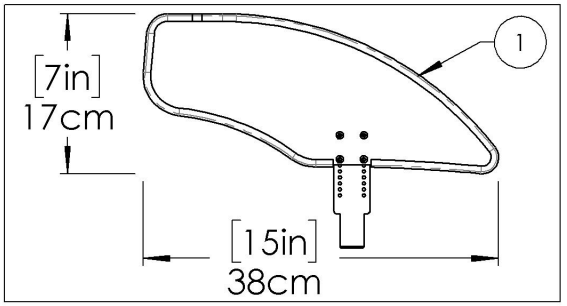

9002493
Side Guard - Carbon Fiber, Removable, Left, Medium

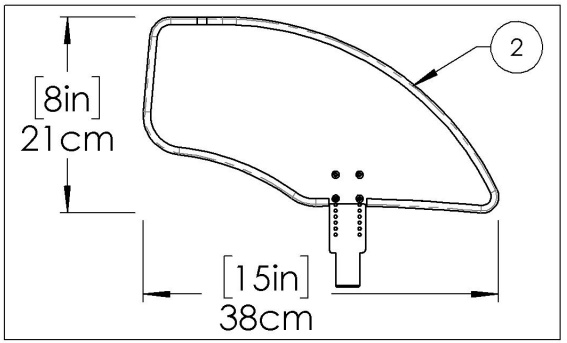

9002494
Side Guard - Carbon Fiber, Removable, Left, Large

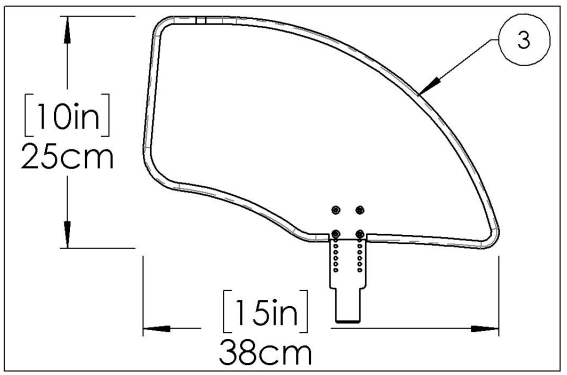

9001289_9001291
Side Guard - Carbon Fiber, Fixed, Right

ITEM NO.	PARTNO	DESCRIPTION	9001289 /QTY.	9001290 /QTY.	9001291 /QTY.
1	51112	SMALL FIXED CARBON FIBER SIDEGUARD, H-165mm L-372mm - ASSEMBLY	1	-	-
2	51113	MEDIUM FIXED CARBON FIBER SIDEGUARD, H-203mm L-372mm - ASSEMBLY	-	1	-
3	51114	LARGE FIXED CARBON FIBER SIDEGUARD, H-241mm L-372mm - ASSEMBLY	-	-	1
4	60201	FRAME SAVER	2	2	2
5	60202	FRAME SAVER 1in	1	1	1
6	90665	BUTTON HEAD CAP SCREW M6X1 X 35mm LONG, 24mm THREADED + BLUE THREADLOCKER - BLACK ZINC	3	3	3

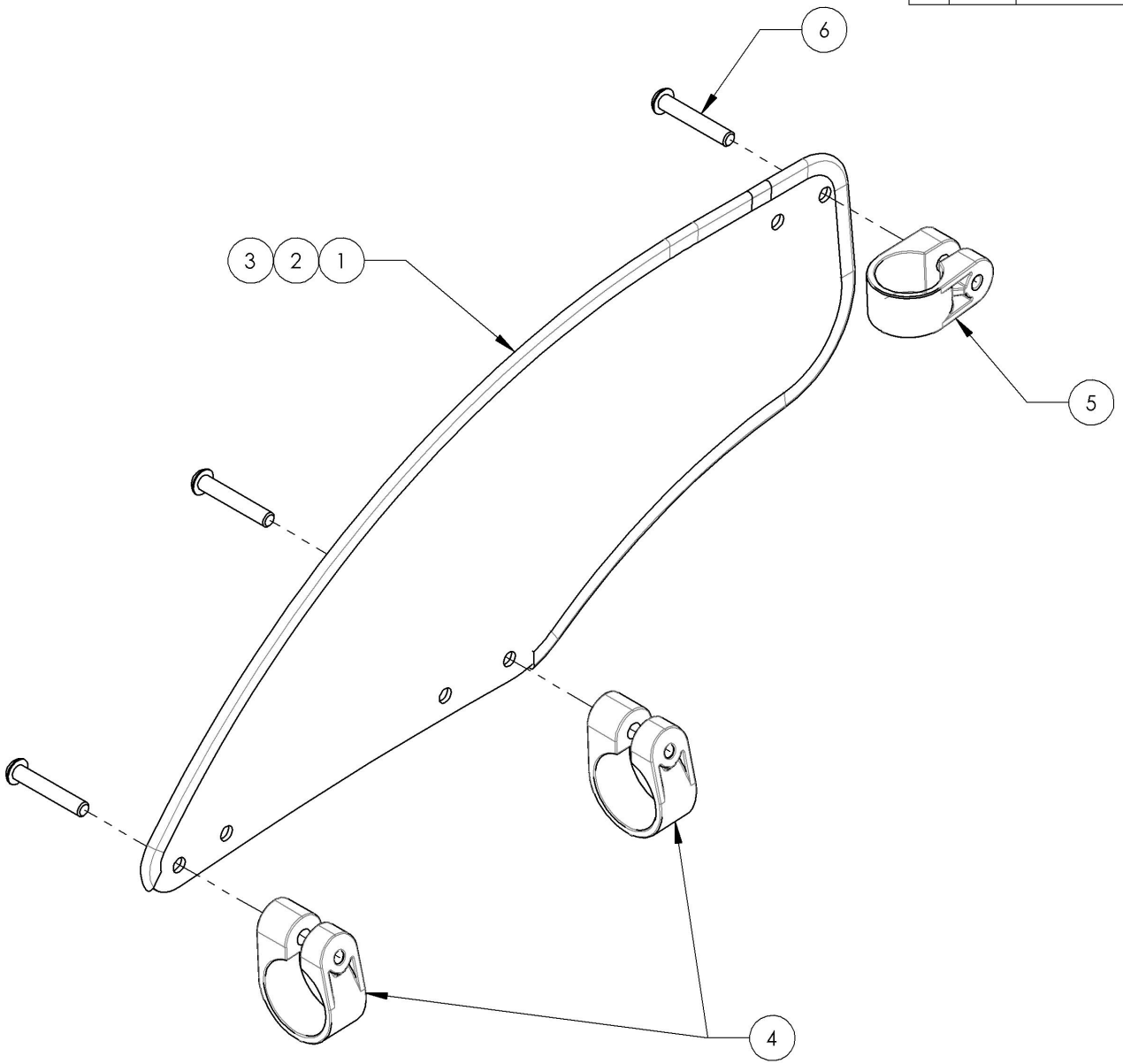

9001289
Side Guard - Carbon Fiber, Fixed, Right, Small

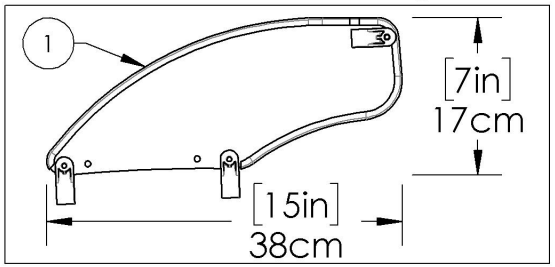

9001290
Side Guard - Carbon Fiber, Fixed, Right, Medium

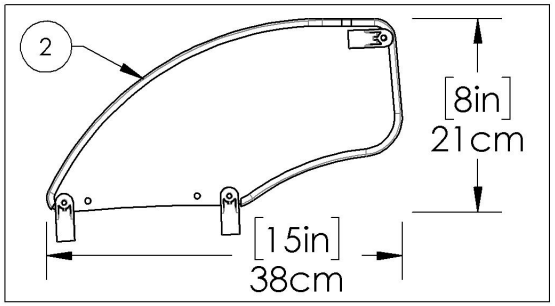

9001291
Side Guard - Carbon Fiber, Fixed, Right, Large

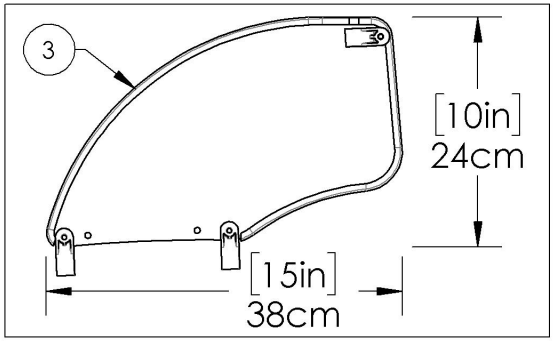

MAKE SURE TO HAVE YOUR SERIAL NUMBER NEARBY WHEN ORDERING PARTS FOR YOUR MOTION COMPOSITES WHEELCHAIR

9001292_9001294
Side Guard - Carbon Fiber, Fixed, Left

ITEM NO.	PARTNO	DESCRIPTION	9001292 /QTY.	9001293 /QTY.	9001294 /QTY.
1	51112	SMALL FIXED CARBON FIBER SIDEGUARD, H-165mm L-372mm - ASSEMBLY	1	-	-
2	51113	MEDIUM FIXED CARBON FIBER SIDEGUARD, H-203mm L-372mm - ASSEMBLY	-	1	-
3	51114	LARGE FIXED CARBON FIBER SIDEGUARD, H-241mm L-372mm - ASSEMBLY	-	-	1
4	60201	FRAME SAVER	2	2	2
5	60202	FRAME SAVER 1in	1	1	1
6	90665	BUTTON HEAD CAP SCREW M6X1 X 35mm LONG, 24mm THREADED + BLUE THREADLOCKER - BLACK ZINC	3	3	3

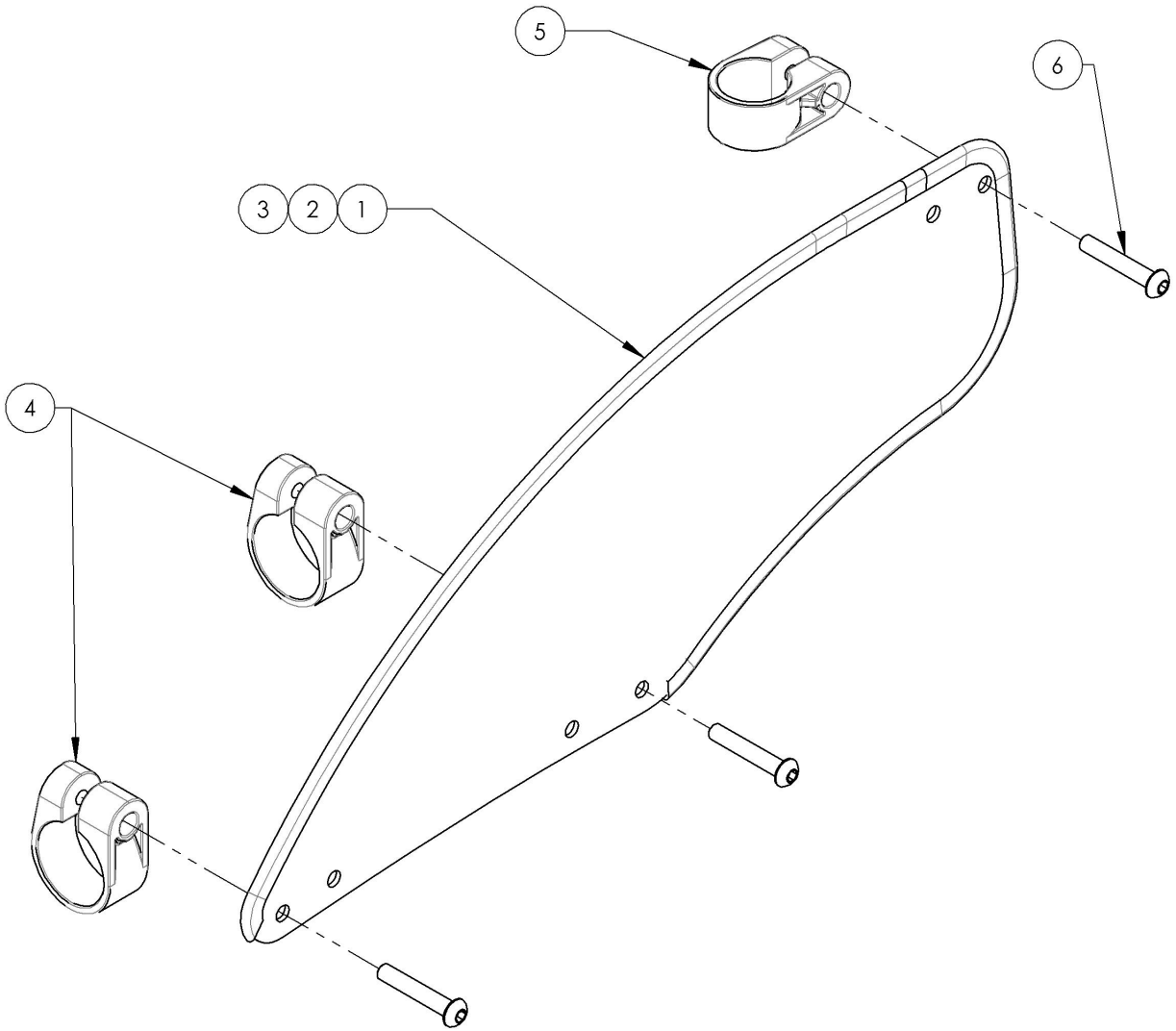

9001292
Side Guard - Carbon Fiber, Fixed, Left, Small

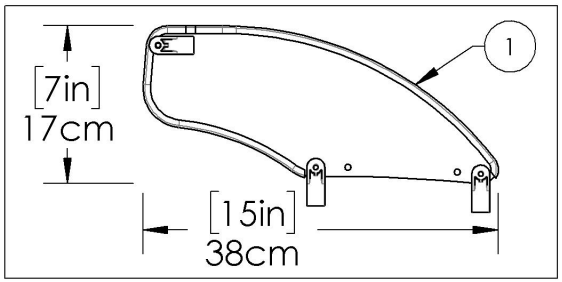

9001293
Side Guard - Carbon Fiber, Fixed, Left, Medium

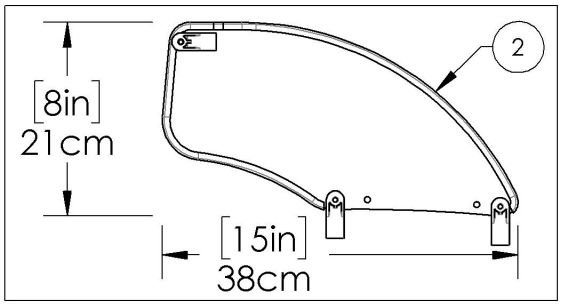

9001294
Side Guard - Carbon Fiber, Fixed, Left, Large

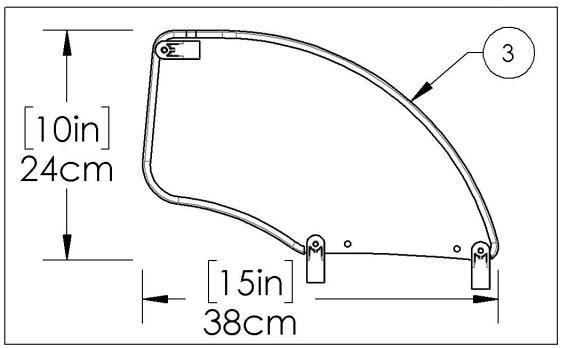

MAKE SURE TO HAVE YOUR SERIAL NUMBER NEARBY WHEN ORDERING PARTS FOR YOUR MOTION COMPOSITES WHEELCHAIR

Sideguard Catalogue
Fender Sideguards

ITEM NO.	PARTNO	DESCRIPTION	QTY.
1	9007630	Fender Sideguard - Plastic, Right, X-Small	1
2	9007634	Fender Sideguard - Plastic, Left, X-Small	1
3	9007631	Fender Sideguard - Plastic, Right, Small	1
4	9007635	Fender Sideguard - Plastic, Left, Small	1
5	9007632	Fender Sideguard - Plastic, Right, Medium	1
6	9007636	Fender Sideguard - Plastic, Left, Medium	1
7	9007633	Fender Sideguard - Plastic, Right, Large	1
8	9007637	Fender Sideguard - Plastic, Left, Large	1
9	9001319	Fender Sideguard - Carbon Fiber, Right, Small	1
10	9001322	Fender Sideguard - Carbon Fiber, Left, Small	1
11	9001320	Fender Sideguard - Carbon Fiber, Right, Medium	1
12	9001323	Fender Sideguard - Carbon Fiber, Left, Medium	1
13	9001321	Fender Sideguard - Carbon Fiber, Right, Large	1
14	9001324	Fender Sideguard - Carbon Fiber, Left, Large	1

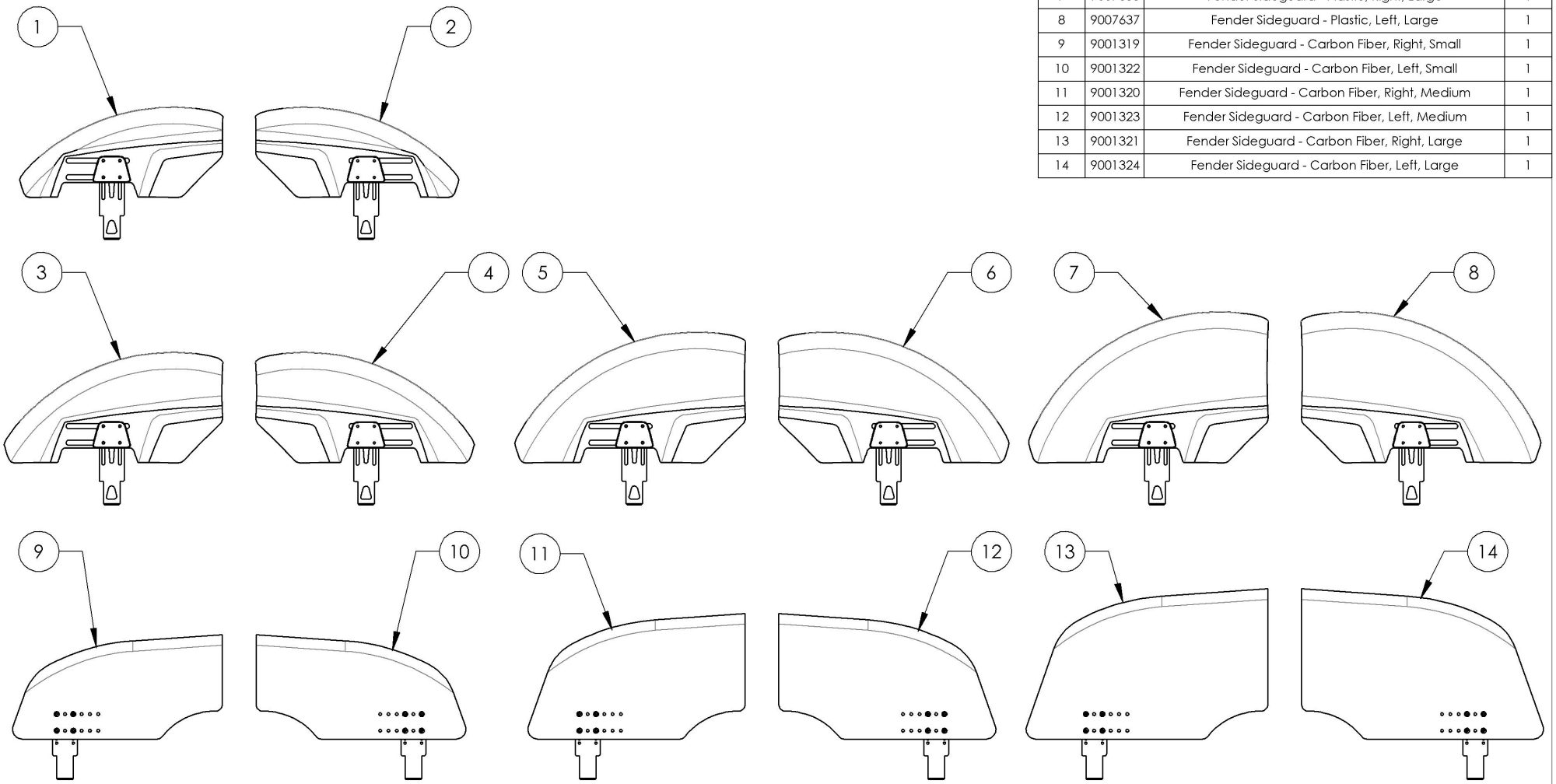

MAKE SURE TO HAVE YOUR SERIAL NUMBER NEARBY WHEN ORDERING PARTS FOR YOUR MOTION COMPOSITES WHEELCHAIR

9007630_9007633
Fender Sideguard - Plastic, Right

ITEM NO.	PARTNO	DESCRIPTION	9007630 /QTY.	9007631 /QTY.	9007632 /QTY.	9007633 /QTY.
1	51385	REMOVABLE FENDERED PLASTIC SIDEGUARDS X-SMALL, RIGHT	1	-	-	-
2	51386	REMOVABLE FENDERED PLASTIC SIDEGUARDS SMALL, RIGHT	-	1	-	-
3	51387	REMOVABLE FENDERED PLASTIC SIDEGUARDS MEDIUM, RIGHT	-	-	1	-
4	51388	REMOVABLE FENDERED PLASTIC SIDEGUARDS LARGE, RIGHT	-	-	-	1
5	51393	FENDERED SIDEGUARDS ADJUSTING PLATE	1	1	1	1
6	51395	FENDERED SIDEGUARDS INNER PLATE	1	1	1	1
7	90724	SOCKET CAP SCREW M4X0.7 X 10mm LONG, FULLY THREADED + BLUE TREADLOCKER - BLACK ZINC	4	4	4	4

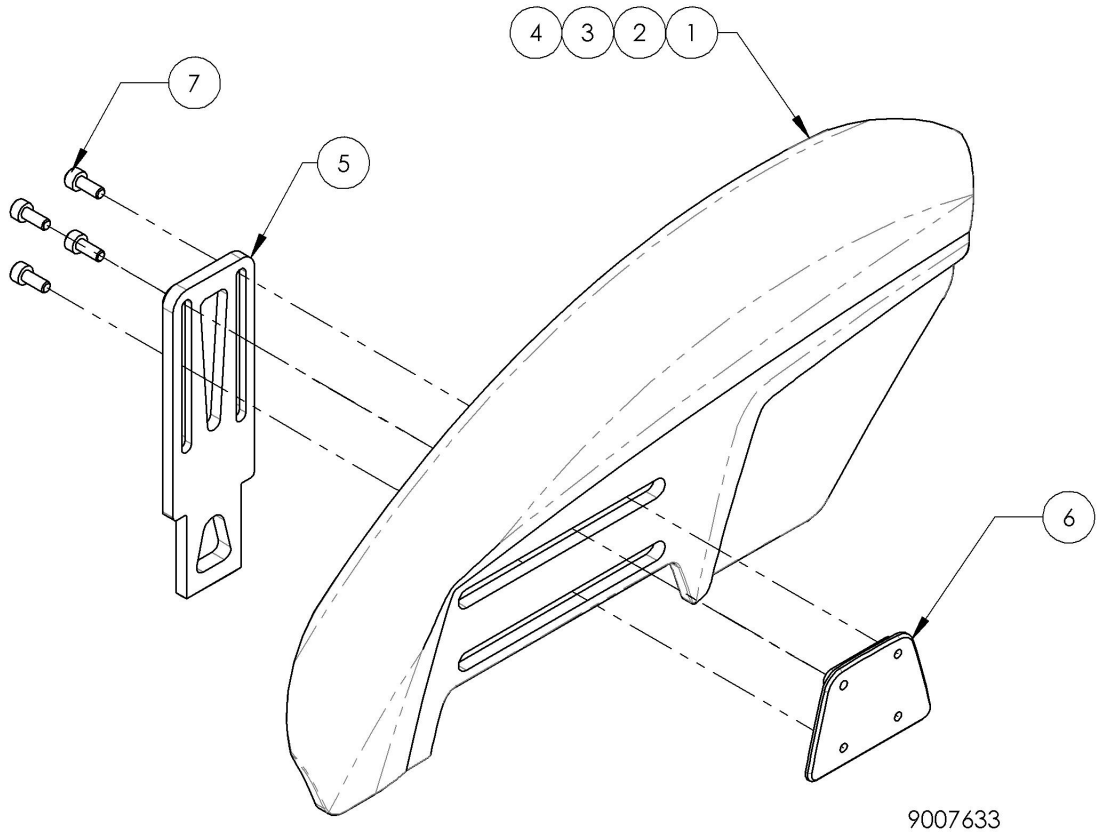

9007630
Fender Sideguard - Plastic, Right, X-Small

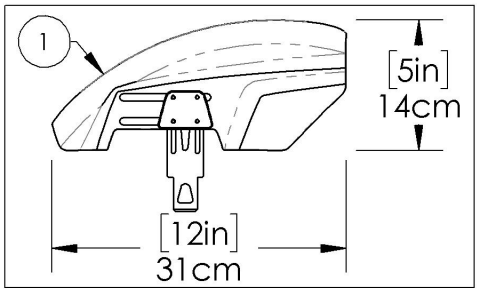

9007631
Fender Sideguard - Plastic, Right, Small

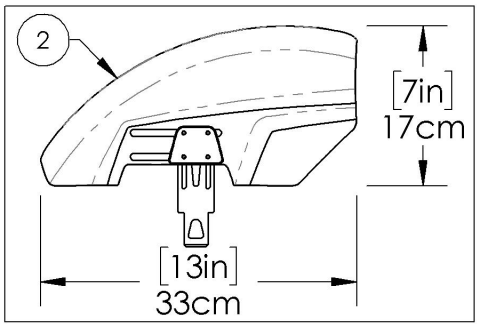

9007633
Fender Sideguard - Plastic, Right, Large

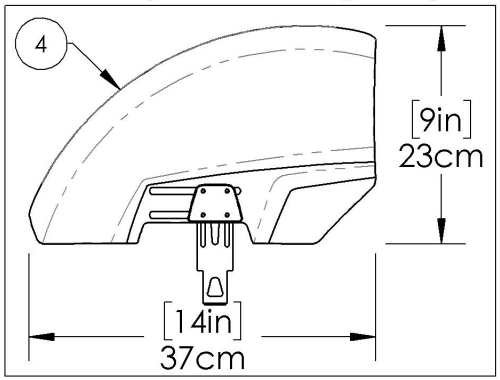

9007632
Fender Sideguard - Plastic, Right, Medium

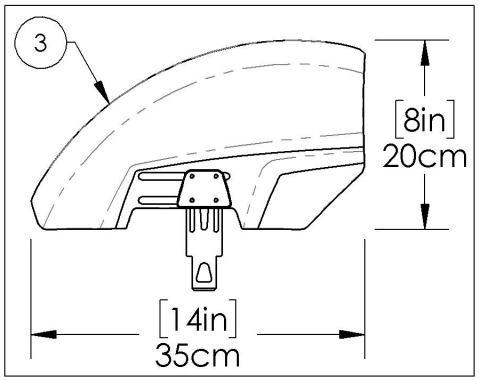

MAKE SURE TO HAVE YOUR SERIAL NUMBER NEARBY WHEN ORDERING PARTS FOR YOUR MOTION COMPOSITES WHEELCHAIR

9007634_9007637
Fender Sideguard - Plastic, Left

ITEM NO.	PARTNO	DESCRIPTION	9007634 /QTY.	9007635 /QTY.	9007636 /QTY.	9007637 /QTY.
1	51389	REMOVABLE FENDERED PLASTIC SIDEGUARDS X-SMALL, LEFT	1	-	-	-
2	51390	REMOVABLE FENDERED PLASTIC SIDEGUARDS SMALL, LEFT	-	1	-	-
3	51391	REMOVABLE FENDERED PLASTIC SIDEGUARDS MEDIUM, LEFT	-	-	1	-
4	51392	REMOVABLE FENDERED PLASTIC SIDEGUARDS LARGE, LEFT	-	-	-	1
5	51393	FENDERED SIDEGUARDS ADJUSTING PLATE	1	1	1	1
6	51395	FENDERED SIDEGUARDS INNER PLATE	1	1	1	1
7	90724	SOCKET CAP SCREW M4X0.7 X 10mm LONG, FULLY THREADED + BLUE TREADLOCKER - BLACK ZINC	4	4	4	4

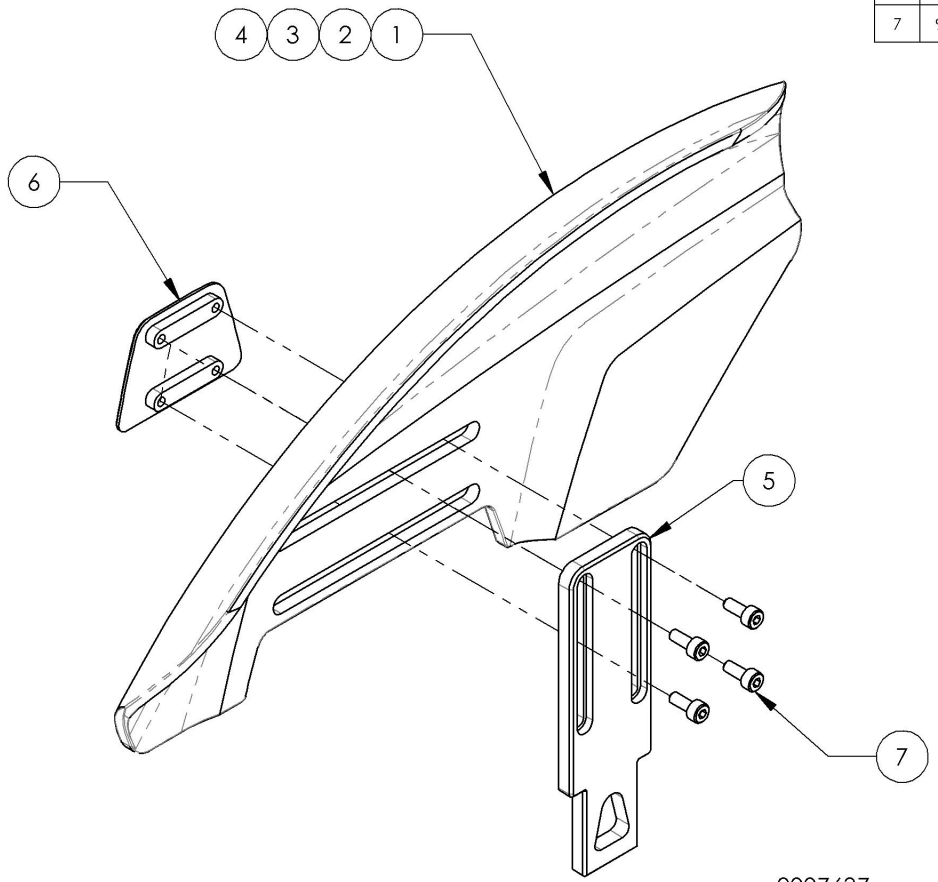

9007634
Fender Sideguard - Plastic, Left, X-Small

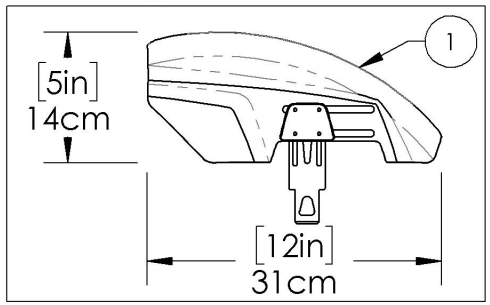

9007635
Fender Sideguard - Plastic, Left, Small

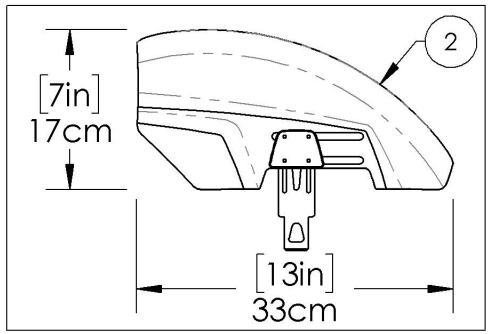

9007637
Fender Sideguard - Plastic, Left, Large

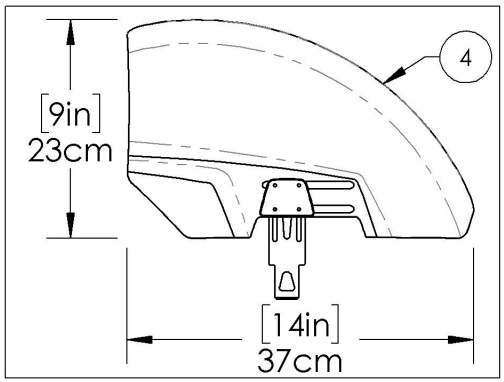

9007636
Fender Sideguard - Plastic, Left, Medium

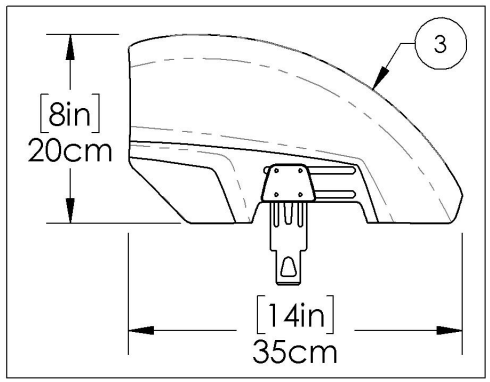

MAKE SURE TO HAVE YOUR SERIAL NUMBER NEARBY WHEN ORDERING PARTS FOR YOUR MOTION COMPOSITES WHEELCHAIR

9001322_9001324
Fender Sideguard - Carbon Fiber, Left

ITEM NO.	PART NO.	DESCRIPTION	9001322 /QTY.	9001323 /QTY.	9001324 /QTY.
1	51107	CARBON FENDER SIDEGUARD SMALL, LEFT (H-160mm L-321mm)	1	-	-
2	51109	CARBON FENDER SIDEGUARD MEDIUM, LEFT (H-192mm L-332mm)	-	1	-
3	51111	CARBON FENDER SIDEGUARD LARGE, LEFT (H-230mm L-370mm)	-	-	1
4	51118	MUDGUARD & SIDEGUARD ADJUSTING PLATE	1	1	1
5	90631	BUTTON HEAD CAP SCREW M4X0.7 X 8mm LONG, FULLY THREADED + BLUE THREADLOCKER - BLACK ZINC	4	4	4

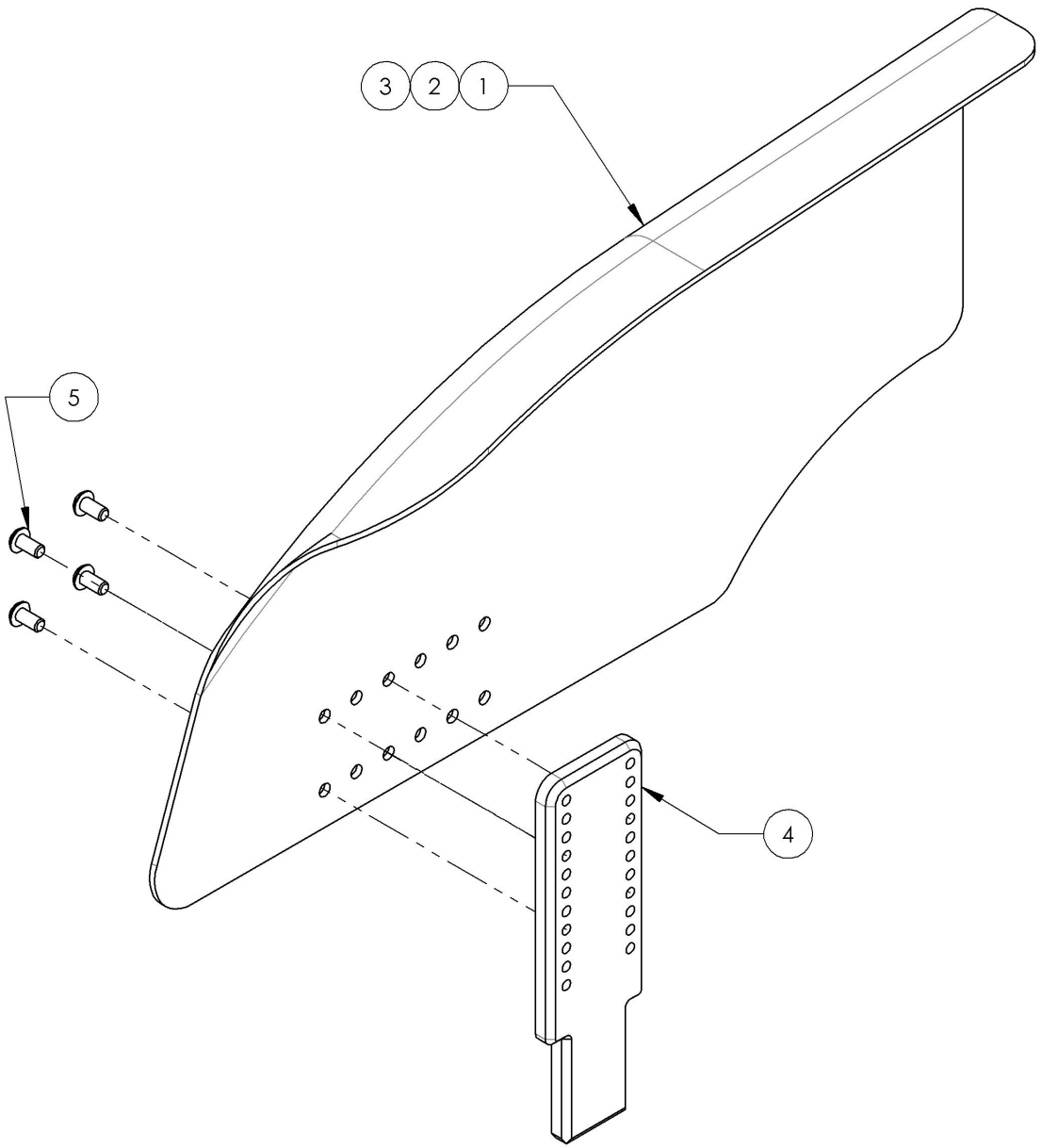

9001322
Fender Sideguard - Carbon Fiber, Left, Small

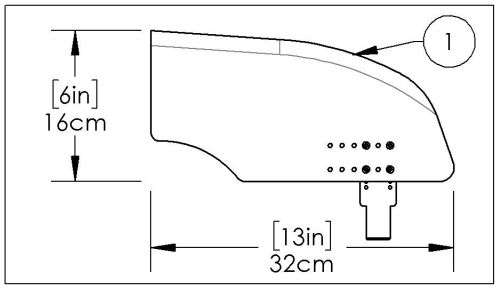

9001323
Fender Sideguard - Carbon Fiber, Left, Medium

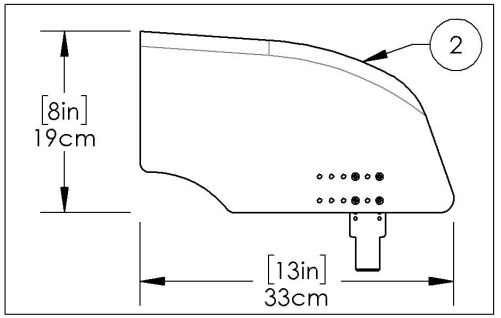

9001324
Fender Sideguard - Carbon Fiber, Left, Large

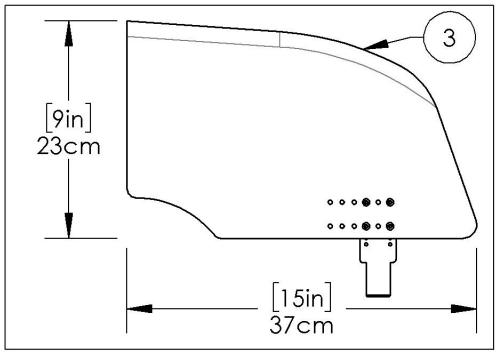

MAKE SURE TO HAVE YOUR SERIAL NUMBER NEARBY WHEN ORDERING PARTS FOR YOUR MOTION COMPOSITES WHEELCHAIR

9001319_9001321
Fender Sideguard - Carbon Fiber, Right

ITEM NO.	PART NO.	DESCRIPTION	9001319 /QTY.	9001320 /QTY.	9001321 /QTY.
1	51106	CARBON FENDER SIDEGUARD SMALL, RIGHT (H-160mm L-321mm)	1	-	-
2	51108	CARBON FENDER SIDEGUARD MEDIUM, RIGHT (H-192mm L-332mm)	-	1	-
3	51110	CARBON FENDER SIDEGUARD LARGE, RIGHT (H-230mm L-370mm)	-	-	1
4	51118	MUDGUARD & SIDEGUARD ADJUSTING PLATE	1	1	1
5	90631	BUTTON HEAD CAP SCREW M4X0.7 X 8mm LONG, FULLY THREADED + BLUE THREADLOCKER - BLACK ZINC	4	4	4

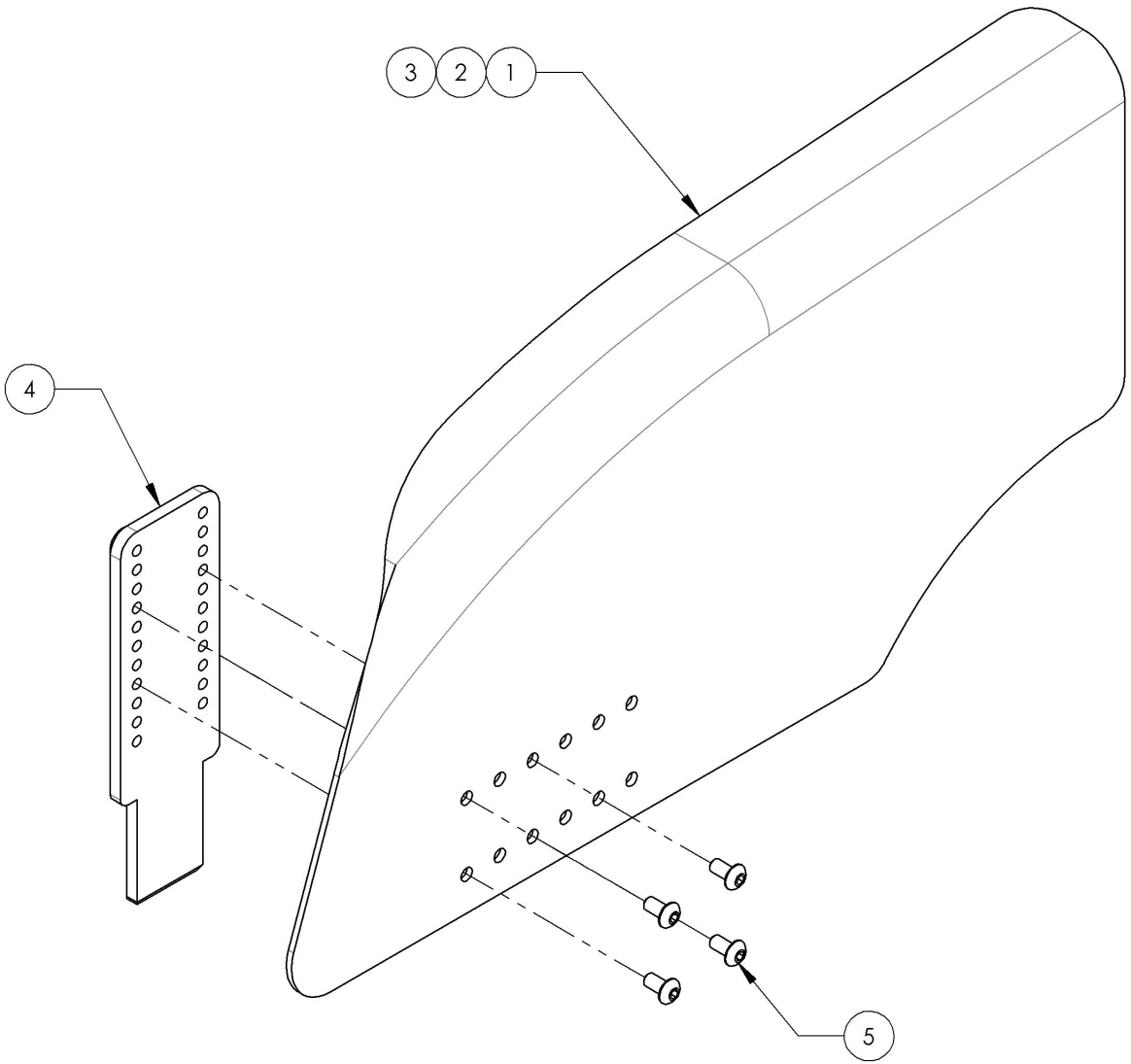

9001319
Fender Sideguard - Carbon Fiber, Right, Small

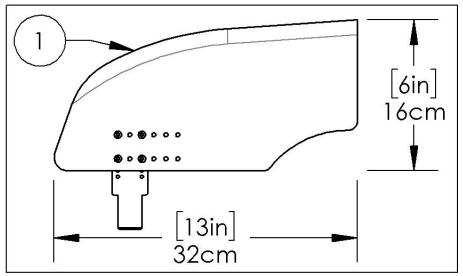

9001320
Fender Sideguard - Carbon Fiber, Right, Medium

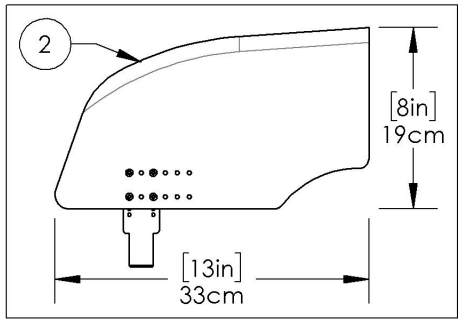

9001321
Fender Sideguard - Carbon Fiber, Right, Large

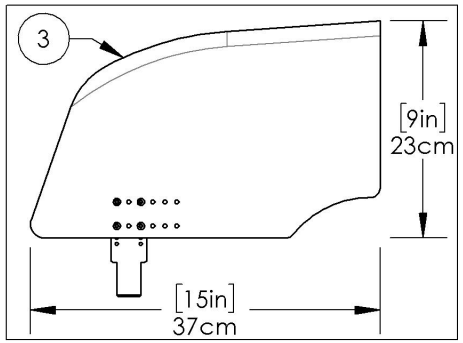

MAKE SURE TO HAVE YOUR SERIAL NUMBER NEARBY WHEN ORDERING PARTS FOR YOUR MOTION COMPOSITES WHEELCHAIR

Sideguard Catalogue
Removable Sideguard & Mudguard Receivers

ITEM NO.	PARTNO	DESCRIPTION	QTY
1	9001327	Removable Mud Guard & Side Guard - Receiver	2

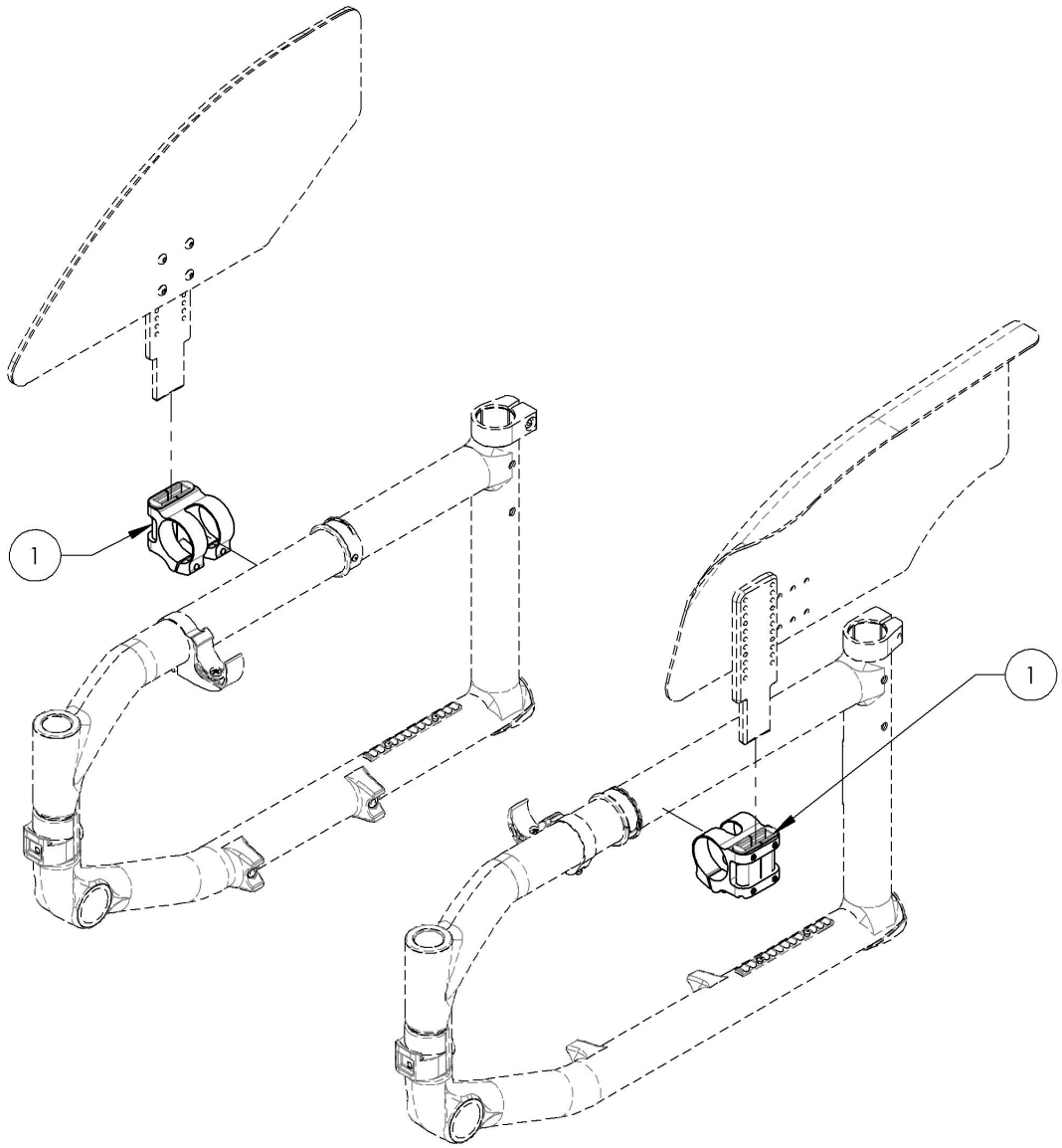

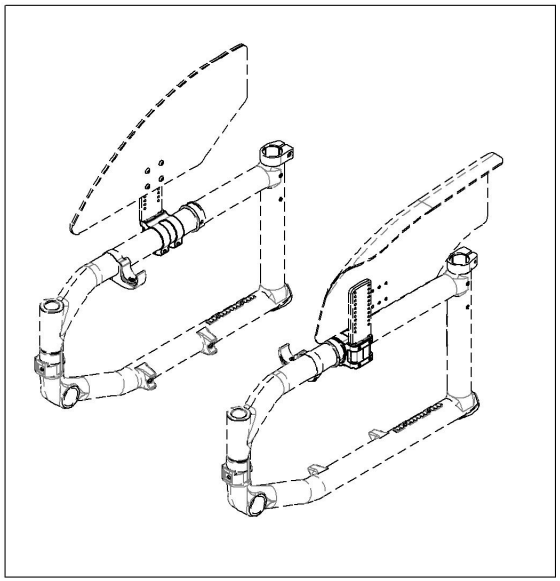

MAKE SURE TO HAVE YOUR SERIAL NUMBER NEARBY WHEN ORDERING PARTS FOR YOUR MOTION COMPOSITES WHEELCHAIR

9001327
Removable Mud Guard & Side Guard - Receiver

ITEM NO.	PARTNO	DESCRIPTION	9001327 /QTY.
1	33557	V2 SIDEGUARD RECEIVER - ASSEMBLY	1
2	90748	SOCKET CAP SCREW M5X0.8 X 18mm LONG, FULLY THREADED + BLUE TREADLOCKER - BLACK ZINC	2

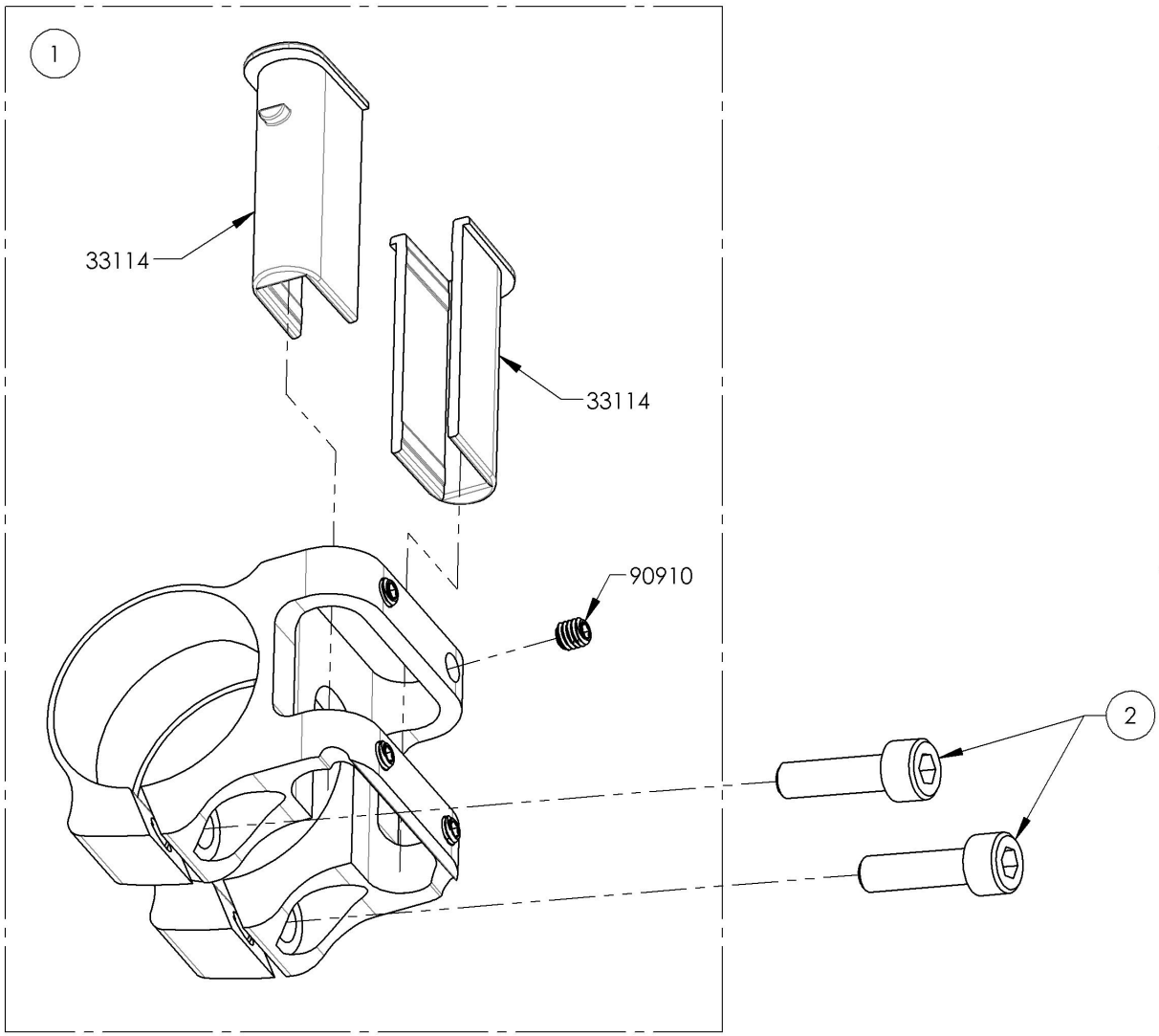

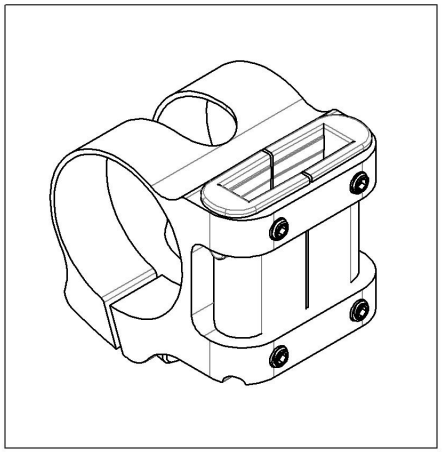

MAKE SURE TO HAVE YOUR SERIAL NUMBER NEARBY WHEN ORDERING PARTS FOR YOUR MOTION COMPOSITES WHEELCHAIR

ITEM NO.	PARTNO	DESCRIPTION	QTY
1	9002523	Side Guard - Clothes	1

MAKE SURE TO HAVE YOUR SERIAL NUMBER NEARBY WHEN ORDERING PARTS FOR YOUR MOTION COMPOSITES WHEELCHAIR

Seatbelt Catalogue
Positioning Seatbelts

ITEM NO.	PARTNO	DESCRIPTION	QTY.
1	9001587	Positioning Seatbelt - Velcro Adjustable 35 in	1
2	9002138	Positioning Seatbelt - Velcro Adjustable 60 in	1
3	9001588	Positioning Seatbelt - Auto Buckle 35 in	1
4	9002139	Positioning Seatbelt - Auto Buckle 60 in	1

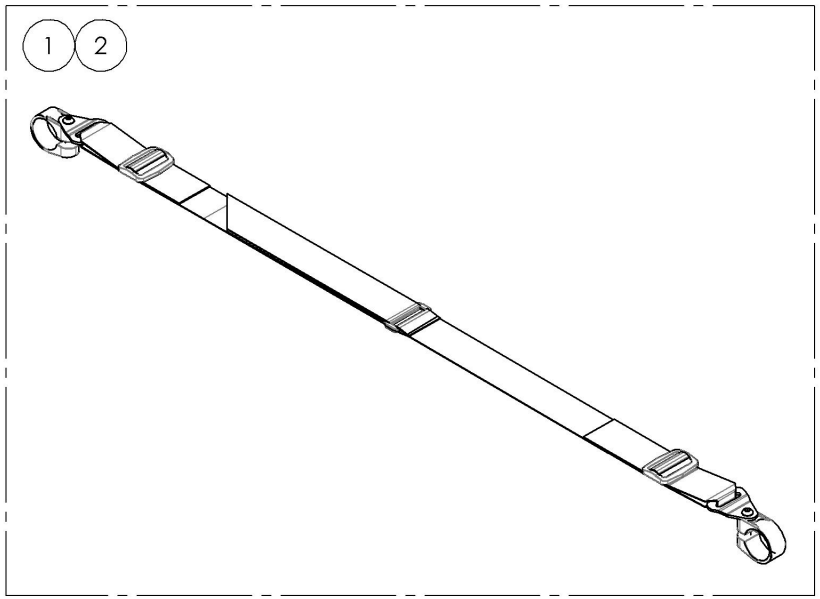

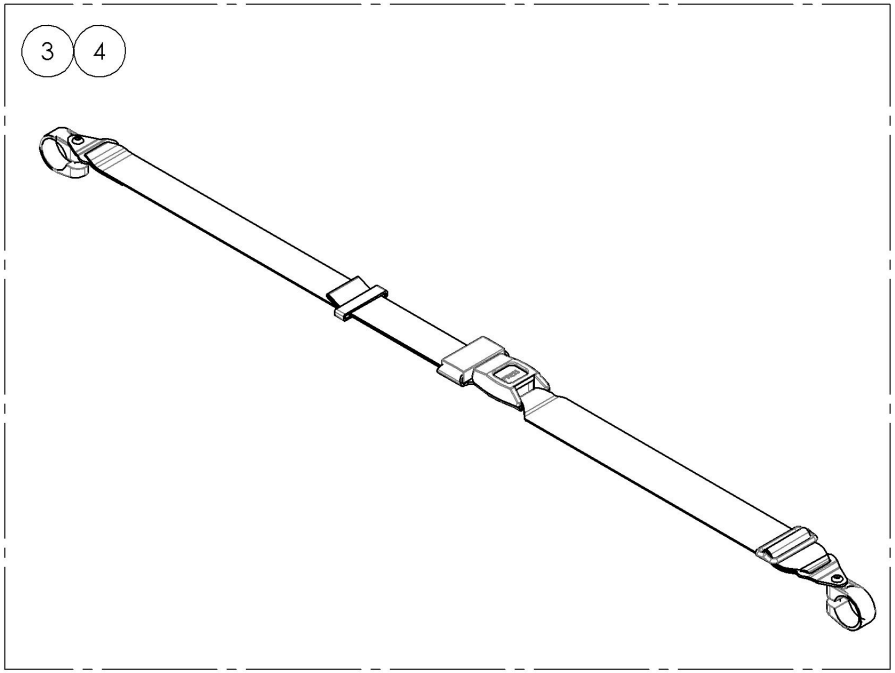

BOTH ITEMS ALREADY INCLUDE THE APPROPRIATE
NUMBER OF COMPOSITE CLAMPS

MAKE SURE TO HAVE YOUR SERIAL NUMBER
NEARBY WHEN ORDERING PARTS FOR YOUR
MOTION COMPOSITES WHEELCHAIR

9001587_9001588
Positioning Seatbelts 35 in

ITEM NO.	PARTNO	DESCRIPTION	9001587 /QTY.	9001588 /QTY.
1	51589	VELCRO SEATBELT 35in - ASSEMBLY	1	-
2	51027	POSITIONNING SEAT BELT ASSEMBLY	-	1
3	60500	FRAME SAVER ASSEMBLY (PAIR)	1	1

9001587
Positioning Seatbelt - Velcro Adjustable 35 in

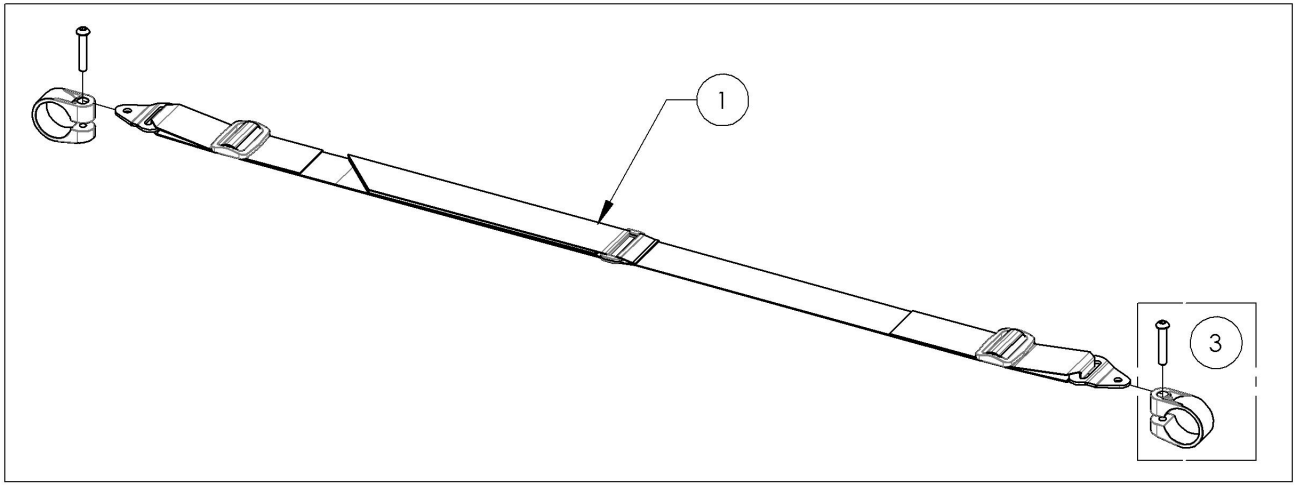

9001588
Positioning Seatbelt - Auto Buckle 35 in

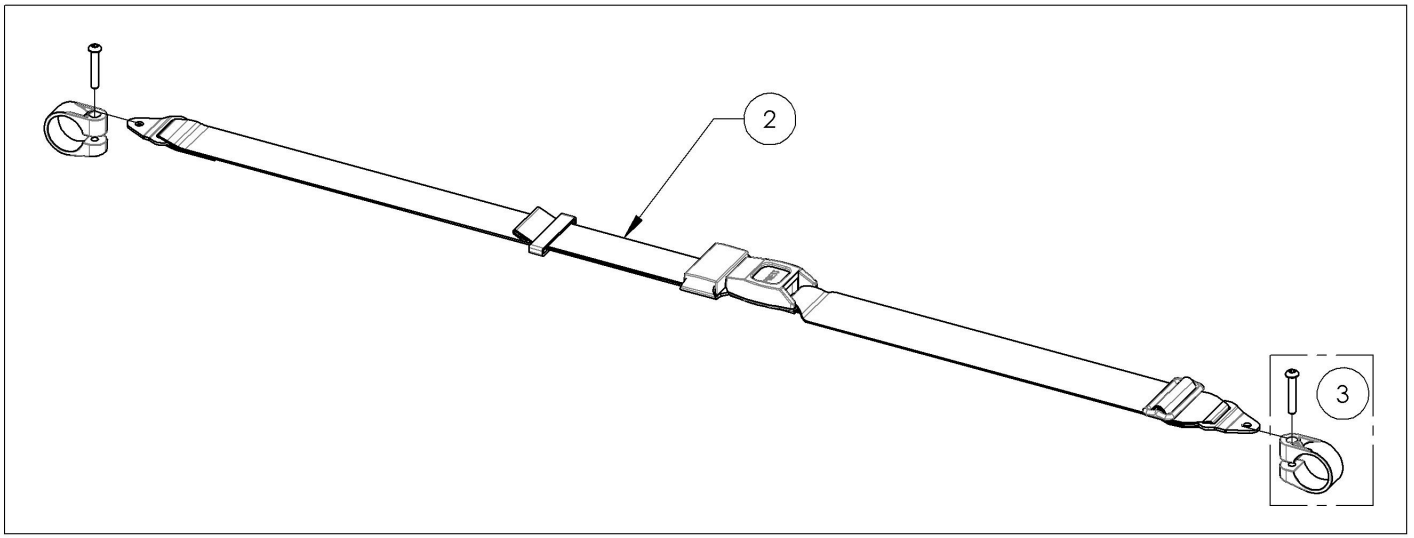

MAKE SURE TO HAVE YOUR SERIAL NUMBER NEARBY WHEN ORDERING PARTS FOR YOUR MOTION COMPOSITES WHEELCHAIR

9002138_9002139
Positioning Seatbelts 60 in

ITEM NO.	PARTNO	DESCRIPTION	9002138 /QTY.	9002139 /QTY.
1	51584	VELCRO SEATBELT 60in - ASSEMBLY	1	-
2	51583	POSITIONNING SEAT BELT 60in - ASSEMBLY	-	1
3	60500	FRAME SAVER ASSEMBLY (PAIR)	1	1

9002138
Positioning Seatbelt - Velcro Adjustable 60 in

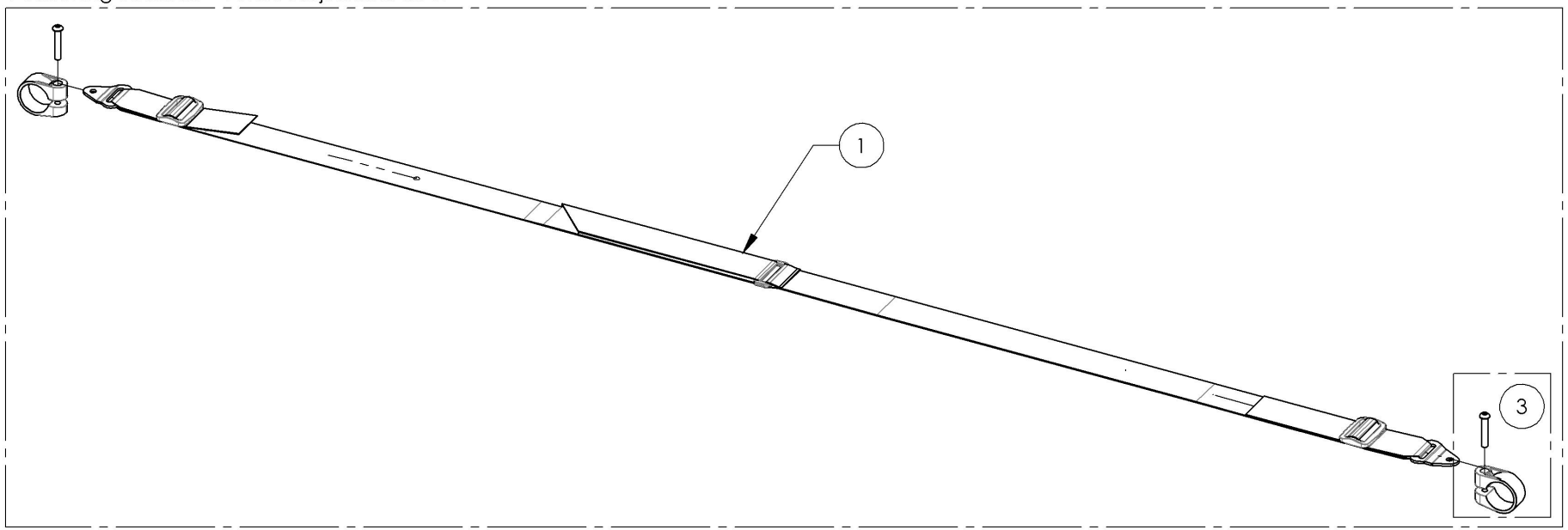

9002139
Positioning Seatbelt - Auto Buckle 60 in

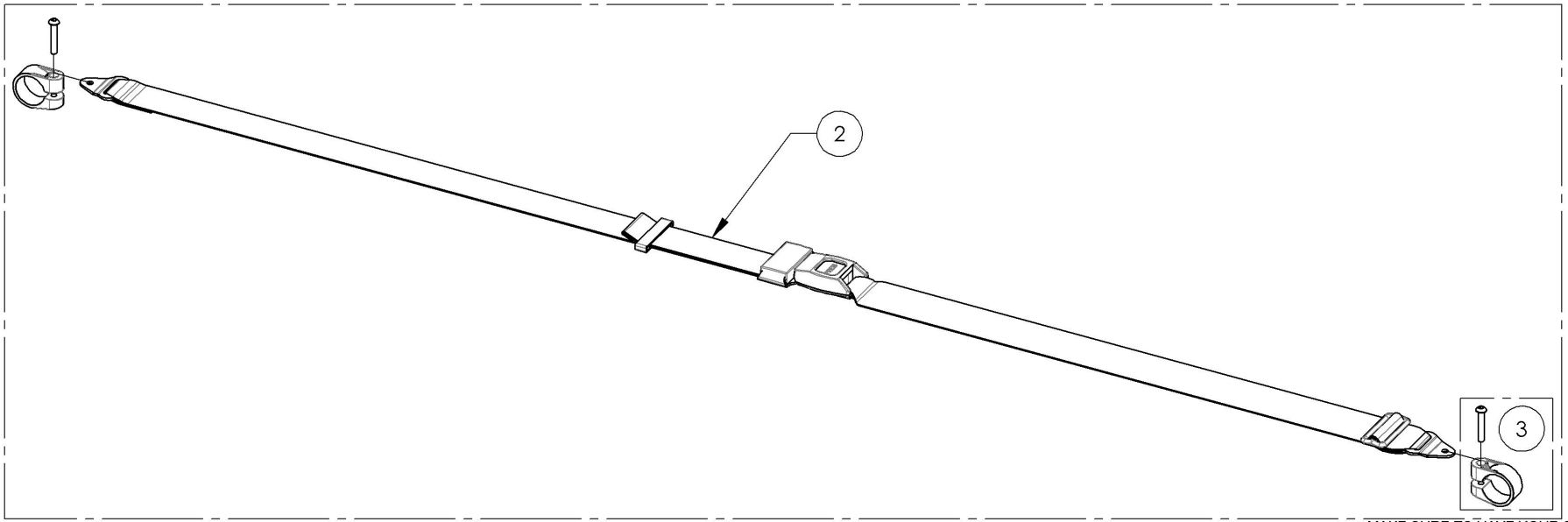

MAKE SURE TO HAVE YOUR SERIAL NUMBER NEARBY WHEN ORDERING PARTS FOR YOUR MOTION COMPOSITES WHEELCHAIR

ITEMS 1-8 ALREADY INCLUDE THE APPROPRIATE NUMBER OF COMPOSITE CLAMPS

Item#	Part#	Description	A	B	C	D
1	9002221	Positioning Seatbelt - Bodypoint 2 Point, Non-Padded, Medium	4cm (1 ½")	-	-	142cm (56")
2	9002222	Positioning Seatbelt - Bodypoint 2 Point, Non-Padded, Large	5cm (2")	-	-	155cm (61")
3	9002223	Positioning Seatbelt - Bodypoint 2 Point, Padded, Small	4cm (1 ½")	36cm (14")	5.5cm (2 ¼")	130cm (51")
4	9002224	Positioning Seatbelt - Bodypoint 2 Point, Padded, Medium	4cm (1 ½")	46cm (18")	5.5cm (2 ¼")	142cm (56")
5	9002225	Positioning Seatbelt - Bodypoint 2 Point, Padded, Large	5cm (2")	62cm (24 ½")	7cm (2 ¾")	155cm (61")
6	9002226	Positioning Seatbelt - Bodypoint 4 Point, Padded, Small	4cm (1 ½")	36cm (14")	5.5cm (2 ¼")	130cm (51")
7	9002227	Positioning Seatbelt - Bodypoint 4 Point, Padded, Medium	4cm (1 ½")	46cm (18")	5.5cm (2 ¼")	142cm (56")
8	9002228	Positioning Seatbelt - Bodypoint 4 Point, Padded, Large	5cm (2")	62cm (24 ½")	7cm (2 ¾")	155cm (61")

Non-Padded Hip Belts

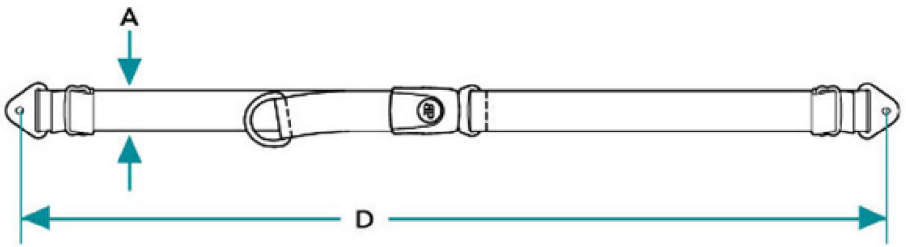

Padded Hip Belts

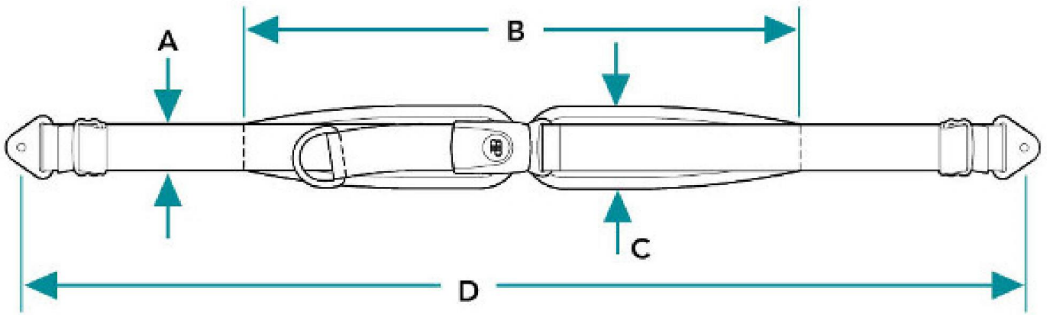

MAKE SURE TO HAVE YOUR SERIAL NUMBER NEARBY WHEN ORDERING PARTS FOR YOUR MOTION COMPOSITES WHEELCHAIR

9002221_9002228
Positioning Seatbelts - Bodypoint

ITEM NO.	PARTNO	DESCRIPTION	9002221 /QTY.	9002222 /QTY.	9002223 /QTY.	9002224 /QTY.	9002225 /QTY.	9002226 /QTY.	9002227 /QTY.	9002228 /QTY.	REPLACEMENT PART/QTY.
1	51131	POSITIONING SEATBELT - BODYPOINT 2 POINT, NON PADDED MEDIUM	1	-	-	-	-	-	-	-	-
2	51211	POSITIONING SEATBELT - BODYPOINT 2 POINT, NON PADDED LARGE	-	1	-	-	-	-	-	-	-
3	51132	POSITIONING SEATBELT - BODYPOINT 2 POINT, PADDED SMALL	-	-	1	-	-	-	-	-	-
4	51133	POSITIONING SEATBELT - BODYPOINT 2 POINT, PADDED MEDIUM	-	-	-	1	-	-	-	-	-
5	51134	POSITIONING SEATBELT - BODYPOINT 2 POINT, PADDED LARGE	-	-	-	-	1	-	-	-	-
6	51212	POSITIONING SEATBELT - BODYPOINT 4 POINT, PADDED SMALL	-	-	-	-	-	1	-	-	-
7	51135	POSITIONING SEATBELT - BODYPOINT 4 POINT, PADDED MEDIUM	-	-	-	-	-	-	1	-	-
8	51136	POSITIONING SEATBELT - BODYPOINT 4 POINT, PADDED LARGE	-	-	-	-	-	-	-	1	-
9	60500	FRAME SAVER ASSEMBLY (PAIR)	1	1	1	1	1	2	2	2	1

9002221 To 9002222
Positioning Seatbelt - Bodypoint 2 Point,
Non Padded, Medium, Large

9002223 To 9002225
Positioning Seatbelt - Bodypoint 2 Point,
Padded, Small, Medium, Large

9002226 To 9002228
Positioning Seatbelt - Bodypoint 4 Point,
Padded, Small, Medium, Large

+

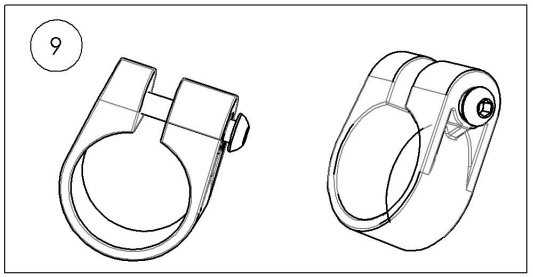

MAKE SURE TO HAVE YOUR SERIAL NUMBER NEARBY WHEN ORDERING PARTS FOR YOUR MOTION COMPOSITES WHEELCHAIR

ALL ITEMS ALREADY INCLUDE A PAIR OF CLAMPS

1 2

Evoflex with Rehab Latch

3 4

Evoflex with Swivel

Item#	Part#	Description	A	B	C	D
1	9007790	Hip Belt - Bodypoint Evoflex, Rehab Latch, Medium 46cm (18in)	2.5cm (1")	38cm (15")	5cm (2")	63cm (24 ¾")
2	9007791	Hip Belt - Bodypoint Evoflex, Rehab Latch, Large 62cm (24in)	4cm (1 ½")	46cm (18")	5.5cm (2 ¼")	76cm (29 ¾")
3	9007792	Hip Belt - Bodypoint Evoflex, Swivel, Small 38cm (15in)	4cm (1 ½")	46cm (18")	5.5cm (2 ¼")	76cm (29 ¾")
4	9007793	Hip Belt - Bodypoint Evoflex, Swivel, Medium 46cm (18in)	5cm (2")	62cm (24 ½")	7cm (2 ¾")	96cm (37 ¾")

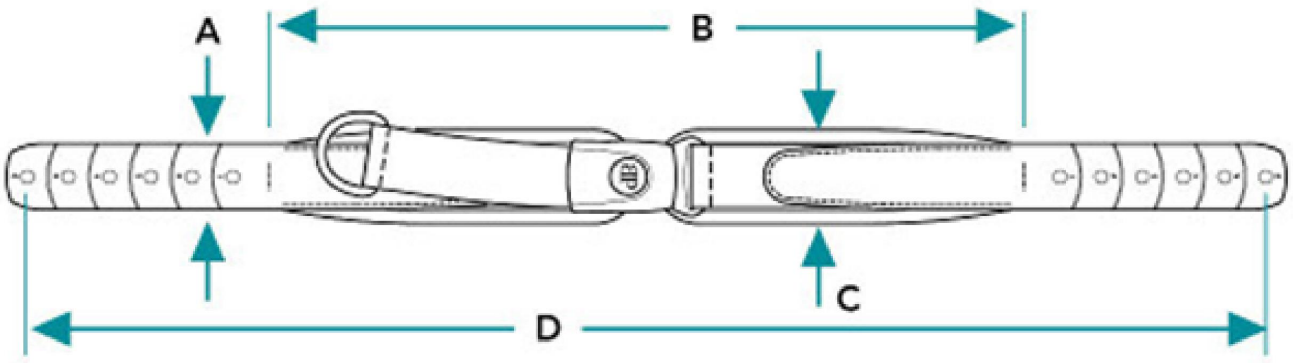

MAKE SURE TO HAVE YOUR SERIAL NUMBER NEARBY WHEN ORDERING PARTS FOR YOUR MOTION COMPOSITES WHEELCHAIR

9007790_9007793
Hip Belt - Bodypoint Evoflex

ITEM NO.	PARTNO	DESCRIPTION	9007790 /QTY.	9007791 /QTY.	9007792 /QTY.	9007793 /QTY.
1	51417	BODYPOINT HIP BELT EVOFLEX REHAB LATCH M46	1	-	-	-
2	51418	BODYPOINT HIP BELT EVOFLEX REHAB LATCH L62	-	1	-	-
3	51415	BODYPOINT HIP BELT EVOFLEX SWIVEL S38	-	-	1	-
4	51416	BODYPOINT HIP BELT EVOFLEX SWIVEL M46	-	-	-	1
5	51419	BODYPOINT BAND CLAMP 32mm (PAIR)	1	1	1	1

9007790 & 9007791
Hip Belt - Bodypoint Evoflex, Rehab Latch
Medium 46cm (18in) & Large 62cm (24in)

9007792 & 9007793
Hip Belt - Bodypoint Evoflex, Swivel
Small 38cm (15in) & Medium 46cm (18in)

MAKE SURE TO HAVE YOUR SERIAL NUMBER NEARBY WHEN ORDERING PARTS FOR YOUR MOTION COMPOSITES WHEELCHAIR

ITEM NO.	PARTNO	DESCRIPTION	QTY
1*	9003089	WC-19 - Carbon Frame, Seatbelt, Short, 20-41 in	1
2*	9003090	WC-19 - Carbon Frame, Seatbelt, Long, 20-46 in	1

!!! WC-19 INCOMPATIBLE WITH HD OPTION (265lbs MAX) !!!

THE KIT INCLUDES ALL NECESSARY COMPONENTS FOR WC-19 APPROVAL

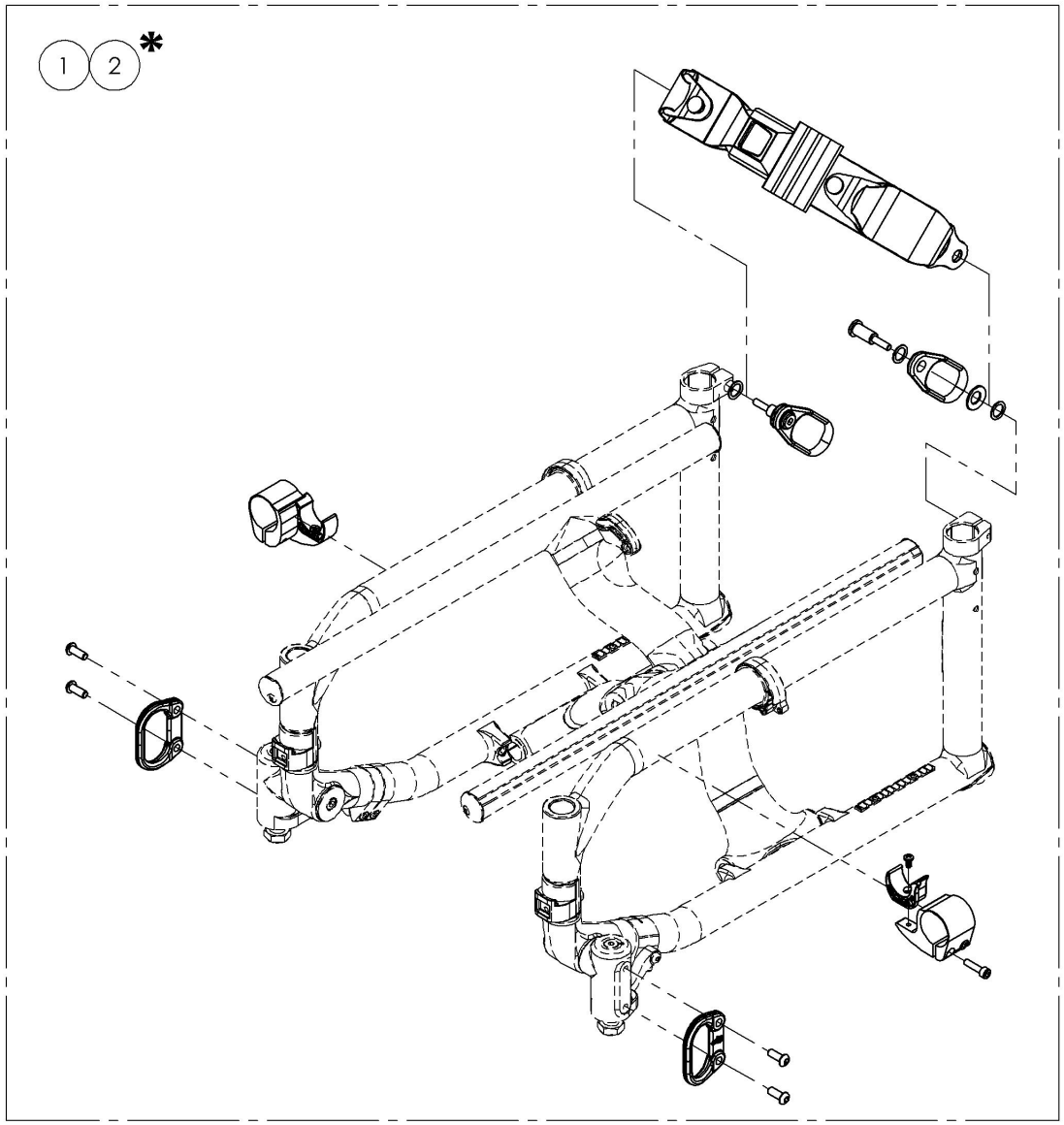

*NOTE: PLEASE CONTACT OUR CUSTOMER SERVICE BEFORE ORDERING A WC-19 KIT FOR AFTER MARKET USE. COMPONENTS MUST BE INSTALLED BY MOTION COMPOSITES TO BE WC-19 CERTIFIED.

MAKE SURE TO HAVE YOUR SERIAL NUMBER NEARBY WHEN ORDERING PARTS FOR YOUR MOTION COMPOSITES WHEELCHAIR

9003089_9003090
WC-19 - Carbon Frame, Seatbelt

ITEM NO.	PARTNO	DESCRIPTION	9003089 /QTY.	9003090 /QTY.	REPLACEMENT PARTS/QTY.
1*	60413	WC-19 KIT - CARBON FRAME, SHORT	1	-	-
2*	60414	WC-19 KIT - CARBON FRAME, LONG	-	1	-
3	51536	WC-19 SEATBELT SHORT - ASSEMBLY	-	-	1
4	51500	WC-19 SEATBELT LONG - ASSEMBLY	-	-	1

*NOTE: PLEASE CONTACT OUR CUSTOMER SERVICE BEFORE ORDERING A WC-19 KIT FOR AFTER MARKET USE. COMPONENTS MUST BE INSTALLED BY MOTION COMPOSITES TO BE WC-19 CERTIFIED.
(#60413 & #60414)

!!! WC-19 INCOMPATIBLE WITH HD OPTION (265lbs MAX) !!!

9003089
WC-19 - Carbon Frame, Seatbelt, Short, 20-41 in

9003090
WC-19 - Carbon Frame, Seatbelt, Long, 20-46 in

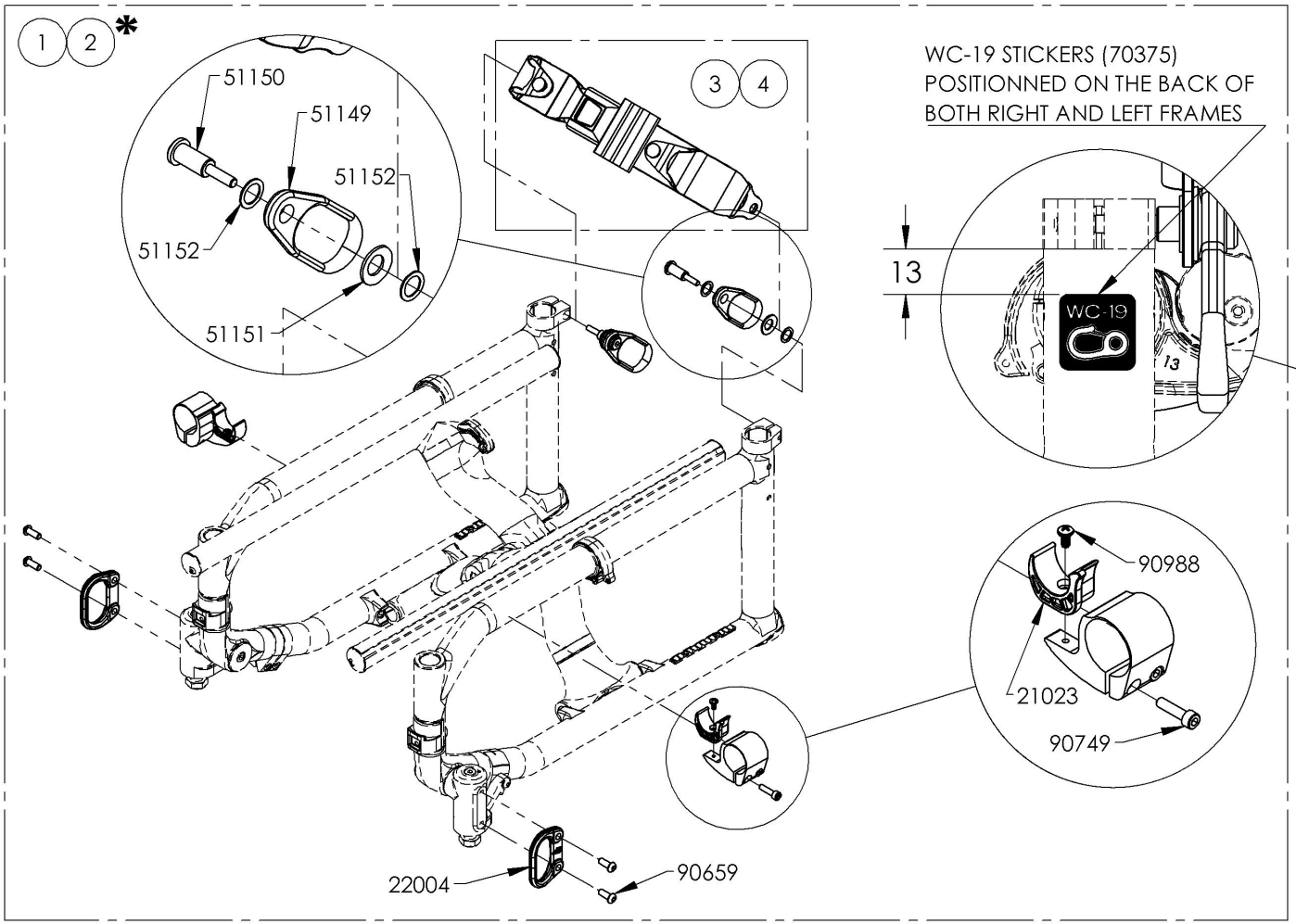

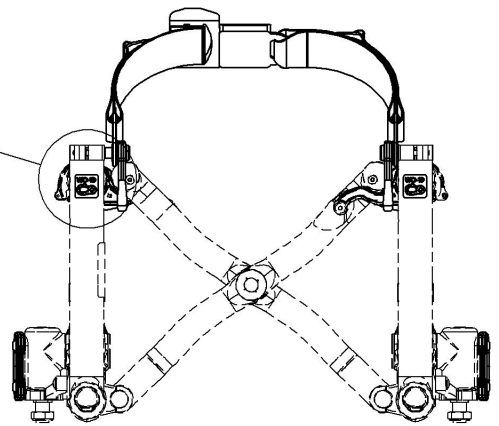

MAKE SURE TO HAVE YOUR SERIAL NUMBER NEARBY WHEN ORDERING PARTS FOR YOUR MOTION COMPOSITES WHEELCHAIR

Seatbelt Catalogue
Positioning Seatbelts - Additional Hardware (2 Composite Clamps)

ITEM NO.	PARTNO	DESCRIPTION	QTY.
1	9002220	Positioning Seatbelt - Additional Hardware (2 Composite Clamps)	1

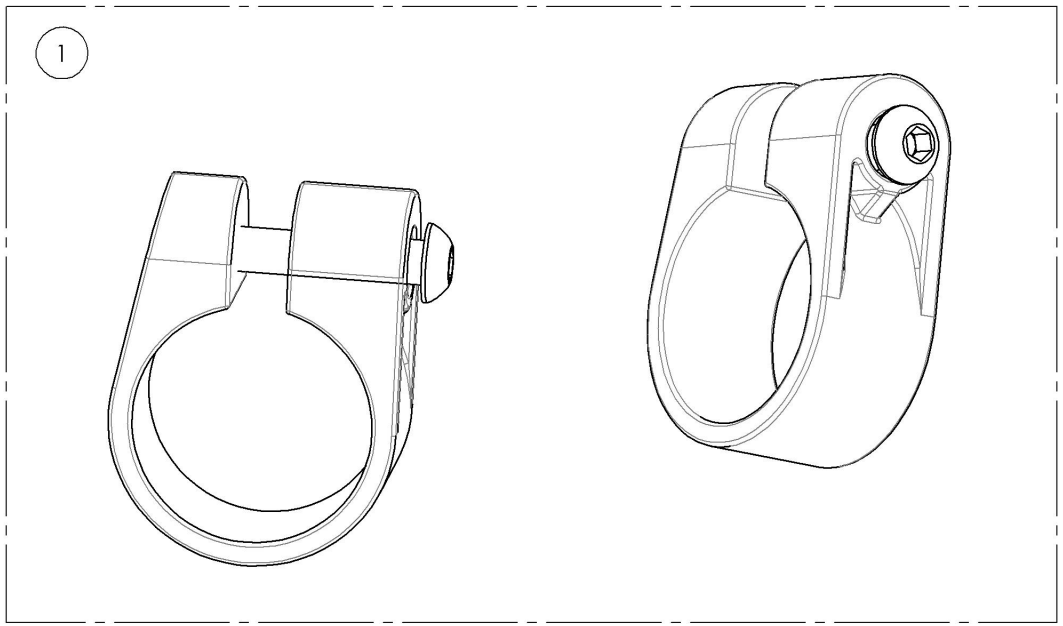

MAKE SURE TO HAVE YOUR SERIAL NUMBER NEARBY WHEN ORDERING PARTS FOR YOUR MOTION COMPOSITES WHEELCHAIR

9002220
Positioning Seatbelts - Additional Hardware (2 Composite Clamps)

ITEM NO.	PARTNO	DESCRIPTION	9002220 /QTY.
1	60500	FRAME SAVER ASSEMBLY (PAIR)	1

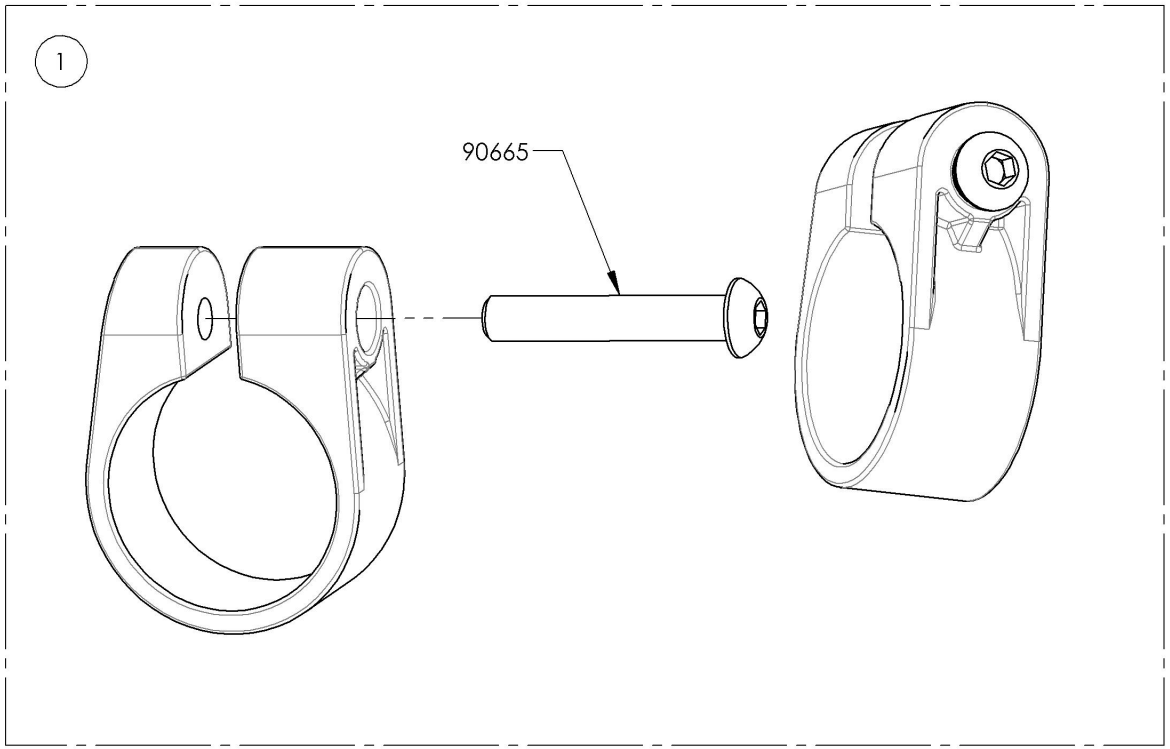

MAKE SURE TO HAVE YOUR SERIAL NUMBER NEARBY WHEN ORDERING PARTS FOR YOUR MOTION COMPOSITES WHEELCHAIR

Accessories Catalogue
Anti-tippers

ITEM NO.	PARTNO	DESCRIPTION	QTY.
1	9001620	Anti-Tipper X- Small + Short Extension	1
2	9001621	Anti-Tipper X- Small + Long Extension	1
3	9001614	Anti-Tipper Small + Short Extension	1
4	9001615	Anti-Tipper Small + Long Extension	1
5	9001616	Anti-Tipper Medium + Short Extension	1
6	9001617	Anti-Tipper Medium + Long Extension	1
7	9001618	Anti-Tipper Large + Short Extension	1
8	9001619	Anti-Tipper Large + Long Extension	1

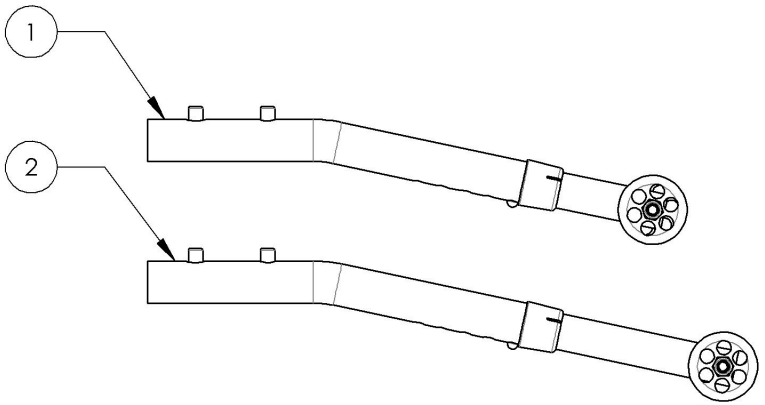

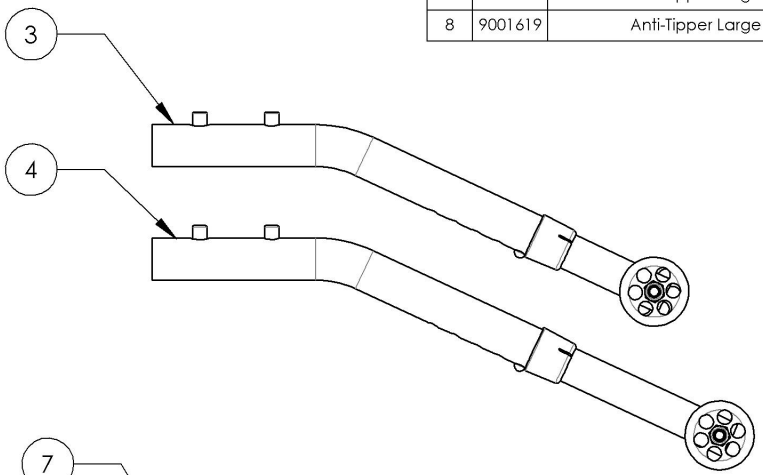

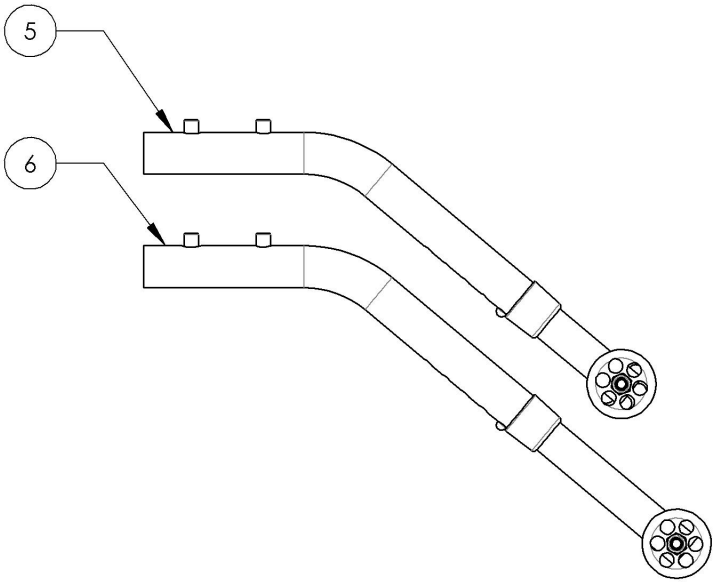

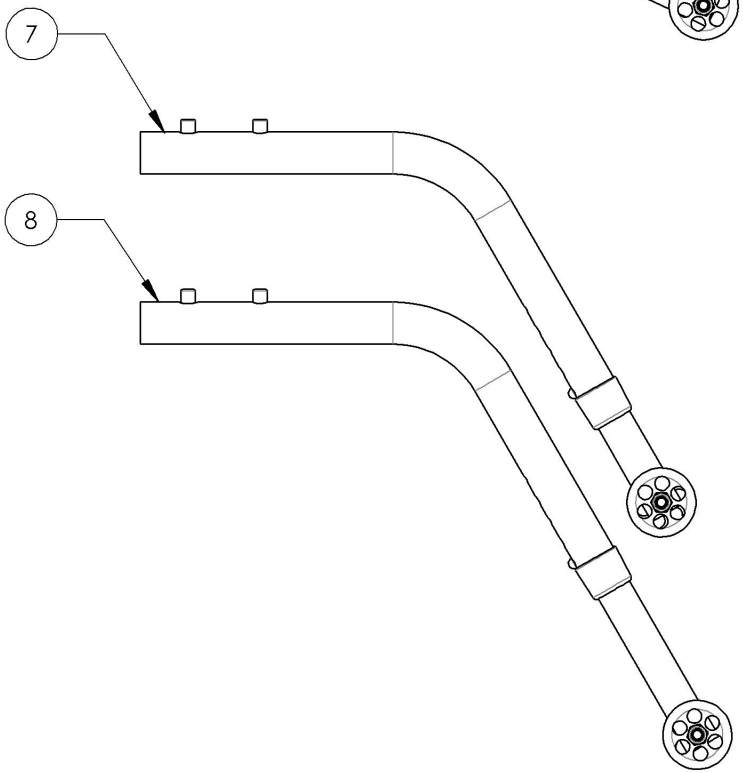

MAKE SURE TO HAVE YOUR SERIAL NUMBER NEARBY WHEN ORDERING PARTS FOR YOUR MOTION COMPOSITES WHEELCHAIR

9001620_9001621
Anti-Tipper X- Small + Extension

ITEM NO.	PARTNO	DESCRIPTION	9001620 /QTY.	9001621 /QTY.
1	51513	ANTI-TIPPER X-SMALL V2 - ASSEMBLY	1	1
2	51517	ANTI-TIPPER EXTENSION SHORT V2 - ASSEMBLY	1	-
3	51518	ANTI-TIPPER EXTENSION LONG V2 - ASSEMBLY	-	1

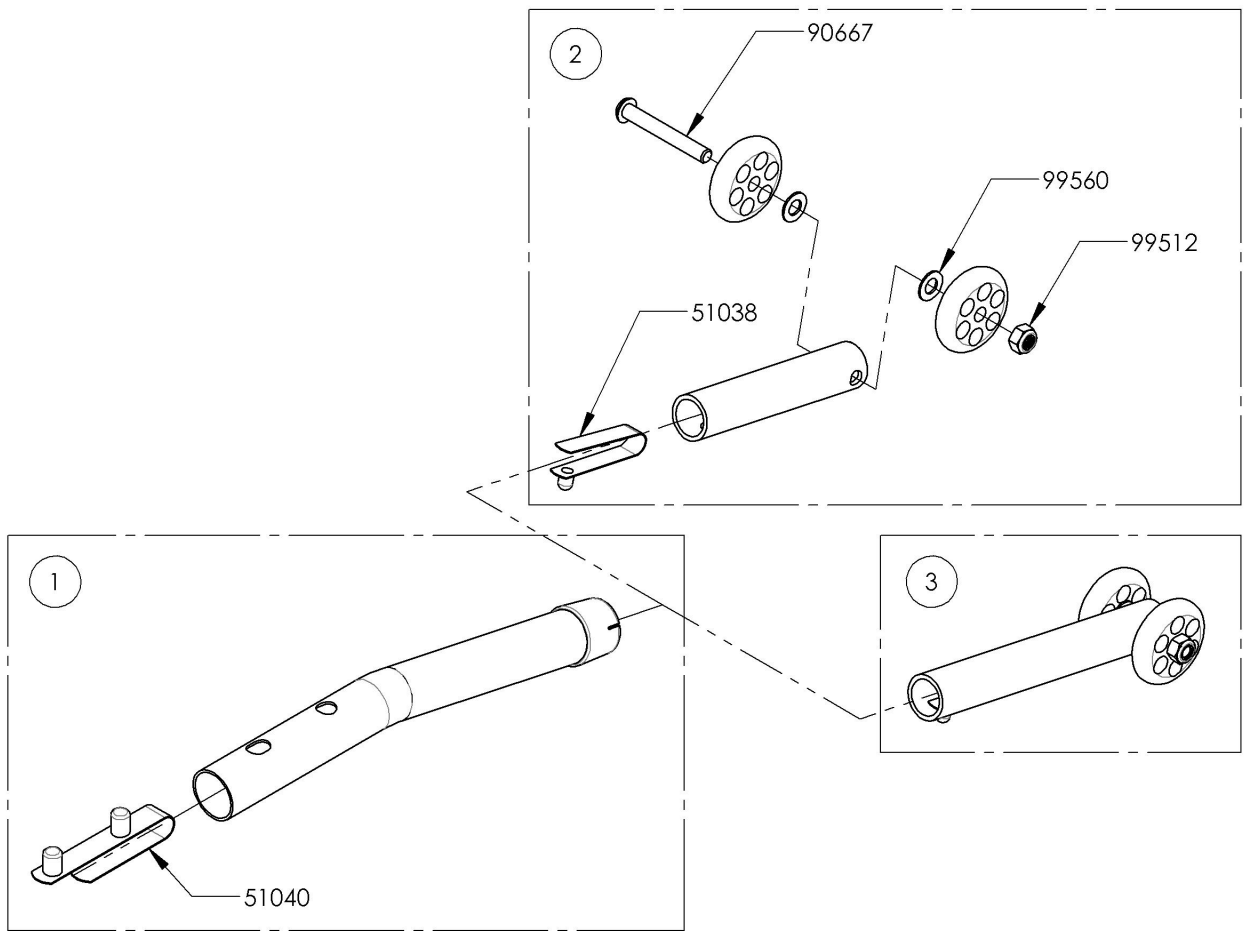

9001620
Anti-Tipper X- Small + Short Extension

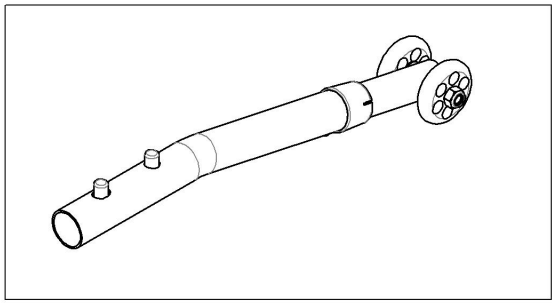

9001621
Anti-Tipper X- Small + Long Extension

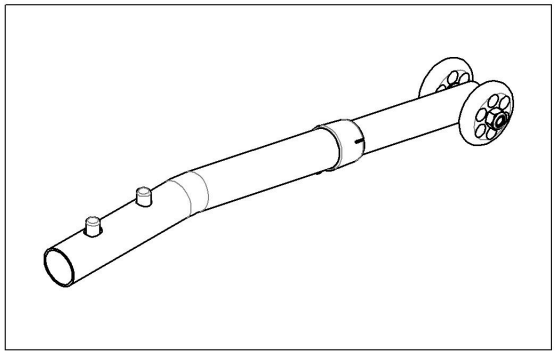

MAKE SURE TO HAVE YOUR SERIAL NUMBER NEARBY WHEN ORDERING PARTS FOR YOUR MOTION COMPOSITES WHEELCHAIR

9001614_9001615
Anti-Tipper Small + Extension

ITEM NO.	PARTNO	DESCRIPTION	9001614 /QTY.	9001615 /QTY.
1	51519	ANTI-TIPPER SMALL V2 - ASSEMBLY	1	1
2	51517	ANTI-TIPPER EXTENSION SHORT V2 - ASSEMBLY	1	-
3	51518	ANTI-TIPPER EXTENSION LONG V2 - ASSEMBLY	-	1

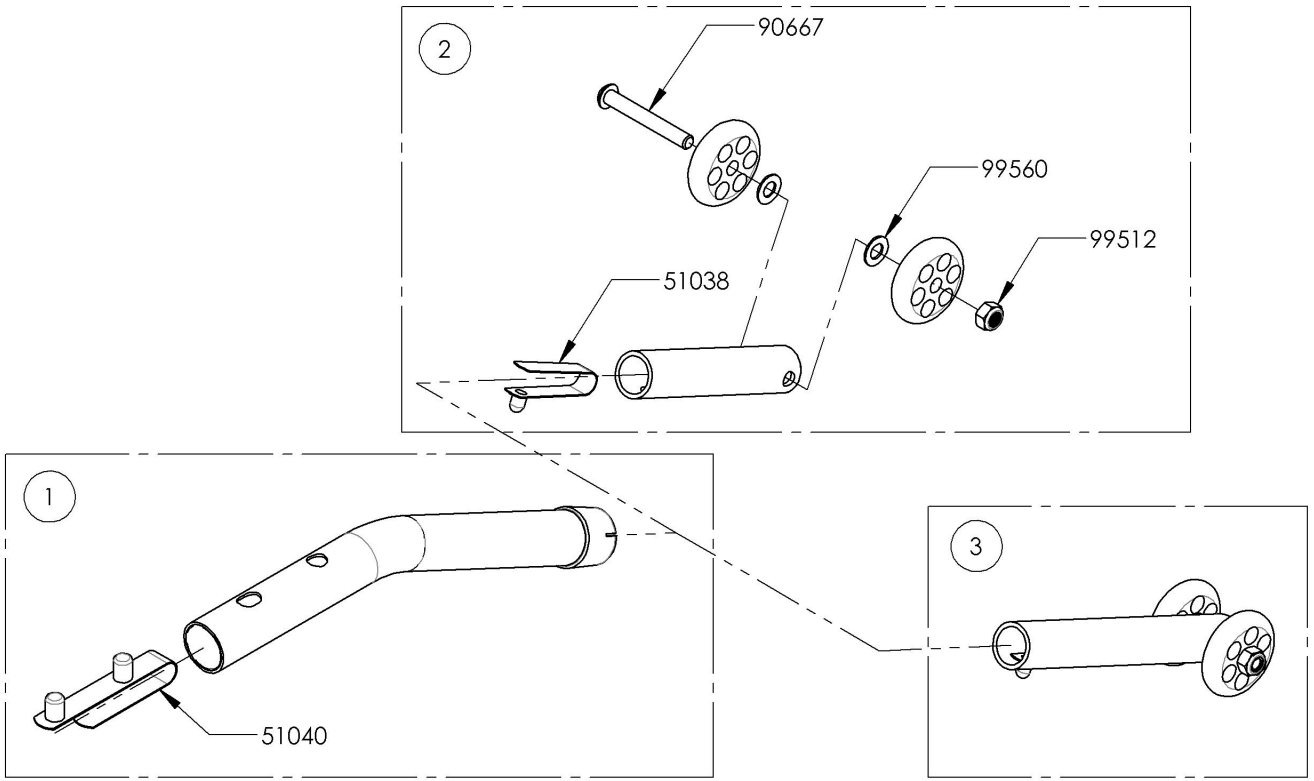

9001614
Anti-Tipper Small + Short Extension

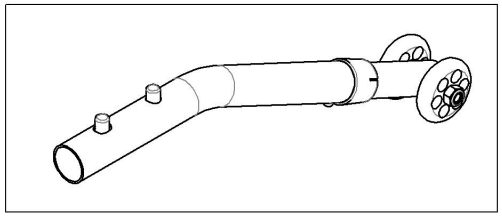

9001615
Anti-Tipper Small + Long Extension

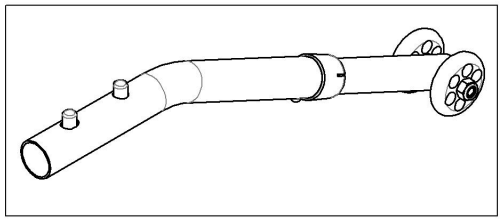

MAKE SURE TO HAVE YOUR SERIAL NUMBER NEARBY WHEN ORDERING PARTS FOR YOUR MOTION COMPOSITES WHEELCHAIR

9001616_9001617
Anti-Tipper Medium + Extension

ITEM NO.	PARTNO	DESCRIPTION	9001616 /QTY.	9001617 /QTY.
1	51520	ANTI-TIPPER MEDIUM V2 - ASSEMBLY	1	1
2	51517	ANTI-TIPPER EXTENSION SHORT V2 - ASSEMBLY	1	-
3	51518	ANTI-TIPPER EXTENSION LONG V2 - ASSEMBLY	-	1

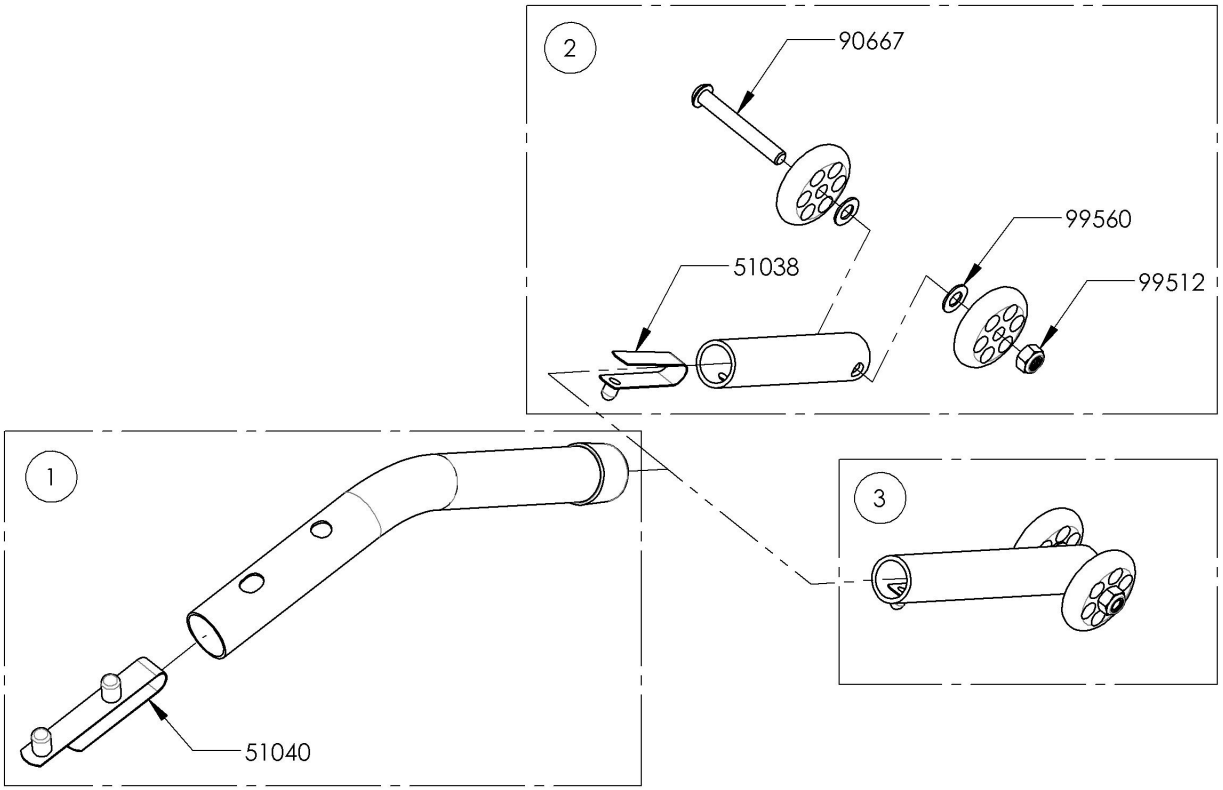

9001616
Anti-Tipper Medium + Short Extension

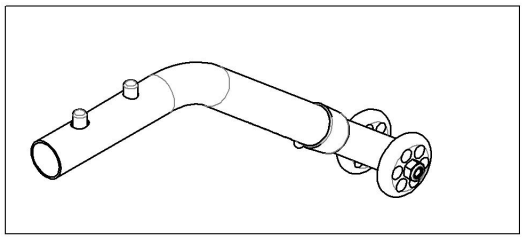

9001617
Anti-Tipper Medium + Long Extension

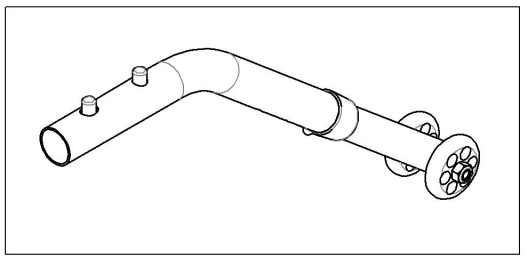

MAKE SURE TO HAVE YOUR SERIAL NUMBER NEARBY WHEN ORDERING PARTS FOR YOUR MOTION COMPOSITES WHEELCHAIR

9001618_9001619
Anti-Tipper Large + Extension

ITEM NO.	PARTNO	DESCRIPTION	9001618 /QTY.	9001619 /QTY.
1	51521	ANTI-TIPPER LARGE V2 - ASSEMBLY	1	1
2	51517	ANTI-TIPPER EXTENSION SHORT V2 - ASSEMBLY	1	-
3	51518	ANTI-TIPPER EXTENSION LONG V2 - ASSEMBLY	-	1

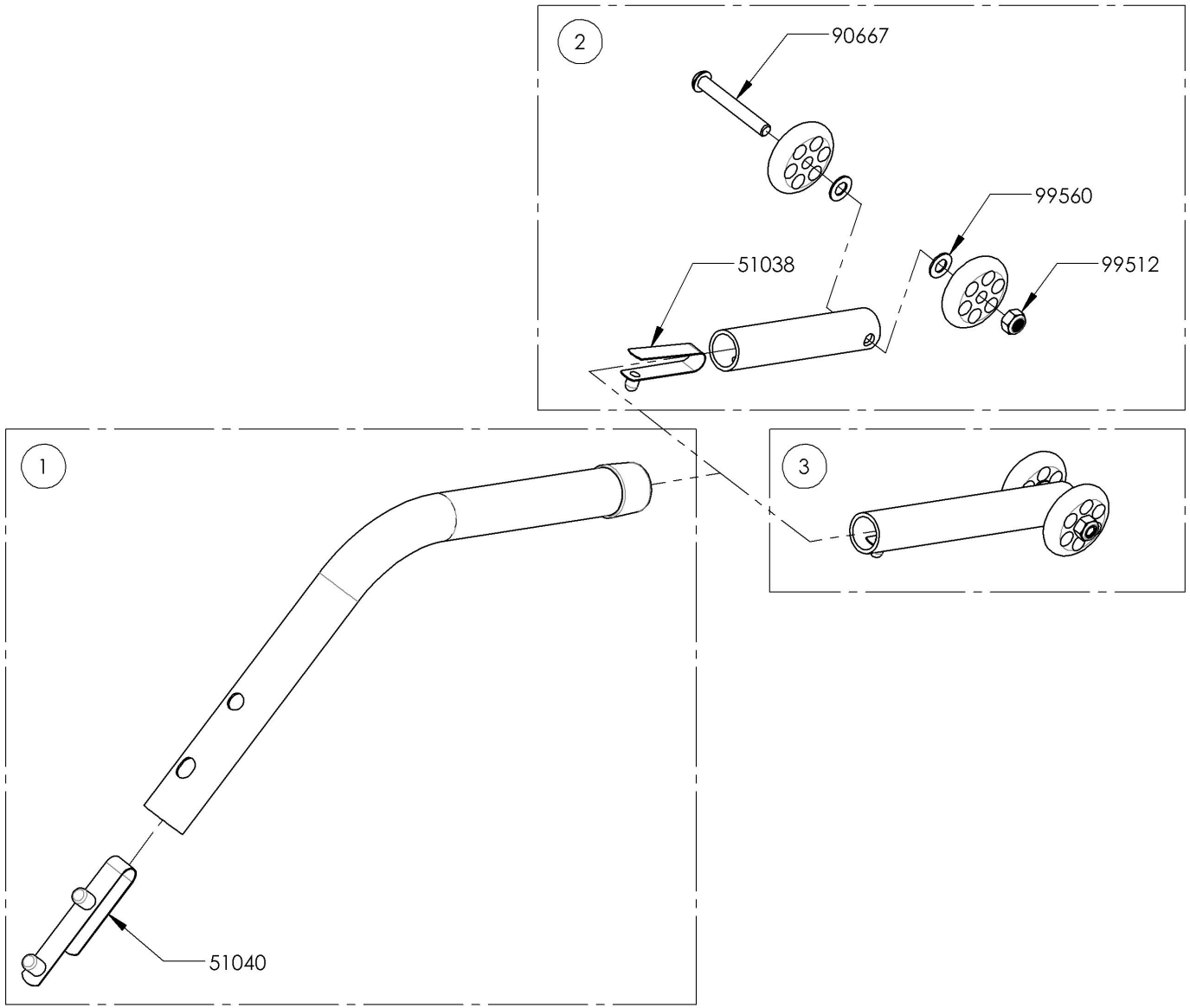

9001618
Anti-Tipper Large + Short Extension

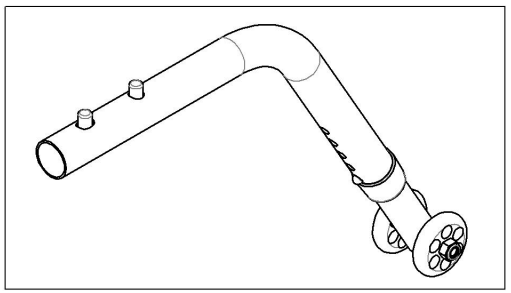

9001619
Anti-Tipper Large + Long Extension

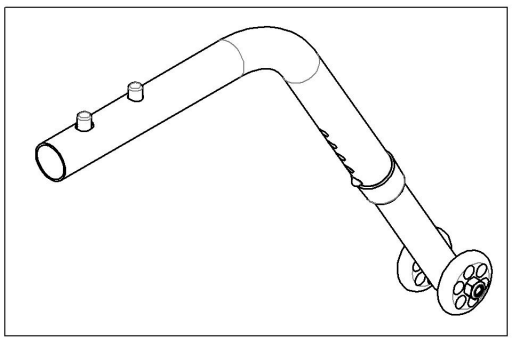

MAKE SURE TO HAVE YOUR SERIAL NUMBER NEARBY WHEN ORDERING PARTS FOR YOUR MOTION COMPOSITES WHEELCHAIR

Accessories Catalogue
Patches

ITEM NO.	PARTNO	DESCRIPTION	QTY.
1	9002230	Patch - Army	1
2	9002231	Patch - Navy	1
3	9002232	Patch - Air Force	1
4	9002233	Patch - Marines	1
5	9002234	Patch - The Badge of Military Merit Purple Heart	1
6	9002522	Patch - Cost Guard	1

MAKE SURE TO HAVE YOUR SERIAL NUMBER NEARBY WHEN ORDERING PARTS FOR YOUR MOTION COMPOSITES WHEELCHAIR

Accessories Catalogue
Cane Holders

ITEM NO.	PARTNO	DESCRIPTION	QTY.
1	9001627	Cane Holder - Right	1
2	9001628	Cane Holder - Left	1

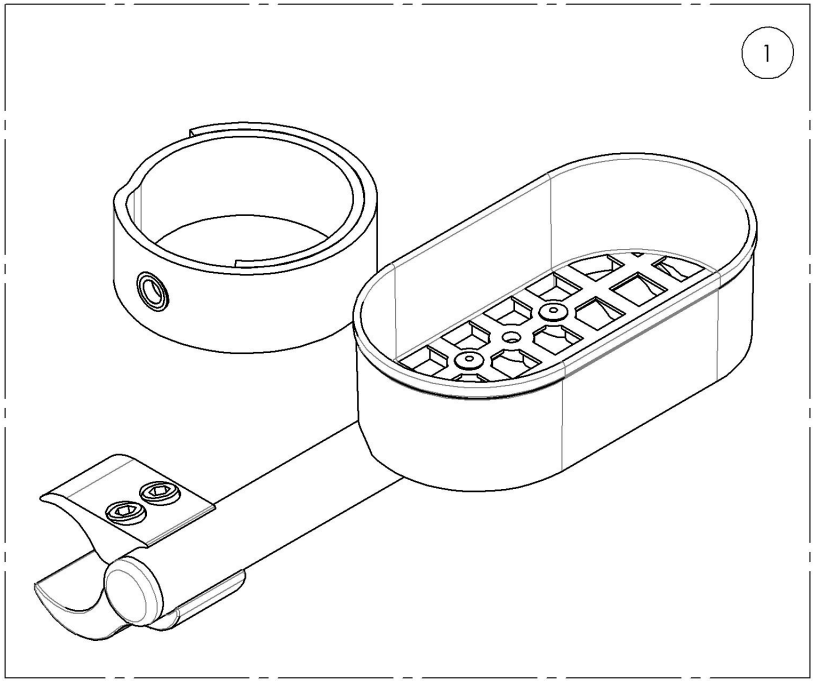

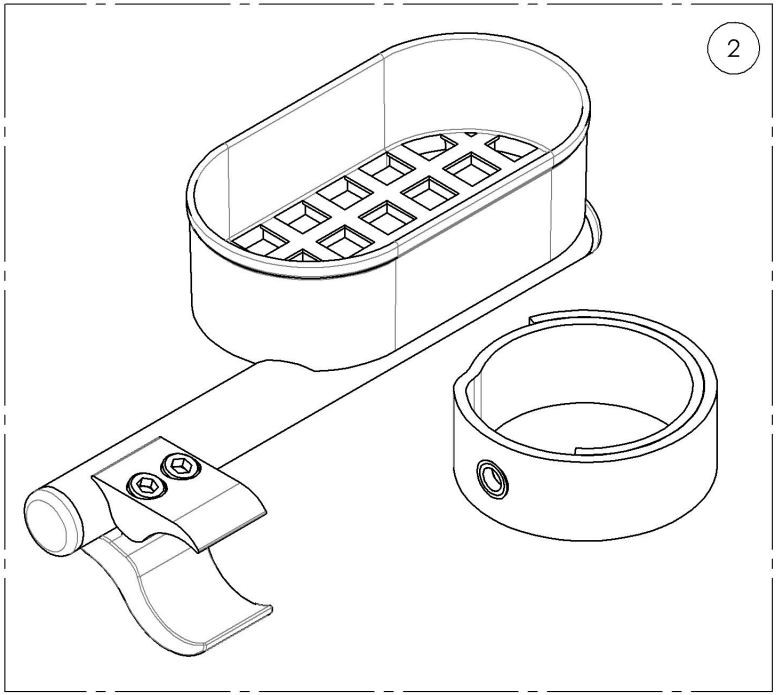

MAKE SURE TO HAVE YOUR SERIAL NUMBER NEARBY WHEN ORDERING PARTS FOR YOUR MOTION COMPOSITES WHEELCHAIR

9001627_9001628
Cane Holders

ITEM NO.	PARTNO	DESCRIPTION	9001628 /QTY.	9001627 /QTY.
1	51505	CANE HOLDER RIGHT - ASSEMBLY	-	1
2	51506	CANE HOLDER LEFT - ASSEMBLY	1	-
3	41501	BRAKE CLAMP	1	1
4	51023	CANE HOLDER STRAP	1	1

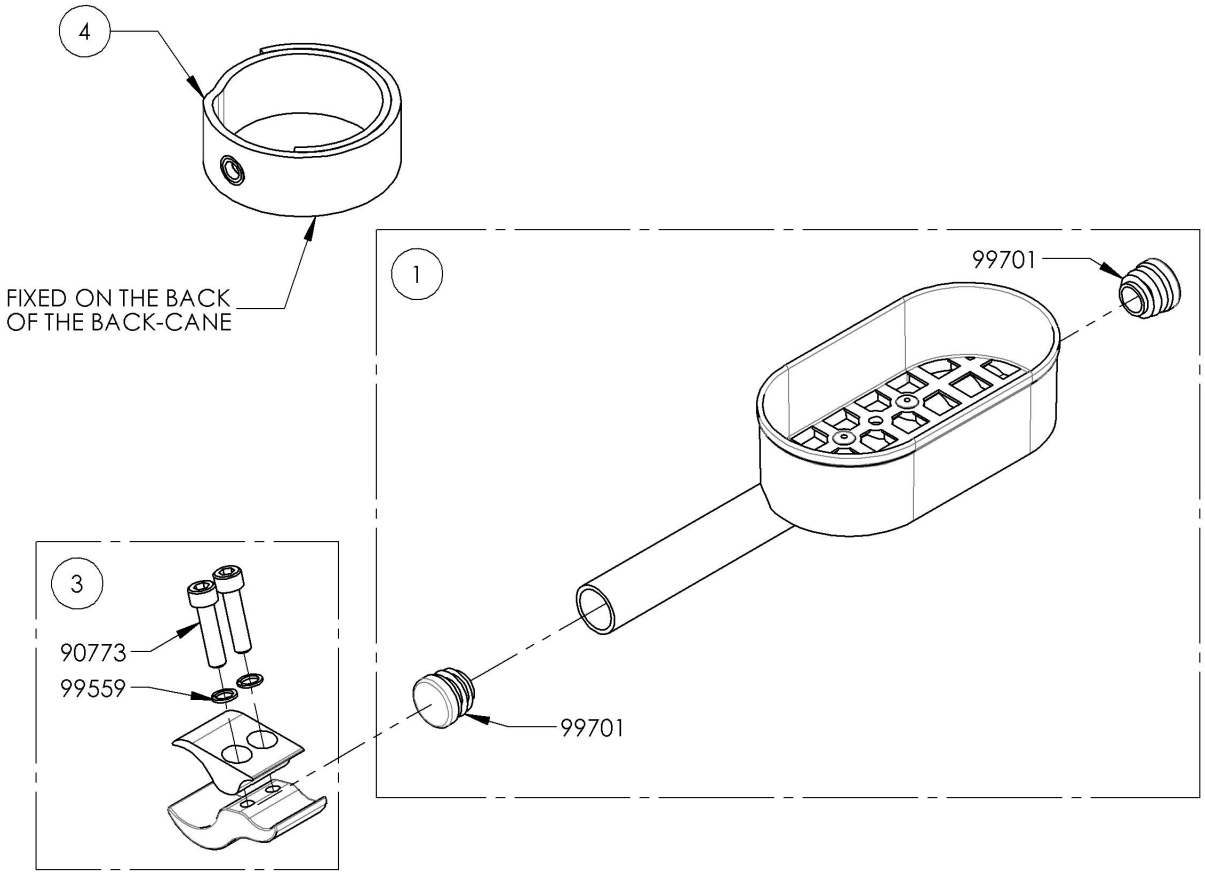

9001627 - Cane Holder - Right

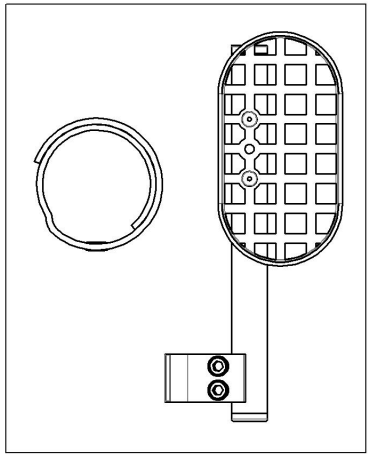

9001628 - Cane Holder - Left

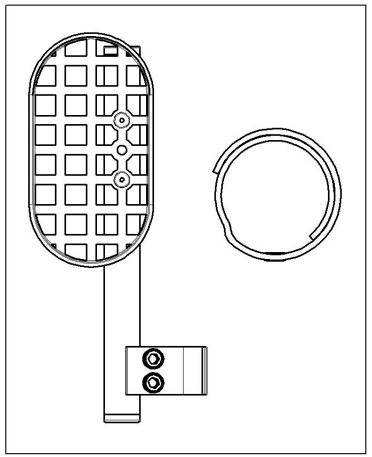

MAKE SURE TO HAVE YOUR SERIAL NUMBER NEARBY WHEN ORDERING PARTS FOR YOUR MOTION COMPOSITES WHEELCHAIR

Accessories Catalogue
Closing Straps

ITEM NO.	PARTNO	DESCRIPTION	QTY.
1	9007615	Closing Strap Sewed with Seat Sling (Specify Seat Width & Depth)	1

CONTACT OUR CUSTOMER SERVICE BEFORE ORDERING
A NEW SEAT SLING WITH SEWED CLOSING TRAPS
(PLEASE PROVIDE WHEELCHAIR SERIAL NUMBER)

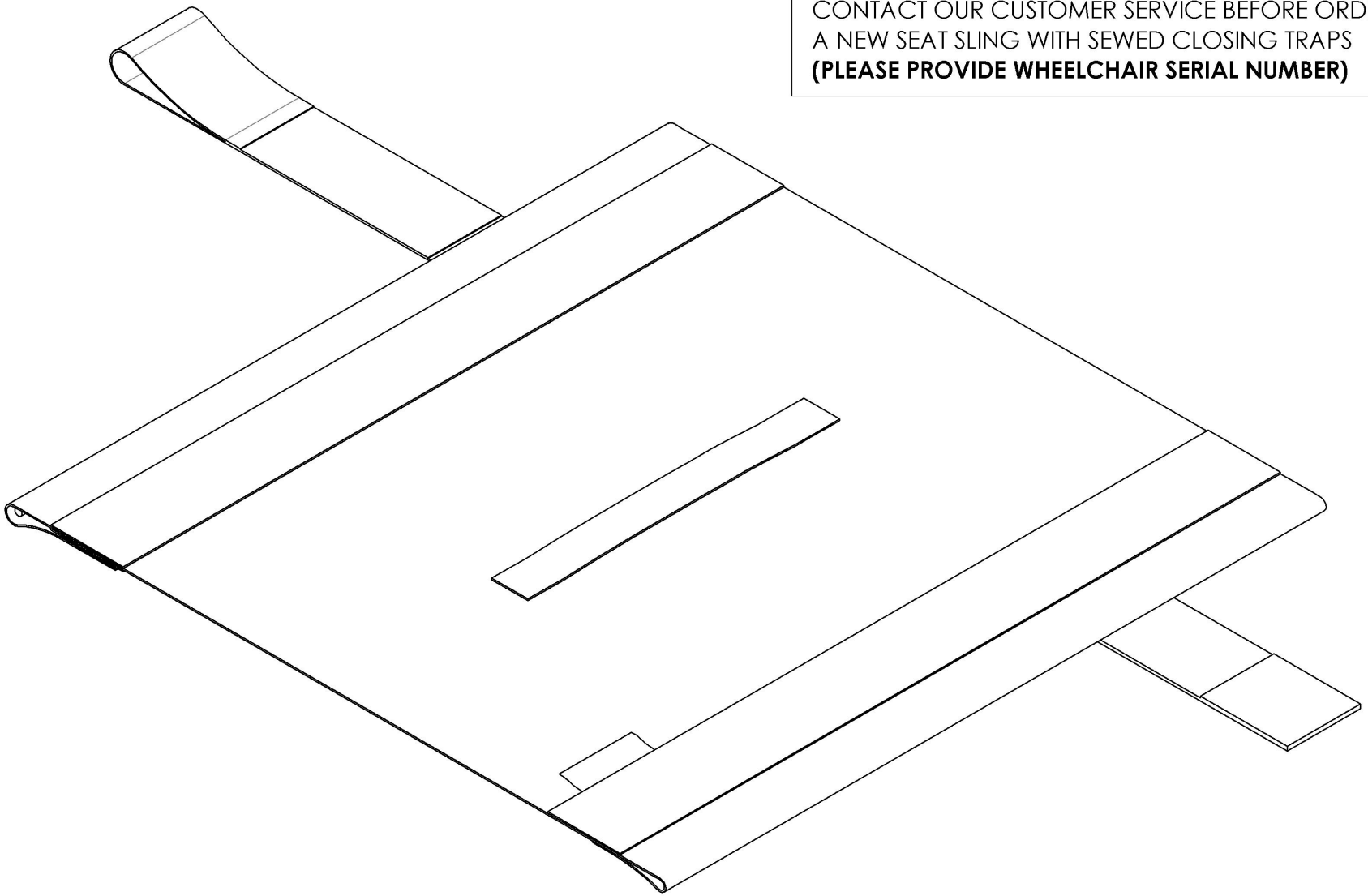

MAKE SURE TO HAVE YOUR SERIAL NUMBER
NEARBY WHEN ORDERING PARTS FOR YOUR
MOTION COMPOSITES WHEELCHAIR

Accessories Catalogue
Footrest Neopren Impact Guards

ITEM NO.	PARTNO	DESCRIPTION	QTY.
1	9001633	Footrest Impact Guard - Neoprene - Black (Pair)	1

MAKE SURE TO HAVE YOUR SERIAL NUMBER NEARBY WHEN ORDERING PARTS FOR YOUR MOTION COMPOSITES WHEELCHAIR

Accessories Catalogue
Oxygen Tank Holder

ITEM NO.	PARTNO	DESCRIPTION	QTY.
1	9001640	Oxygen Tank Holder	1

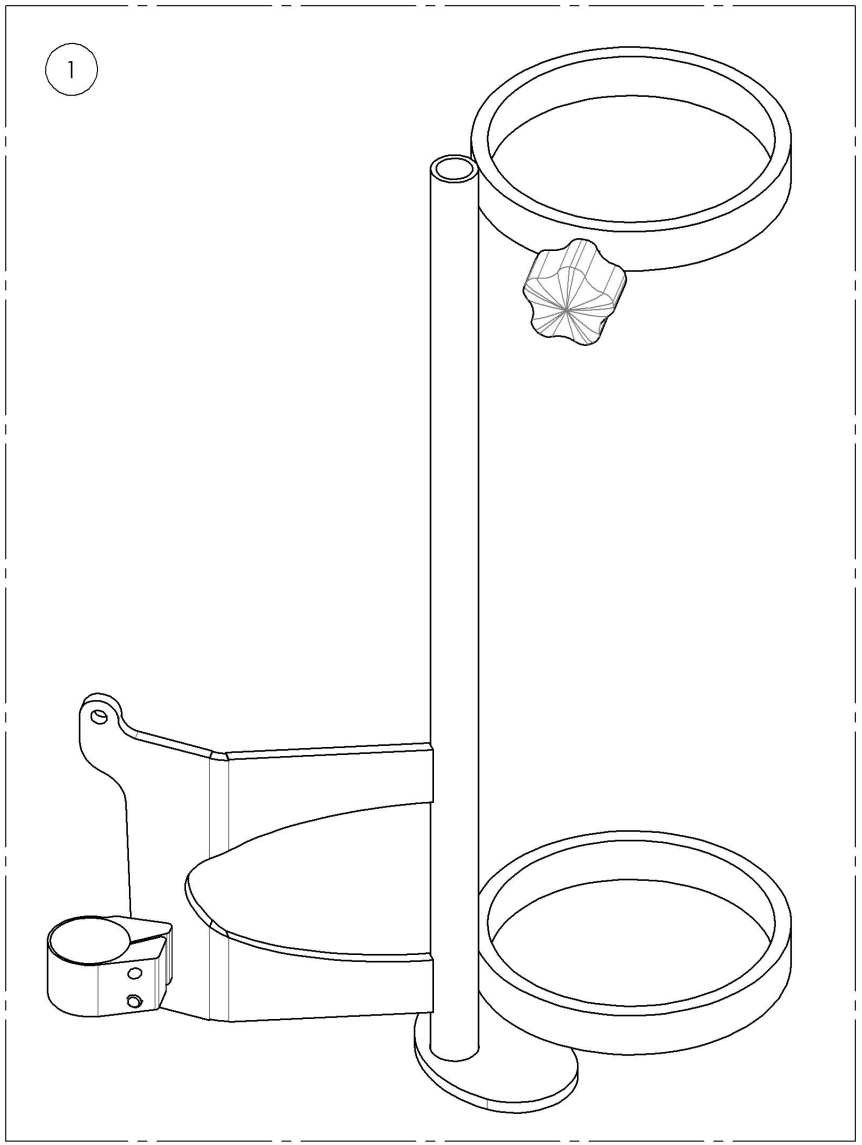

MAKE SURE TO HAVE YOUR SERIAL NUMBER NEARBY WHEN ORDERING PARTS FOR YOUR MOTION COMPOSITES WHEELCHAIR

9001640
Oxygen Tank Holder

ITEM NO.	PARTNO	DESCRIPTION	9001640 /QTY.
1	60501	OXYGEN TANK HOLDER - ASSEMBLY	1

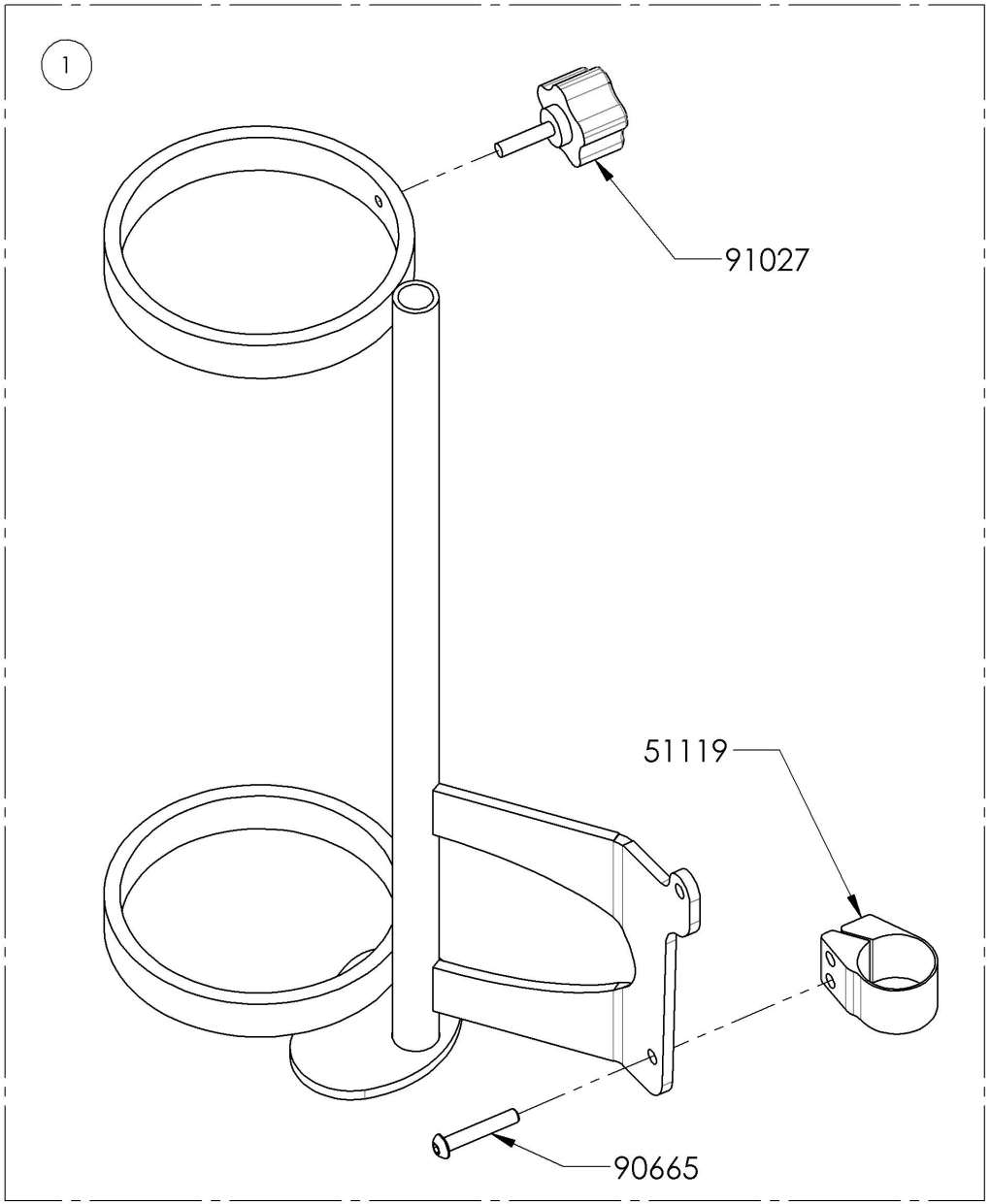

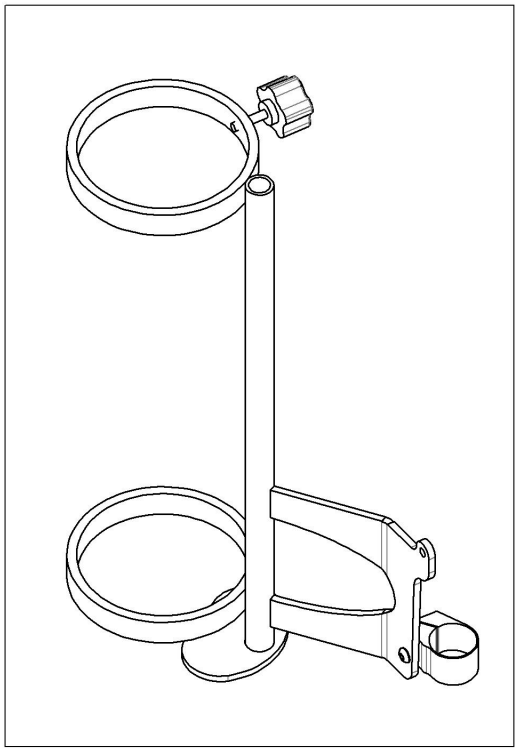

MAKE SURE TO HAVE YOUR SERIAL NUMBER NEARBY WHEN ORDERING PARTS FOR YOUR MOTION COMPOSITES WHEELCHAIR

Accessories Catalogue
Seat Pouch

ITEM NO.	PARTNO	DESCRIPTION	QTY.
1	9001634	Seat Pouch - Motion Composites	1

1

MAKE SURE TO HAVE YOUR SERIAL NUMBER NEARBY WHEN ORDERING PARTS FOR YOUR MOTION COMPOSITES WHEELCHAIR

Accessories Catalogue
Tool Kit

ITEM NO.	PARTNO	DESCRIPTION	QTY.
1	9001643	Tool Kit	1
2	9002426	Tool - Screwdriver 1.5 mm HEX	1

1

2

MAKE SURE TO HAVE YOUR SERIAL NUMBER NEARBY WHEN ORDERING PARTS FOR YOUR MOTION COMPOSITES WHEELCHAIR

9001643
Tool Kit

ITEM NO.	PARTNO	DESCRIPTION	9001643 /QTY.
1	80001	THREADED KNOB	1
2	51120	METRIC TOOL KIT	1
3	80002	3º TOOL	1

MAKE SURE TO HAVE YOUR SERIAL NUMBER NEARBY WHEN ORDERING PARTS FOR YOUR MOTION COMPOSITES WHEELCHAIR

ITEM NO.	PART NO.	DESCRIPTION	QTY.
1	9001635	T-Shirt - Motion Composites Small	1
2	9001636	T-Shirt - Motion Composites Medium	1
3	9001637	T-Shirt - Motion Composites Large	1
4	9001638	T-Shirt - Motion Composites X-Large	1
5	9001639	T-Shirt - Motion Composites XX-Large	1

DISCONTINUED

MAKE SURE TO HAVE YOUR SERIAL NUMBER NEARBY WHEN ORDERING PARTS FOR YOUR MOTION COMPOSITES WHEELCHAIR

Acccessories Catalogue
Motion Composites Polo

ITEM NO.	PARTNO	DESCRIPTION	QTY
1	9003049	Polo - Motion Composites, Men, Small	1
2	9003050	Polo - Motion Composites, Men, Medium	1
3	9003051	Polo - Motion Composites, Men, Large	1
4	9003052	Polo - Motion Composites, Men, X-Large	1
5	9003053	Polo - Motion Composites, Men, 2X-Large	1
6	9003054	Polo - Motion Composites, Men, 3X-Large	1
7	9003055	Polo - Motion Composites, Men, 4X-Large	1
8	9003056	Polo - Motion Composites, Women, Small	1
9	9003057	Polo - Motion Composites, Women, Medium	1
10	9003058	Polo - Motion Composites, Women, Large	1

MAKE SURE TO HAVE YOUR SERIAL NUMBER NEARBY WHEN ORDERING PARTS FOR YOUR MOTION COMPOSITES WHEELCHAIR

Accessories Catalogue
Newton Backpack

ITEM NO.	PARTNO	DESCRIPTION	QTY
1	9003059	Backpack - Newton	1

MAKE SURE TO HAVE YOUR SERIAL NUMBER NEARBY WHEN ORDERING PARTS FOR YOUR MOTION COMPOSITES WHEELCHAIR

Accessories Catalogue
Bodypoint Mobility Bag

ITEM NO.	PARTNO	DESCRIPTION	QTY
1	9007794	Bag - Bodypoint Mobility	1

1

MAKE SURE TO HAVE YOUR SERIAL NUMBER NEARBY WHEN ORDERING PARTS FOR YOUR MOTION COMPOSITES WHEELCHAIR

Color Options Catalogue
Helio Stickers

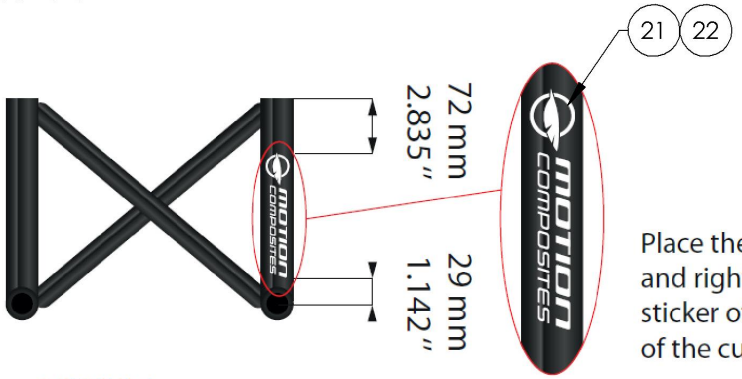

Place the sticker on the inside of the footrest left and right, about 45° forward (A) to release the sticker of the weld. Align sticker left side at the end of the curve (B) of the footrest.

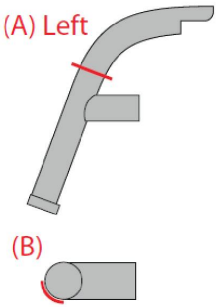

RIGHT

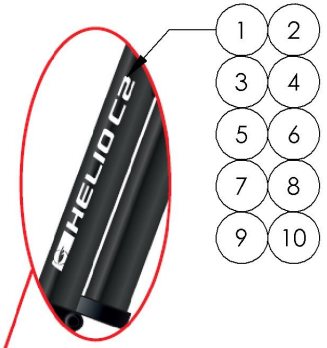

LEFT

Aligned the grooves of the stickers with the crossbrace tab on frame

Place the sticker on superior part of frame tube at aproximaly 45°

ITEM NO.	PARTNO	DESCRIPTION	QTY.
1	9001061	Sticker - Helio C2, Footrest, Left - Black	1
2	9001060	Sticker - Helio C2, Footrest, Left - White	1
3	9001063	Sticker - Helio A7, Footrest, Left - Black	1
4	9001062	Sticker - Helio A7, Footrest, Left - White	1
5	9001065	Sticker - Helio Kids, Footrest, Left - Black	1
6	9001064	Sticker - Helio Kids, Footrest, Left - White	1
7	9001067	Sticker - Helio XC2, Footrest, Left - Black	1
8	9001066	Sticker - Helio XC2, Footrest, Left - White	1
9	9003297	Sticker - Helio A6, Footrest, Left - Black	1
10	9003296	Sticker - Helio A6, Footrest, Left - White	1
11	9002397	Sticker - Helio C2, Frame, Bottom Tube - Black (Pair)	1
12	9002398	Sticker - Helio C2, Frame, Bottom Tube - White (Pair)	1
13	9002399	Sticker - Helio A7, Frame, Bottom Tube - Black (Pair)	1
14	9002400	Sticker - Helio A7, Frame, Bottom Tube - White (Pair)	1
15	9002401	Sticker - Helio Kids, Frame, Bottom Tube - Black (Pair)	1
16	9002402	Sticker - Helio Kids, Frame, Bottom Tube - White (Pair)	1
17	9002403	Sticker - Helio XC2, Frame, Bottom Tube - Black (Pair)	1
18	9002404	Sticker - Helio XC2, Frame, Bottom Tube - White (Pair)	1
19	9003295	Sticker - Helio A6, Frame, Bottom Tube - Black (Pair)	1
20	9003294	Sticker - Helio A6, Frame, Bottom Tube - White (Pair)	1
21	9002439	Sticker - Motion Composites, Frame, Rear Tube, Right - Black	1
22	9002440	Sticker - Motion Composites, Frame, Rear Tube, Right - White	1

MAKE SURE TO HAVE YOUR SERIAL NUMBER NEARBY WHEN ORDERING PARTS FOR YOUR MOTION COMPOSITES WHEELCHAIR

Color Options Catalogue
Color Swatch

ITEM NO.	PARTNO	DESCRIPTION	QTY
1	9001069	Color Swatch - All Colors, Key Ring Assembly	1

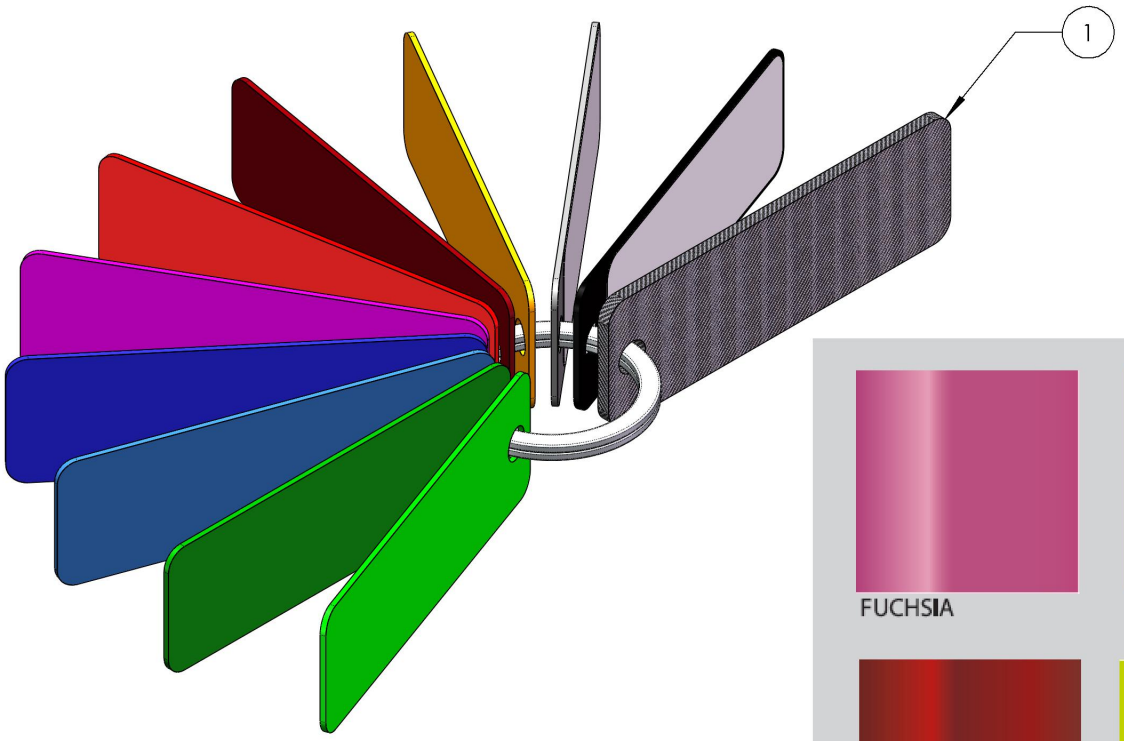

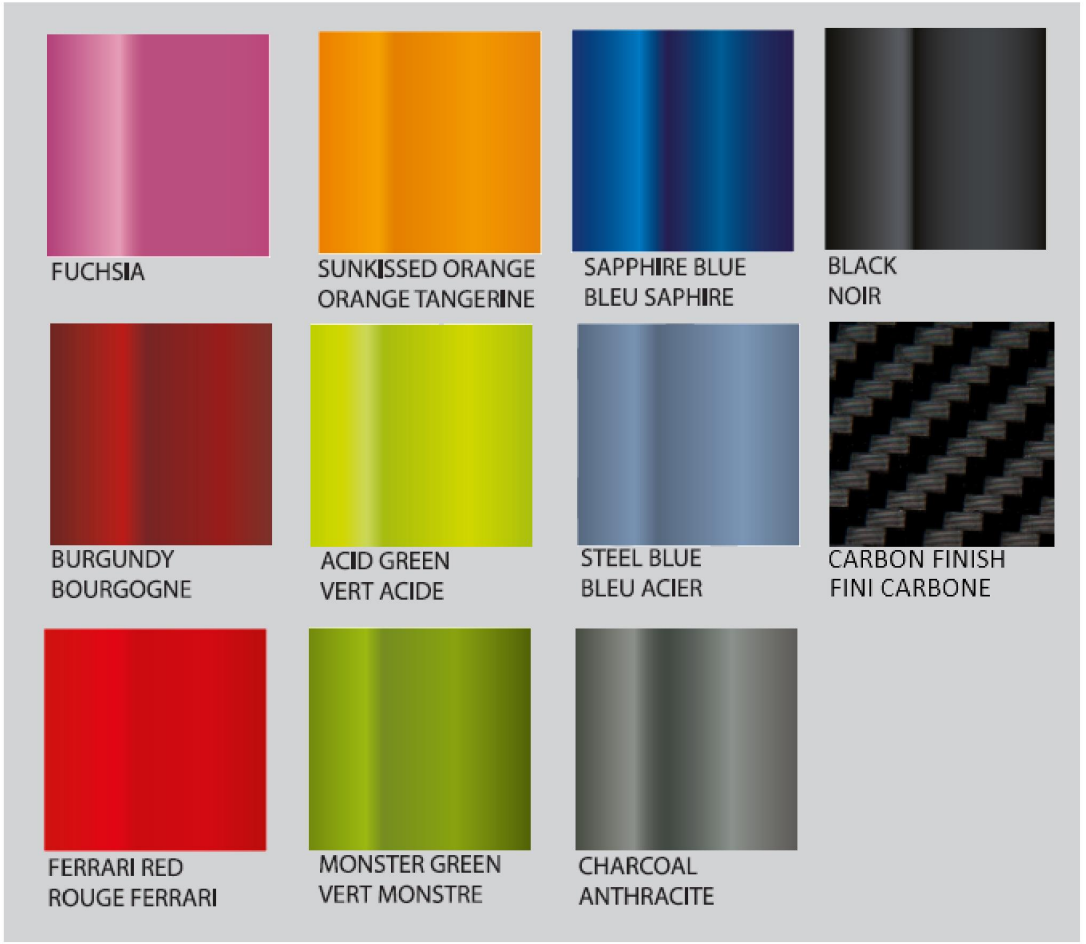

MAKE SURE TO HAVE YOUR SERIAL NUMBER NEARBY WHEN ORDERING PARTS FOR YOUR MOTION COMPOSITES WHEELCHAIR

Color Options Catalogue
Color Touch-Up

ITEM NO.	PARTNO	DESCRIPTION	QTY
1	9003033	Color Touch Up - Fuchsia	1
2	9003034	Color Touch Up - Burgundy	1
3	9003035	Color Touch Up - Ferrari Red	1
4	9003036	Color Touch Up - Sunkissed Orange	1
5	9003037	Color Touch Up - Acid Green	1
6	9003038	Color Touch Up - Monster Green	1
7	9003039	Color Touch Up - Sapphire Blue	1
8	9003040	Color Touch Up - Steel Blue	1
9	9003041	Color Touch Up - Charcoal	1
10	9003042	Color Touch Up - Black	1

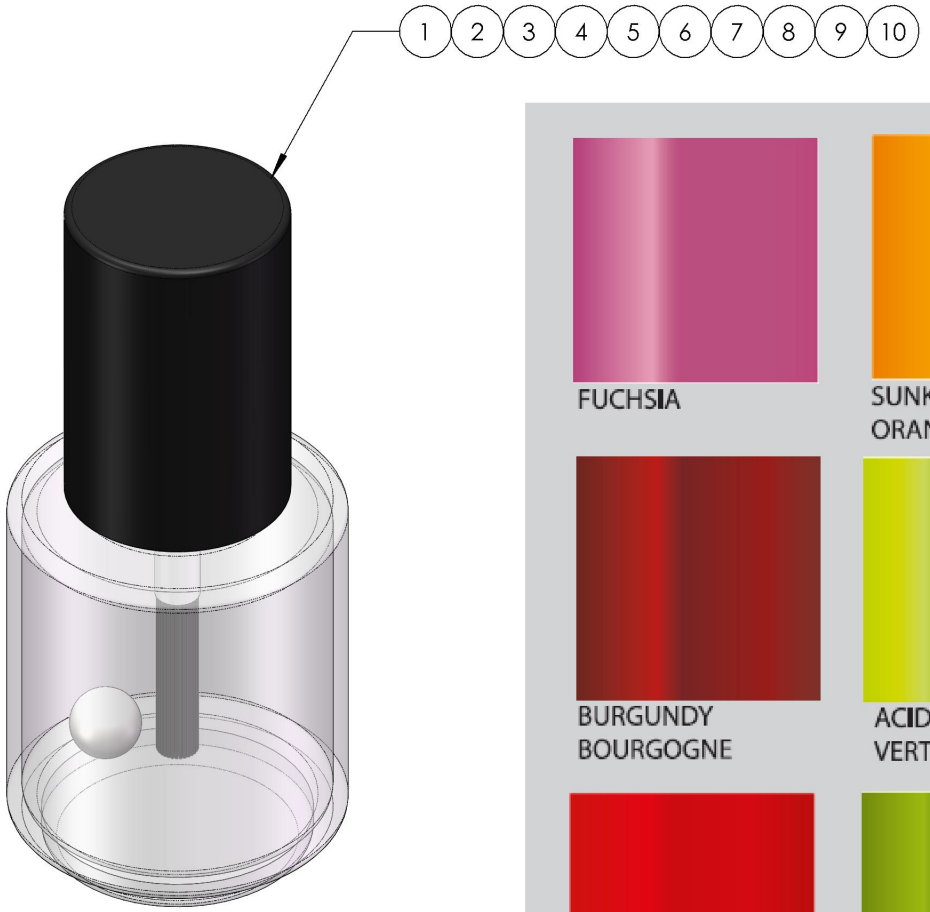

MAKE SURE TO HAVE YOUR SERIAL NUMBER NEARBY WHEN ORDERING PARTS FOR YOUR MOTION COMPOSITES WHEELCHAIR

Quick Order Catalogue
Flip Back Type 2 Complete Armrest

ITEM NO.	PARTNO	DESCRIPTION	QTY
1	9002888	Flip Back Type 2 Complete Armrest, 8-12 in, Desk Length, Right	1
2	9002892	Flip Back Type 2 Complete Armrest, 8-12 in, Desk Length, Left	1
3	9002889	Flip Back Type 2 Complete Armrest, 10-14 in, Desk Length, Right	1
4	9002893	Flip Back Type 2 Complete Armrest, 10-14 in, Desk Length, Left	1
5	9002890	Flip Back Type 2 Complete Armrest, 8-12 in, Full Length, Right	1
6	9002894	Flip Back Type 2 Complete Armrest, 8-12 in, Full Length , Left	1
7	9002891	Flip Back Type 2 Complete Armrest, 10-14 in, Full Length, Right	1
8	9002895	Flip Back Type 2 Complete Armrest, 10-14 in, Full Length, Left	1

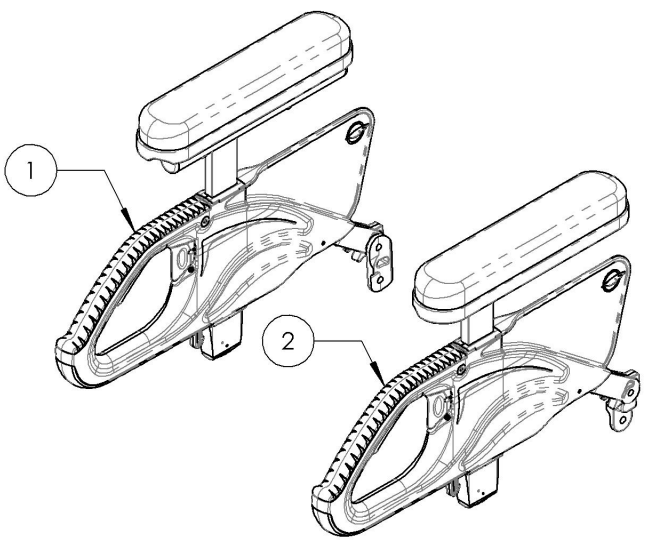

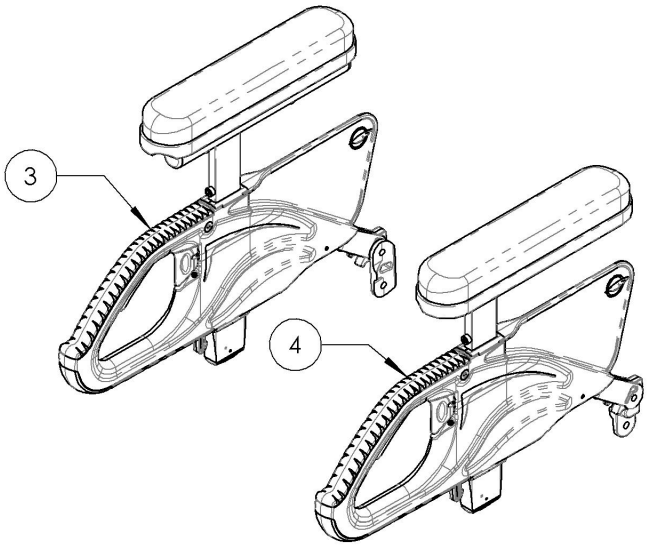

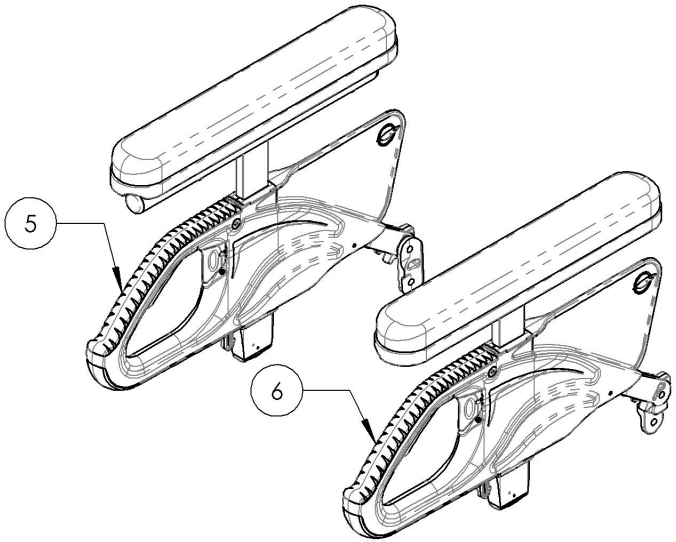

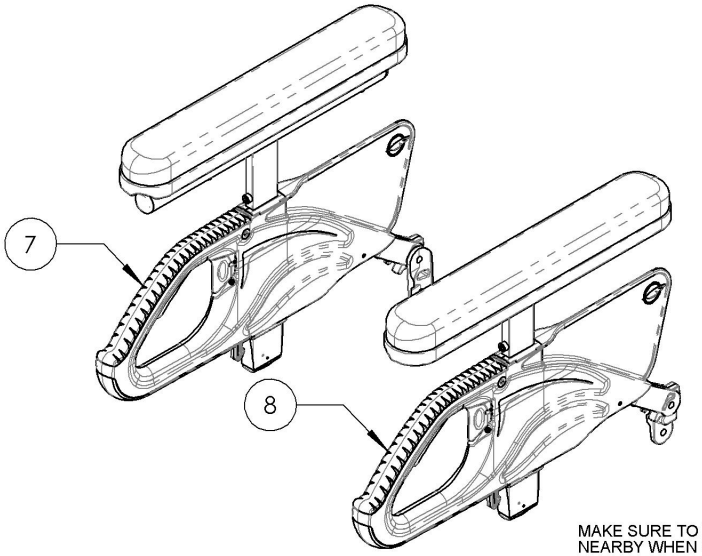

MAKE SURE TO HAVE YOUR SERIAL NUMBER NEARBY WHEN ORDERING PARTS FOR YOUR MOTION COMPOSITES WHEELCHAIR

9002888_9002891
Flip Back Type 2 Complete Armrest, Desk & Full Length, Right

ITEM NO.	PARTNO	DESCRIPTION	9002888 /QTY.	9002889 /QTY.	9002890 /QTY.	9002891 /QTY.
1	33554	V2 ARMREST - MAIN BODY	1	1	1	1
2	33038	ARMREST DESK PAD	1	1	-	-
3	33039	ARMREST FULL LENGTH PAD	-	-	1	1
4	33579	V2 ARMREST STRUCTURE 8-12" FOR DESK LENGTH - ASSEMBLY	1	-	-	-
5	33580	V2 ARMREST STRUCTURE 10-14" FOR DESK LENGTH - ASSEMBLY	-	1	-	-
6	33559	V2 ARMREST STRUCTURE 8-12" FOR FULL LENGTH - ASSEMBLY	-	-	1	-
7	33560	V2 ARMREST STRUCTURE 10-14" FOR FULL LENGTH - ASSEMBLY	-	-	-	1
8	99013	SCREW PHILLIPS PAN HD #10_32 X 1_1_2 + BLUE THREADLOCKER	2	2	2	2
9	33558	V2 ARMREST REAR PIVOT - ASSEMBLY	1	1	1	1

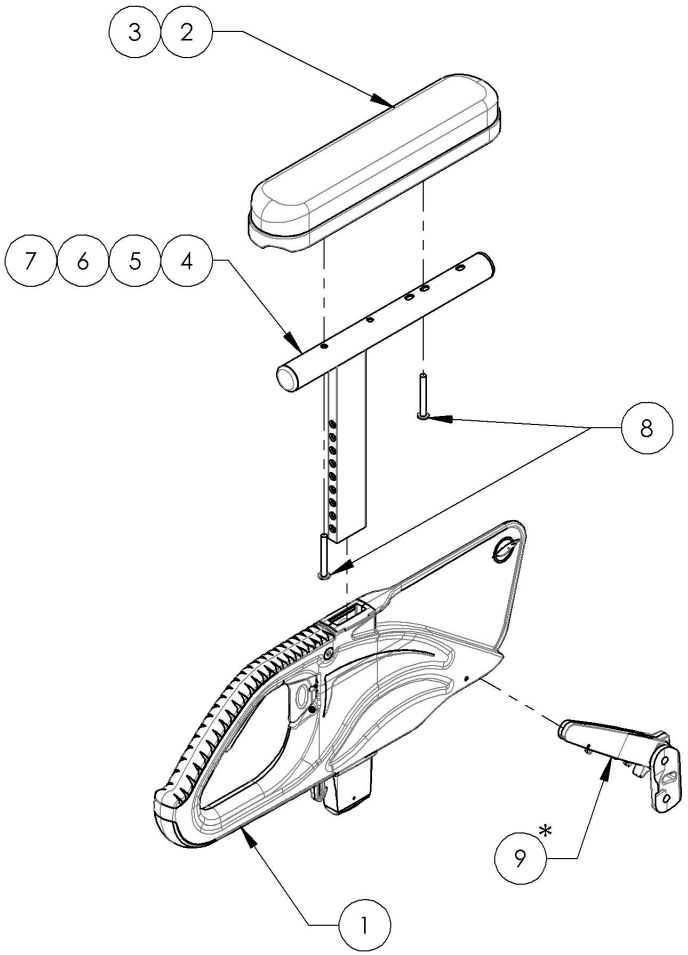

* DOUBLE TRIGGER INSTALLATION OPTIONS	
STANDARD RELEASE	LOCK POSITION
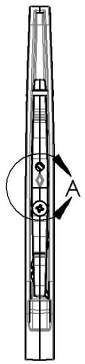	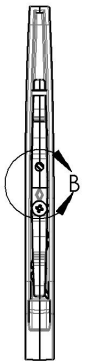
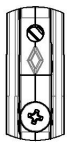 DETAIL A	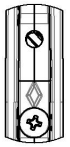 DETAIL B
NOTICE THE DIRECTION OF THE DIAMOND SHAPE ON THE TRIGGER, HIS DISTANCE FROM THE SCREW INDICATES THE CONFIGURATION USED	

9002888
Flip Back Type 2 Complete Armrest,
8-12 in, Desk Length, Right

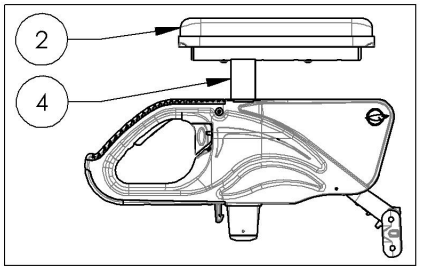

9002889
Flip Back Type 2 Complete Armrest,
10-14 in, Desk Length, Right

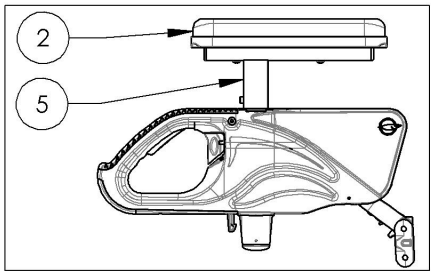

9002890
Flip Back Type 2 Complete Armrest,
8-12 in, Full Length, Right

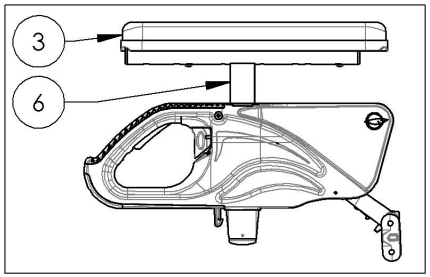

9002891
Flip Back Type 2 Complete Armrest,
10-14 in, Full Length, Right

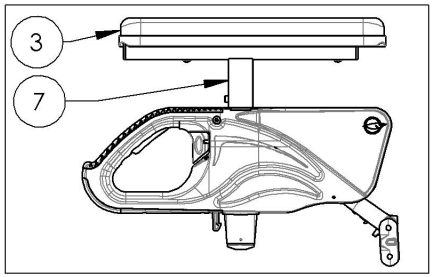

MAKE SURE TO HAVE YOUR SERIAL NUMBER NEARBY WHEN ORDERING PARTS FOR YOUR MOTION COMPOSITES WHEELCHAIR

9002892_9002895
Flip Back Type 2 Complete Armrests, Desk & Full Length, Left

ITEM NO.	PARTNO	DESCRIPTION	9002892 /QTY.	9002893 /QTY.	9002894 /QTY.	9002895 /QTY.
1	33554	V2 ARMREST - MAIN BODY	1	1	1	1
2	33038	ARMREST DESK PAD	1	1	-	-
3	33039	ARMREST FULL LENGTH PAD	-	-	1	1
4	33579	V2 ARMREST STRUCTURE 8-12" FOR DESK LENGTH - ASSEMBLY	1	-	-	-
5	33580	V2 ARMREST STRUCTURE 10-14" FOR DESK LENGTH - ASSEMBLY	-	1	-	-
6	33559	V2 ARMREST STRUCTURE 8-12" FOR FULL LENGTH - ASSEMBLY	-	-	1	-
7	33560	V2 ARMREST STRUCTURE 10-14" FOR FULL LENGTH - ASSEMBLY	-	-	-	1
8	99013	SCREW PHILLIPS PAN HD #10_32 X 1_1_2 + BLUE THREADLOCKER	2	2	2	2
9	33558	V2 ARMREST REAR PIVOT - ASSEMBLY	1	1	1	1

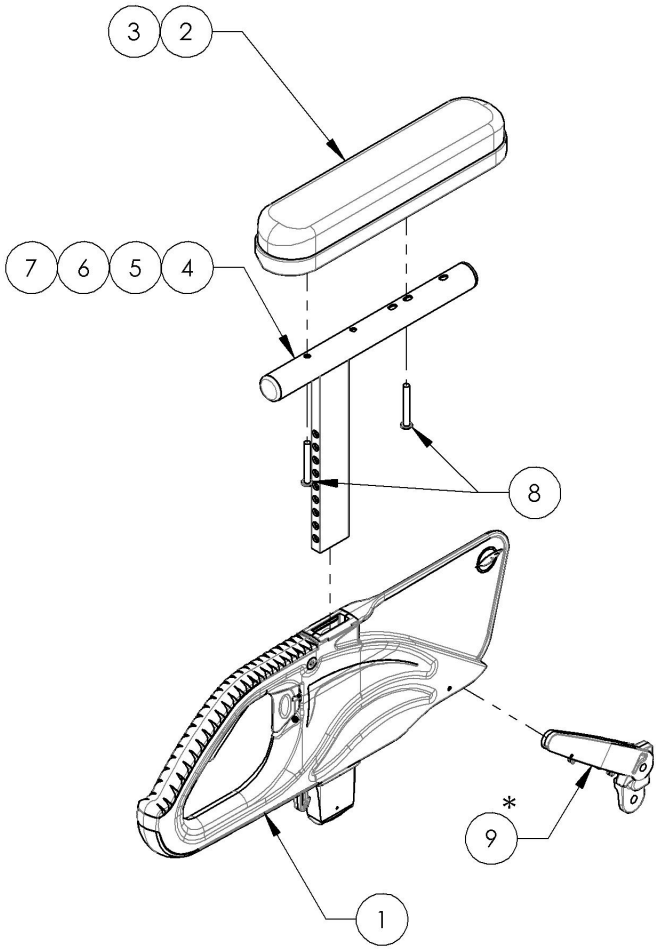

* DOUBLE TRIGGER INSTALLATION OPTIONS

STANDARD RELEASE	LOCK POSITION
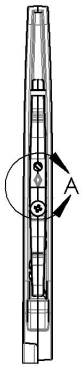	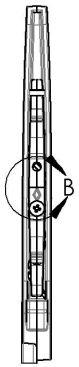
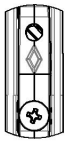	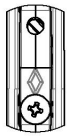
DETAIL A	DETAIL B

NOTICE THE DIRECTION OF THE DIAMOND SHAPE ON THE TRIGGER, HIS DISTANCE FROM THE SCREW INDICATES THE CONFIGURATION USED

9002892
Flip Back Type 2 Complete Armrest, 8-12 in, Desk Length, Left

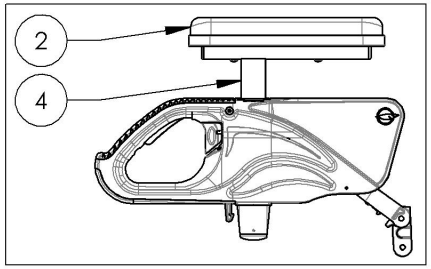

9002893
Flip Back Type 2 Complete Armrest, 10-14 in, Desk Length, Left

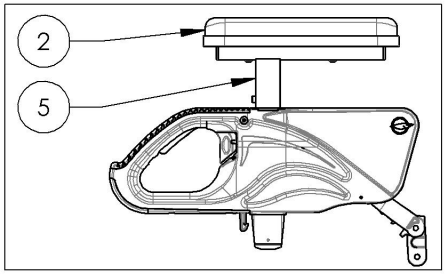

9002894
Flip Back Type 2 Complete Armrest, 8-12 in, Full Length , Left

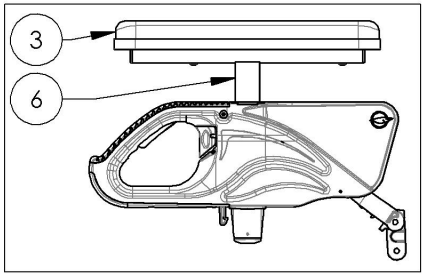

9002895
Flip Back Type 2 Complete Armrest, 10-14 in, Full Length, Left

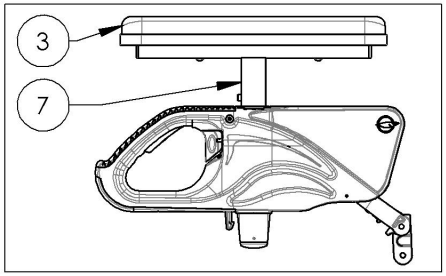

MAKE SURE TO HAVE YOUR SERIAL NUMBER NEARBY WHEN ORDERING PARTS FOR YOUR MOTION COMPOSITES WHEELCHAIR

Quick Order Catalogue
Complete Armrest Type 2 Pair Assembly

ITEM NO.	PARTNO	DESCRIPTION	QTY.
1	9002524	T Type Complete Armrest, 8-12 in, Desk Length (Pair)	1
2	9002525	T Type Complete Armrest, 10-14 in, Desk Length (Pair)	1
3	9002526	T Type Complete Armrest, 8-12 in, Full Length (Pair)	1
4	9002527	T Type Complete Armrest, 10-14 in, Full Length (Pair)	1
5 *	9002528	Flip Back Type 2 Complete Armrest, 8-12 in, Desk Length (Pair)	1
6 *	9002529	Flip Back Type 2 Complete Armrest, 10-14 in, Desk Length (Pair)	1
7 *	9002530	Flip Back Type 2 Complete Armrest, 8-12 in, Full Length (Pair)	1
8 *	9002531	Flip Back Type 2 Complete Armrest, 10-14 in, Full Length (Pair)	1
9	9002937	T Type Complete Armrest, 8-12 in, Gel Pad, Full Length (Pair)	1
10	9002938	T Type Complete Armrest, 10-14 in, Gel Pad, Full Length (Pair)	1
11*	9002941	Flip Back Type 2 Complete Armrest, 8-12 in, Gel Pad, Full Length (Pair)	1
12*	9002942	Flip Back Type 2 Complete Armrest, 10-14 in, Gel Pad, Full Length (Pair)	1

*:NOT AVAILABLE FOR KIDS & APEX WHEELCHAIRS

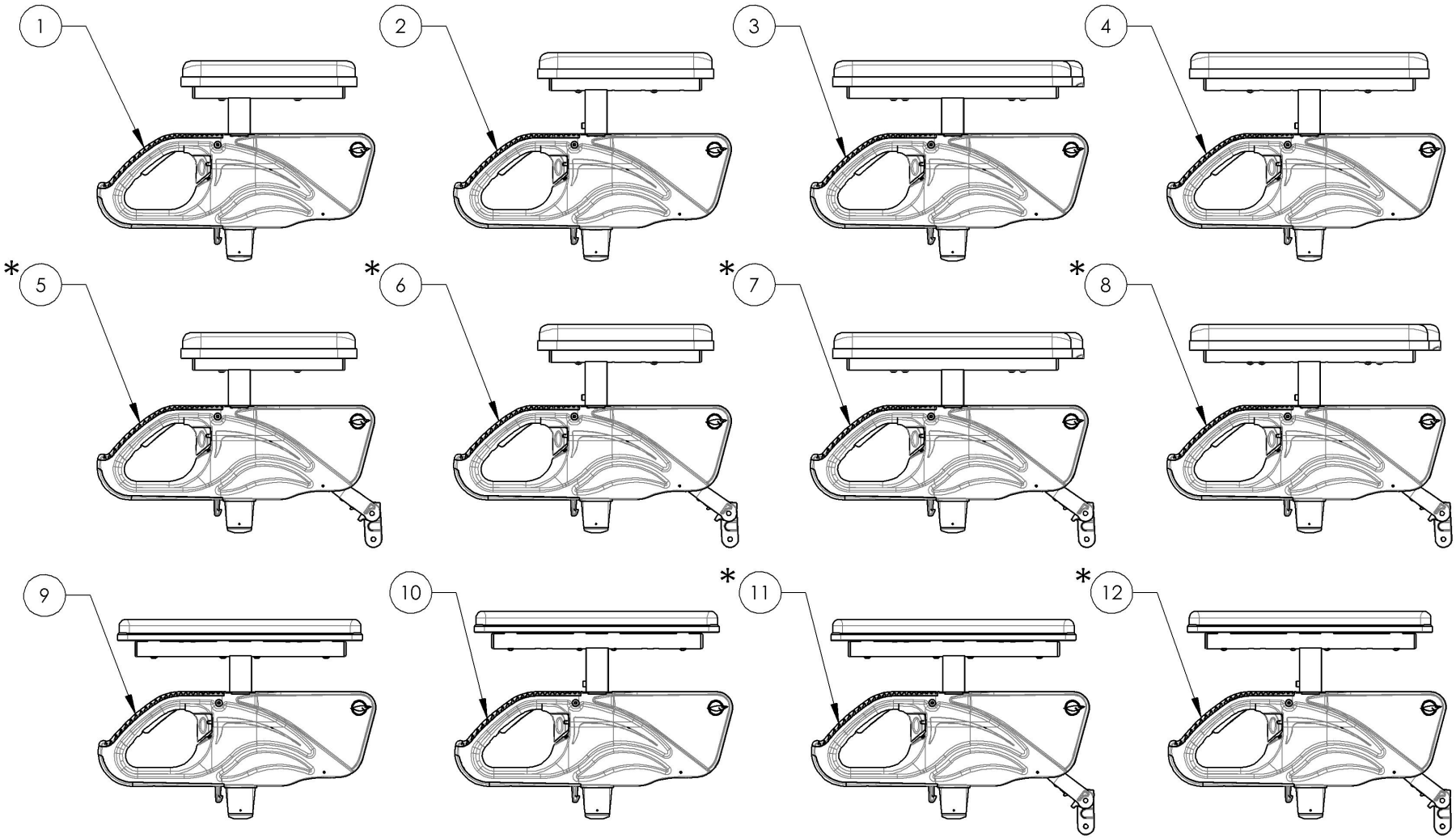

MAKE SURE TO HAVE YOUR SERIAL NUMBER NEARBY WHEN ORDERING PARTS FOR YOUR MOTION COMPOSITES WHEELCHAIR

9002524_9002527
T Type Complete Armrests, Desk & Full Length (Pair)

ITEM NO.	PARTNO	DESCRIPTION	9002524 /QTY.	9002525 /QTY.	9002526 /QTY.	9002527 /QTY.
1	33554	V2 ARMREST - MAIN BODY	2	2	2	2
2	33579	V2 ARMREST STRUCTURE 8-12" FOR DESK LENGTH - ASSEMBLY	2	-	-	-
3	33580	V2 ARMREST STRUCTURE 10-14" FOR DESK LENGTH - ASSEMBLY	-	2	-	-
4	33559	V2 ARMREST STRUCTURE 8-12" FOR FULL LENGTH - ASSEMBLY	-	-	2	-
5	33560	V2 ARMREST STRUCTURE 10-14" FOR FULL LENGTH - ASSEMBLY	-	-	-	2
6	33038	ARMREST DESK PAD	2	2	-	-
7	33039	ARMREST FULL LENGTH PAD	-	-	2	2
8	99013	SCREW PHILLIPS PAN HD #10_32 X 1_1_2 + BLUE THREADLOCKER	4	4	4	4

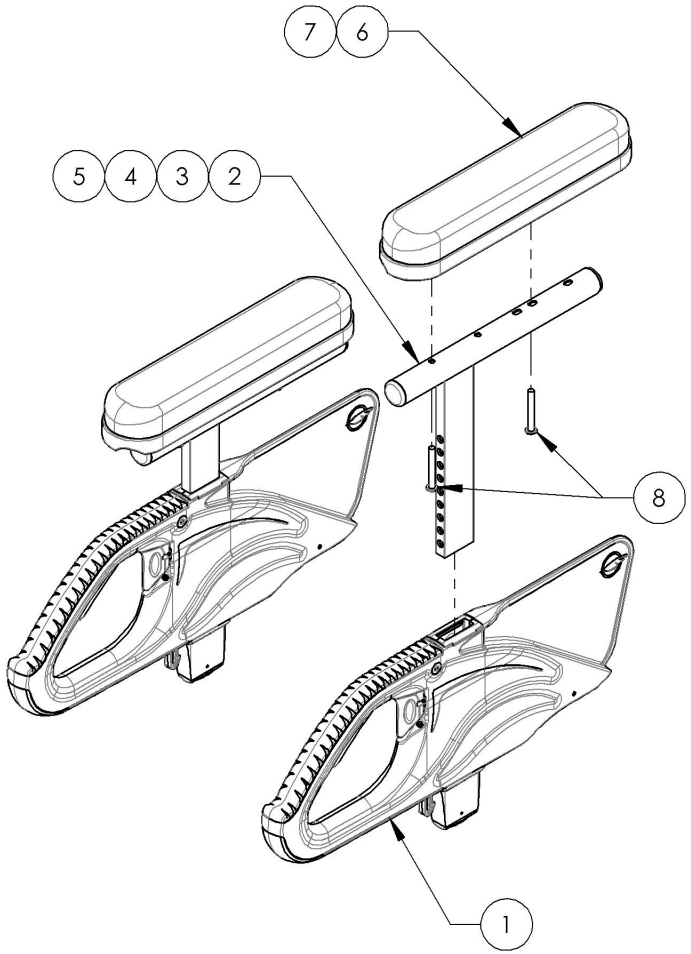

9002524
T Type Complete Armrest, 8-12 in,
Desk Length (Pair)

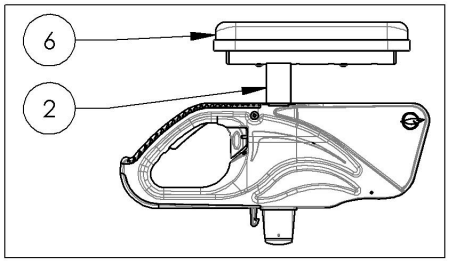

9002525
T Type Complete Armrest, 10-14 in,
Desk Length (Pair)

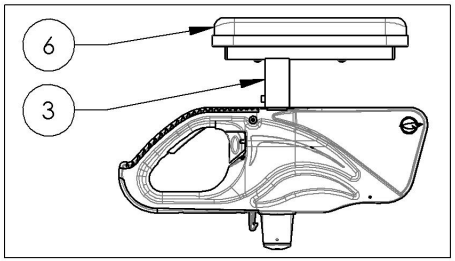

9002526
T Type Complete Armrest, 8-12 in,
Full Length (Pair)

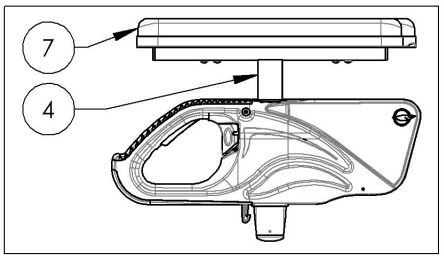

9002527
T Type Complete Armrest, 10-14 in,
Full Length (Pair)

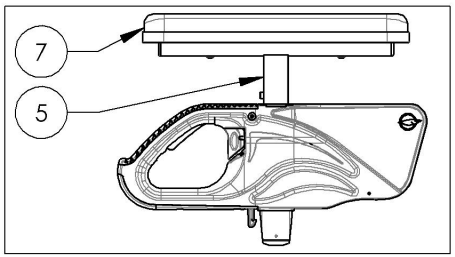

MAKE SURE TO HAVE YOUR SERIAL NUMBER NEARBY WHEN ORDERING PARTS FOR YOUR MOTION COMPOSITES WHEELCHAIR

9002528_9002531
Flip Back Type 2 Complete Armrests, Desk & Full Length (Pair)

ITEM NO.	PARTNO	DESCRIPTION	9002528 /QTY.	9002529 /QTY.	9002530 /QTY.	9002531 /QTY.
1	33554	V2 ARMREST - MAIN BODY	2	2	2	2
2	33038	ARMREST DESK PAD	2	2	-	-
3	33039	ARMREST FULL LENGTH PAD	-	-	2	2
4	33579	V2 ARMREST STRUCTURE 8-12" FOR DESK LENGTH - ASSEMBLY	2	-	-	-
5	33580	V2 ARMREST STRUCTURE 10-14" FOR DESK LENGTH - ASSEMBLY	-	2	-	-
6	33559	V2 ARMREST STRUCTURE 8-12" FOR FULL LENGTH - ASSEMBLY	-	-	2	-
7	33560	V2 ARMREST STRUCTURE 10-14" FOR FULL LENGTH - ASSEMBLY	-	-	-	2
8	99013	SCREW PHILLIPS PAN HD #10_32 X 1_1_2 + BLUE THREADLOCKER	4	4	4	4
9	33558	V2 ARMREST REAR PIVOT - ASSEMBLY	2	2	2	2

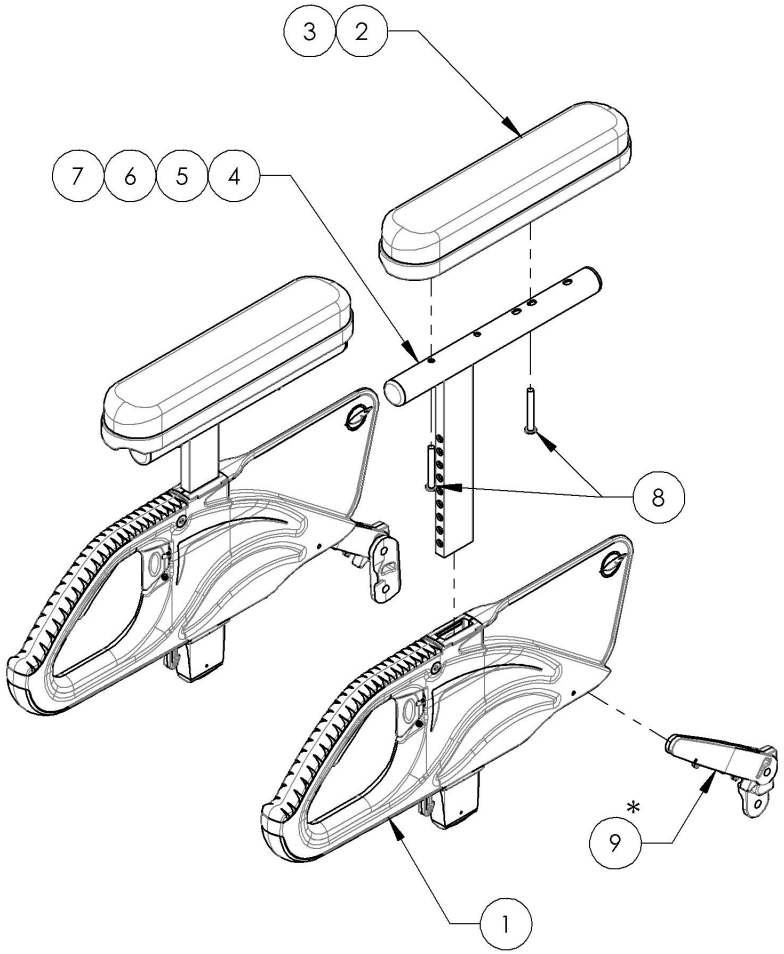

* DOUBLE TRIGGER INSTALLATION OPTIONS	
STANDARD RELEASE	LOCK POSITION
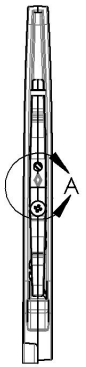	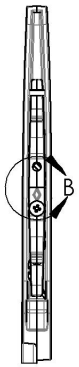
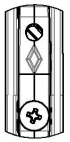	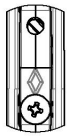
DETAIL A	DETAIL B
NOTICE THE DIRECTION OF THE DIAMOND SHAPE ON THE TRIGGER, HIS DISTANCE FROM THE SCREW INDICATES THE CONFIGURATION USED	

9002528
Flip Back Type 2 Complete Armrest, 8-12 in, Desk Length (Pair)

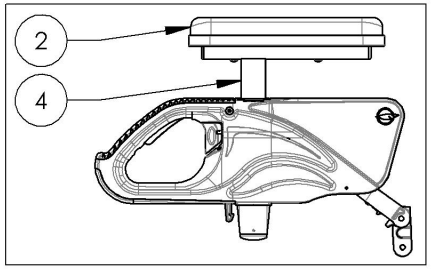

9002529
Flip Back Type 2 Complete Armrest, 10-14 in, Desk Length (Pair)

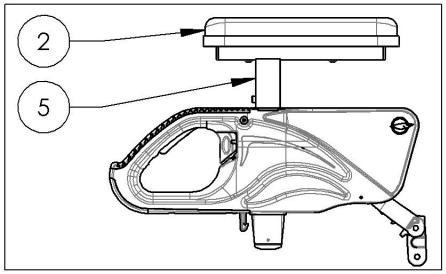

9002530
Flip Back Type 2 Complete Armrest, 8-12 in, Full Length (Pair)

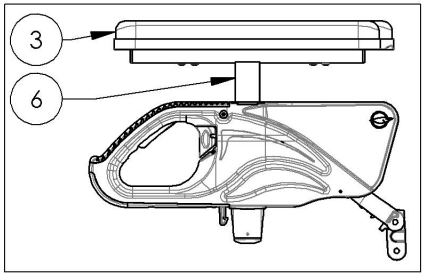

9002531
Flip Back Type 2 Complete Armrest, 10-14 in, Full Length (Pair)

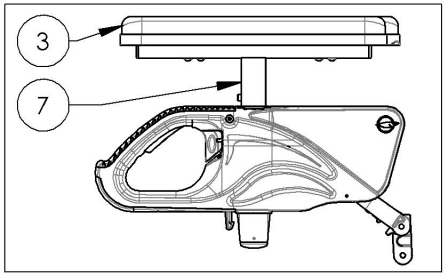

MAKE SURE TO HAVE YOUR SERIAL NUMBER NEARBY WHEN ORDERING PARTS FOR YOUR MOTION COMPOSITES WHEELCHAIR

9002937_9002938
T Type Complete Armrest, Gel Pad, Full Length (Pair)

ITEM NO.	PARTNO	DESCRIPTION	9002937 /QTY.	9002938 /QTY.
1	33554	V2 ARMREST - MAIN BODY	2	2
2	33559	V2 ARMREST STRUCTURE 8-12" FOR FULL LENGTH - ASSEMBLY	2	-
3	33560	V2 ARMREST STRUCTURE 10-14" FOR FULL LENGTH - ASSEMBLY	-	2
4	33077	OVATION GEL ARMREST PAD 2x14in, FULL LENGTH	2	2

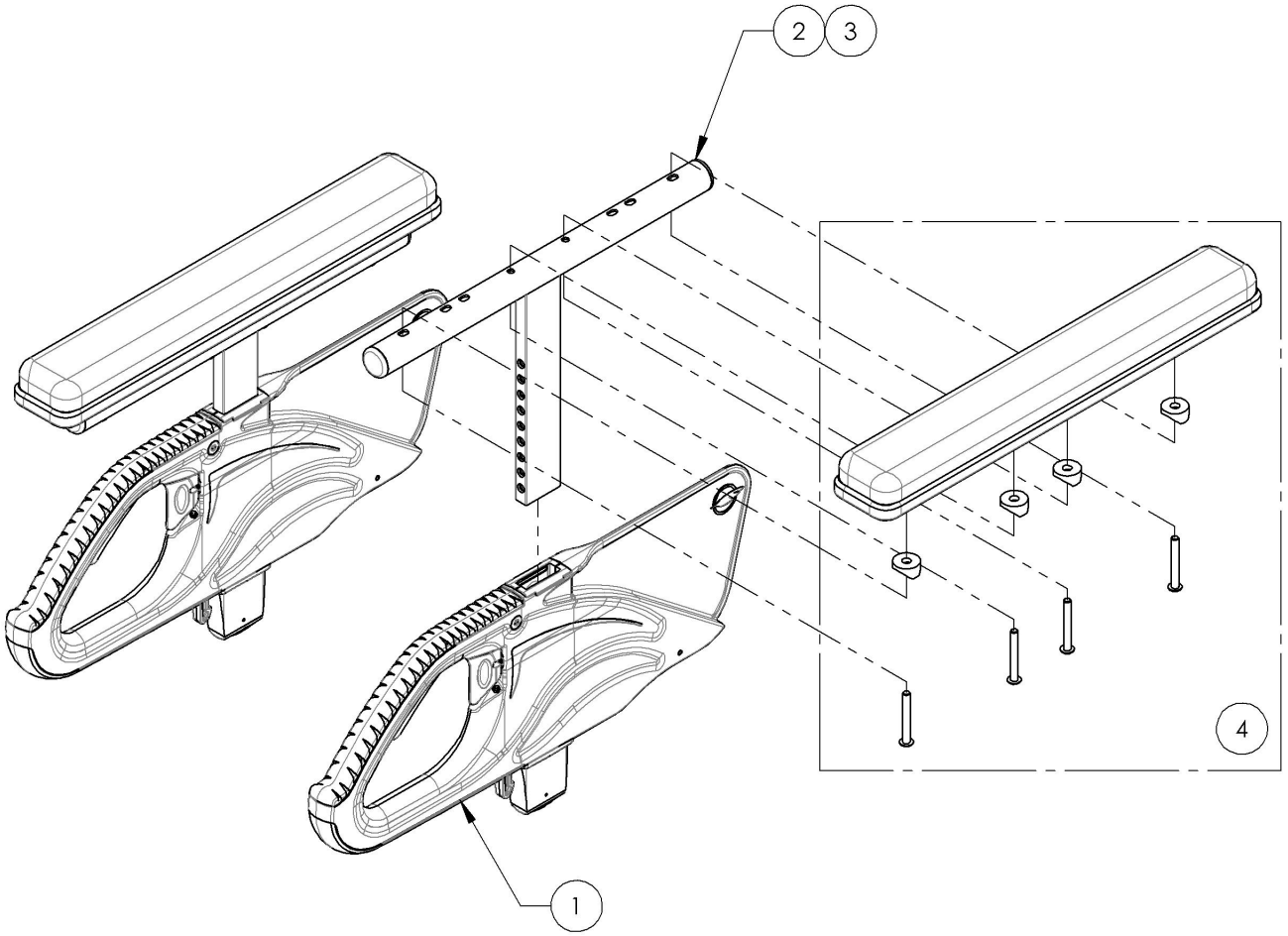

9002937
T Type Complete Armrest, 8-12 in, Gel Pad, Full Length (Pair)

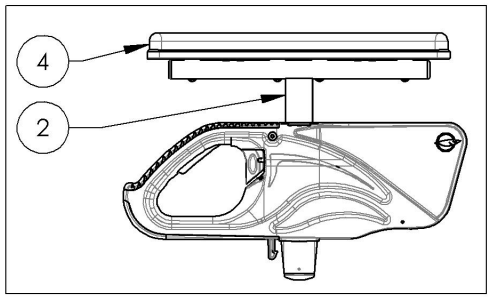

9002938
T Type Complete Armrest, 10-14 in, Gel Pad, Full Length (Pair)

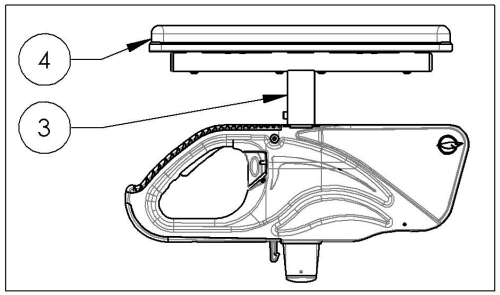

MAKE SURE TO HAVE YOUR SERIAL NUMBER NEARBY WHEN ORDERING PARTS FOR YOUR MOTION COMPOSITES WHEELCHAIR

9002941_9002942
Flip Back Type 2 Complete Armrest, Gel Pad, Full Length (Pair)

ITEM NO.	PARTNO	DESCRIPTION	9002941 /QTY.	9002942 /QTY.
1	33554	V2 ARMREST - MAIN BODY	2	2
2	33559	V2 ARMREST STRUCTURE 8-12" FOR FULL LENGTH - ASSEMBLY	2	-
3	33560	V2 ARMREST STRUCTURE 10-14" FOR FULL LENGTH - ASSEMBLY	-	2
4	33077	OVATION GEL ARMREST PAD 2x14in, FULL LENGTH	2	2
5	33558	V2 ARMREST REAR PIVOT - ASSEMBLY	2	2

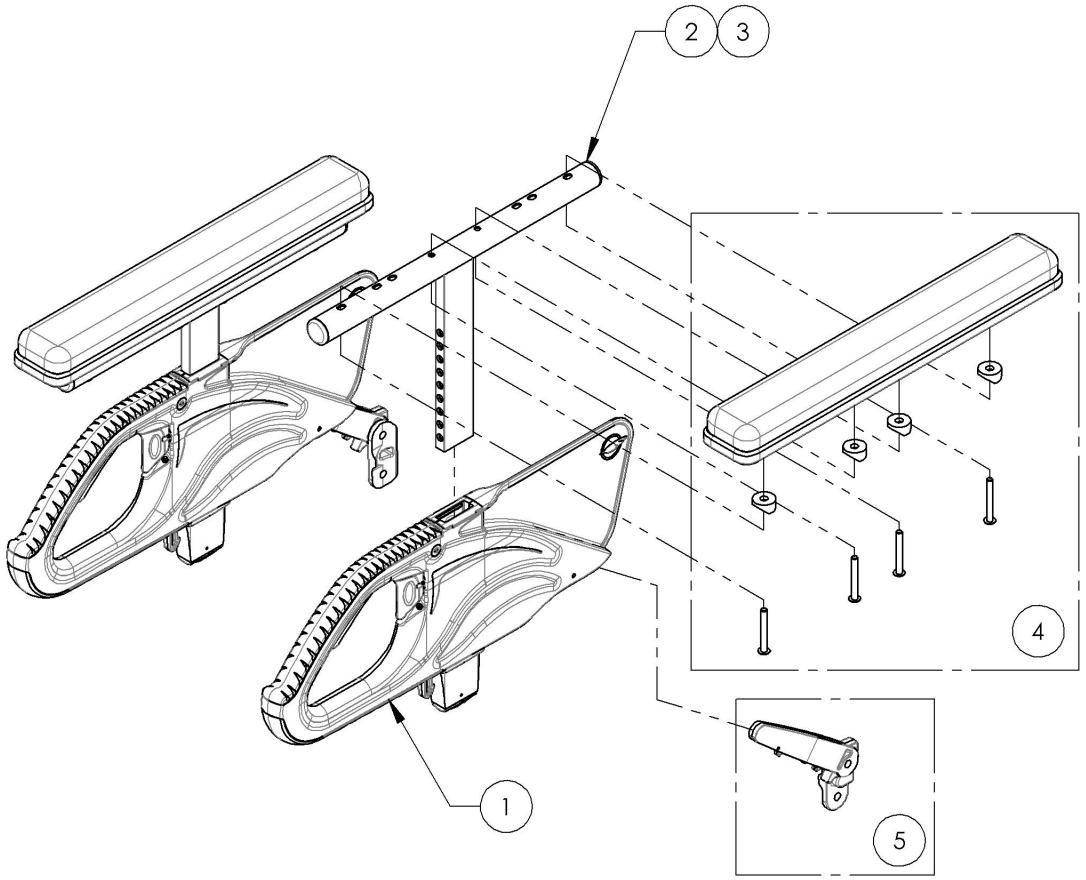

* DOUBLE TRIGGER INSTALLATION OPTIONS	
STANDARD RELEASE	LOCK POSITION
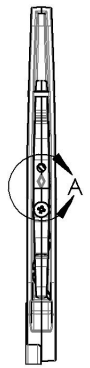	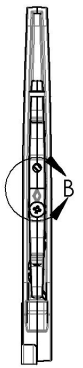
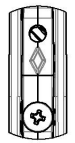 DETAIL A	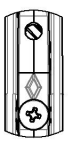 DETAIL B
NOTICE THE DIRECTION OF THE DIAMOND SHAPE ON THE TRIGGER, HIS DISTANCE FROM THE SCREW INDICATES THE CONFIGURATION USED	

9002941
Flip Back Type 2 Complete Armrest, 8-12 in, Gel Pad, Full Length (Pair)

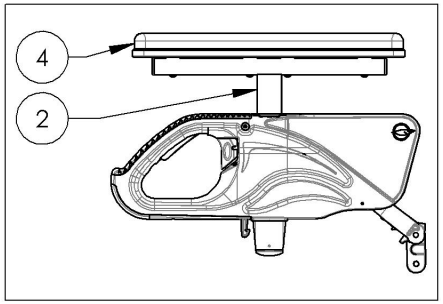

9002942
Flip Back Type 2 Complete Armrest, 10-14 in, Gel Pad, Full Length (Pair)

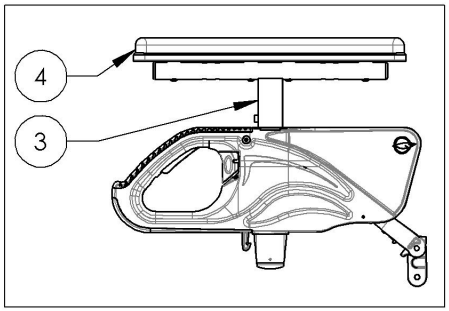

MAKE SURE TO HAVE YOUR SERIAL NUMBER NEARBY WHEN ORDERING PARTS FOR YOUR MOTION COMPOSITES WHEELCHAIR

OLD STEM BOLT DESIGN
(MUST BE VALIDATE WITH CUSTOMER SERVICE)

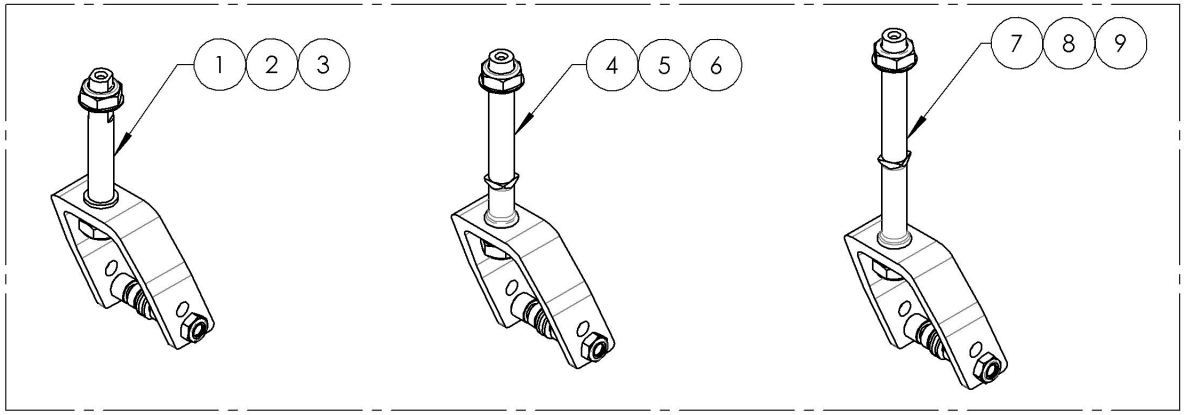

ITEM NO.	PARTNO	DESCRIPTION	QTY.
1	9002185	Fork - 4 in, STD Stem bolt + Hardware	1
2	9002186	Fork - 5 in, STD Stem bolt + Hardware	1
3	9002187	Fork - 7 in, STD Stem bolt + Hardware	1
4	9002188	Fork - 4 in, Stem bolt +1 in + Hardware	1
5	9002189	Fork - 5 in, Stem bolt +1 in + Hardware	1
6	9002190	Fork - 7 in, Stem bolt +1 in + Hardware	1
7	9002191	Fork - 4 in, Stem bolt +2 in + Hardware	1
8	9002192	Fork - 5 in, Stem bolt +2 in + Hardware	1
9	9002193	Fork - 7 in, Stem bolt +2 in + Hardware	1
10	9002900	Fork - 4 in, STD Stem Bolt, Anti-Flutter + Hardware	1
11	9002901	Fork - 5 in, STD Stem Bolt, Anti-Flutter + Hardware	1
12	9002902	Fork - 7 in, STD Stem Bolt, Anti-Flutter + Hardware	1
13	9002903	Fork - 4 in, Stem Bolt +1 in, Anti-Flutter + Hardware	1
14	9002904	Fork - 5 in, Stem Bolt +1 in, Anti-Flutter + Hardware	1
15	9002905	Fork - 7 in, Stem Bolt +1 in, Anti-Flutter + Hardware	1
16	9002906	Fork - 4 in, Stem Bolt +2 in, Anti-Flutter + Hardware	1
17	9002907	Fork - 5 in, Stem Bolt +2 in, Anti-Flutter + Hardware	1
18	9002908	Fork - 7 in, Stem Bolt +2 in, Anti-Flutter + Hardware	1

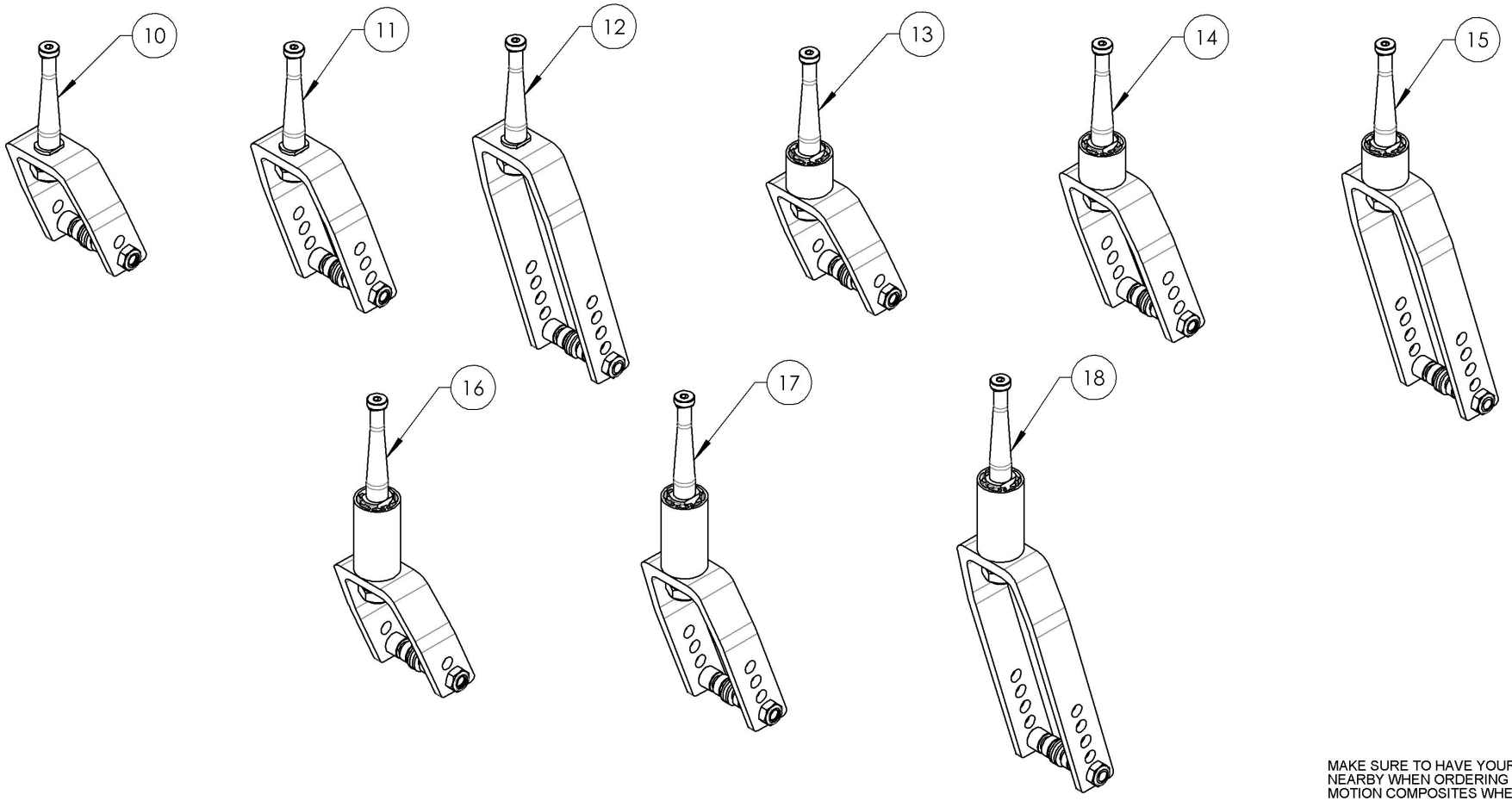

MAKE SURE TO HAVE YOUR SERIAL NUMBER NEARBY WHEN ORDERING PARTS FOR YOUR MOTION COMPOSITES WHEELCHAIR

9002185_9002193
Fork - Stem bolt + Hardware

ITEM NO.	PARTNO	DESCRIPTION	9002185 /QTY.	9002186 /QTY.	9002187 /QTY.	9002188 /QTY.	9002189 /QTY.	9002190 /QTY.	9002191 /QTY.	9002192 /QTY.	9002193 /QTY.
1	22106	FORK 4x2 in	1	-	-	1	-	-	1	-	-
2	22107	FORK 5x2 in	-	1	-	-	1	-	-	1	-
3	22109	FORK 7x2 in	-	-	1	-	-	1	-	-	1
4	22031	STEM BOLT STD	1	1	1	-	-	-	-	-	-
5	22032	STEM BOLT + 1	-	-	-	1	1	1	-	-	-
6	22033	STEM BOLT + 2	-	-	-	-	-	-	1	1	1
7	22029	CASTER SPACER LARGE	2	2	2	2	2	2	2	2	2
8	22028	CASTER SPACER SMALL	2	2	2	2	2	2	2	2	2
9	90990	M8 LOW NYLON LOCK	1	1	1	1	1	1	1	1	1
10	90992	M12 LOW NYLON LOCK	2	2	2	2	2	2	2	2	2
11	99590	WASHER 5/16 - 21/64 ID X 19/32 OD X .062THK	2	2	2	2	2	2	2	2	2
12	99595	WASHER 12mm ID X 22mm OD X 1mm THK	1	1	1	1	1	1	1	1	1
13	90685	BUTTON HEAD CAP SCREW M8X1.25 X 60mm LONG, 28mm THREADED + BLUE THREADLOCKER - BLACK ZINC	1	1	1	1	1	1	1	1	1

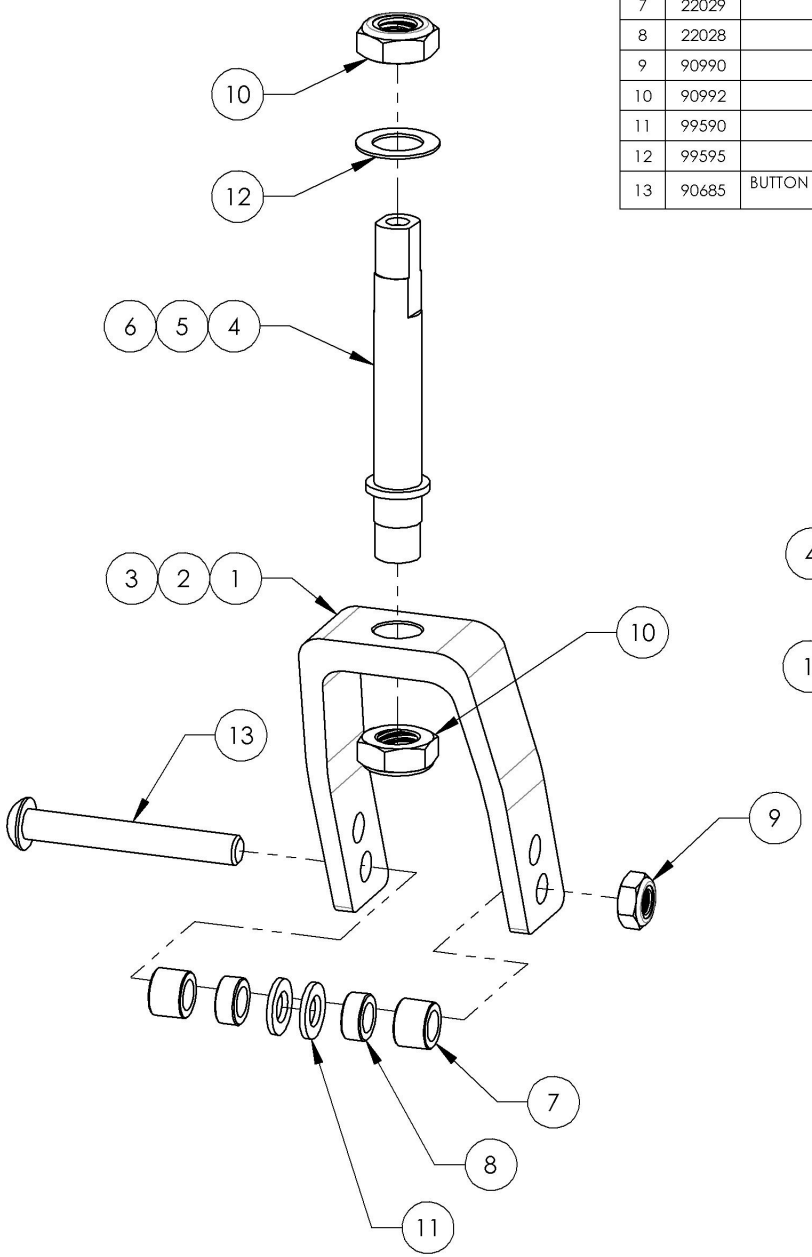

WITH 4" FORK AND STD STEM BOLT

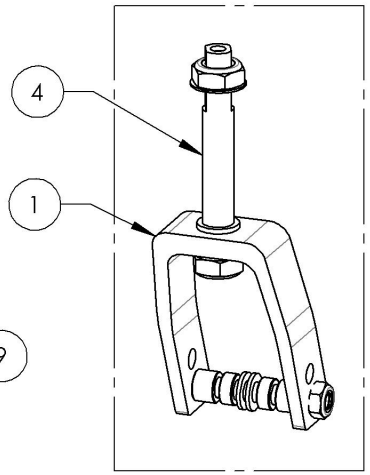

WITH 5" FORK AND +1" STEM BOLT

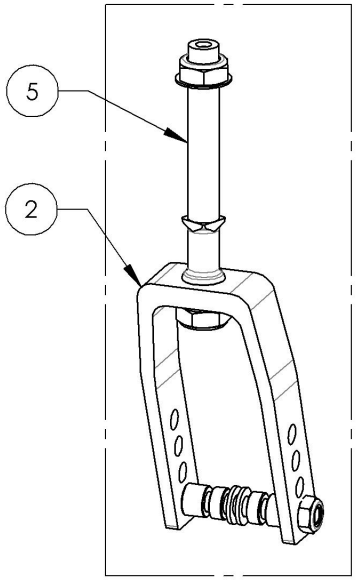

WITH 7" FORK AND +2" STEM BOLT

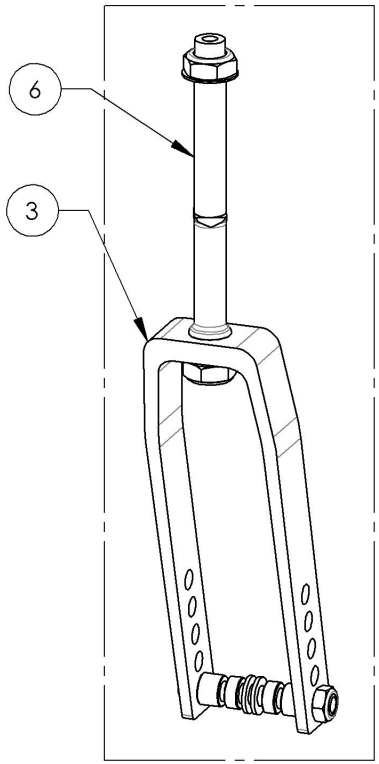

MAKE SURE TO HAVE YOUR SERIAL NUMBER NEARBY WHEN ORDERING PARTS FOR YOUR MOTION COMPOSITES WHEELCHAIR

9002900_9002908
Fork - Stem Bolt, Anti-Flutter + Hardware

APPLICABLE ON WHEELCHAIRS SINCE 2017/02/13

ITEM NO.	PARTNO	DESCRIPTION	9002900 /QTY.	9002901 /QTY.	9002902 /QTY.	9002903 /QTY.	9002904 /QTY.	9002905 /QTY.	9002906 /QTY.	9002907 /QTY.	9002908 /QTY.
1	22106	FORK 4x2 in	1	-	-	1	-	-	1	-	-
2	22107	FORK 5x2 in	-	1	-	-	1	-	-	1	-
3	22109	FORK 7x2 in	-	-	1	-	-	1	-	-	1
4	22090	STEM BOLT STD	1	1	1	-	-	-	-	-	-
5	22091	STEM BOLT + 1 in	-	-	-	1	1	1	-	-	-
6	22092	STEM BOLT + 2 in	-	-	-	-	-	-	1	1	1
7	22149	STEM BOLT COVER +1 in	-	-	-	1	1	1	-	-	-
8	22150	STEM BOLT COVER +2 in	-	-	-	-	-	-	1	1	1
9	22095	TRIPLE-WAVE STEEL WASHER 0.320in ID, 0.437in OD	1	1	1	1	1	1	1	1	1
10	91038	STEM BOLT TOP SCREW	1	1	1	1	1	1	1	1	1
11	90992	M12 LOW NYLON LOCK	1	1	1	1	1	1	1	1	1
12	90685	BUTTON HEAD CAP SCREW M8X1.25 X 60mm LONG, 28mm THREADED + BLUE THREADLOCKER - BLACK ZINC	1	1	1	1	1	1	1	1	1
13	90990	M8 LOW NYLON LOCK	1	1	1	1	1	1	1	1	1
14	99590	WASHER 5/16 - 21/64 ID X 19/32 OD X .062THK	2	2	2	2	2	2	2	2	2
15	22028	CASTER SPACER SMALL	2	2	2	2	2	2	2	2	2
16	22029	CASTER SPACER LARGE	2	2	2	2	2	2	2	2	2

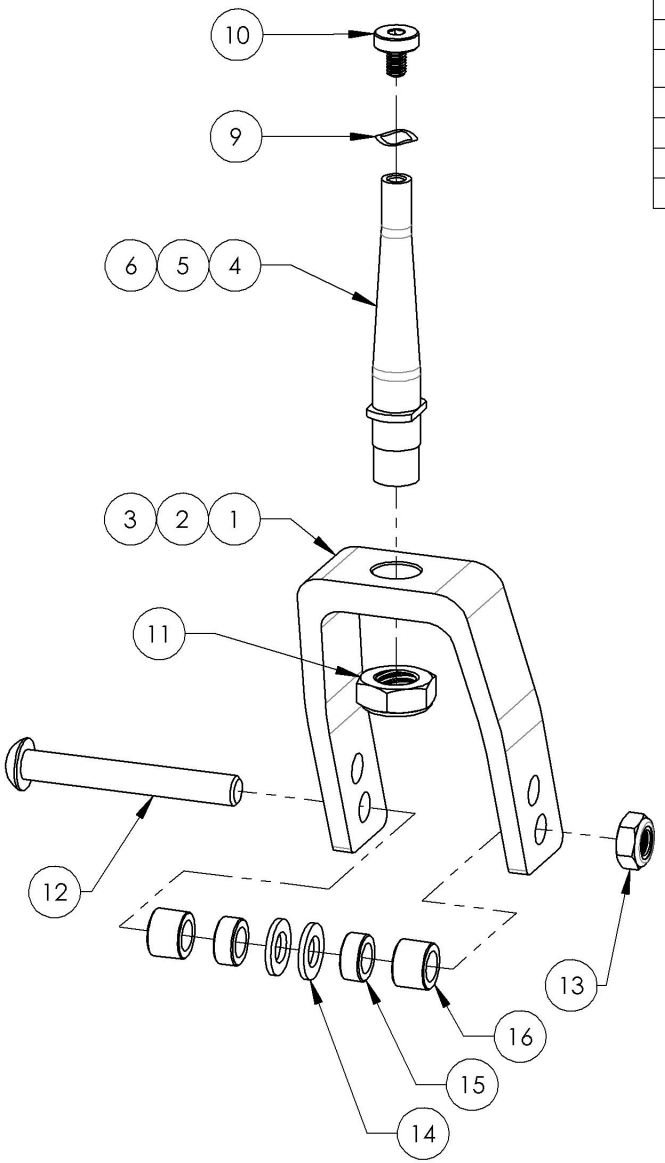

WITH 4" FORK AND STD STEM BOLT

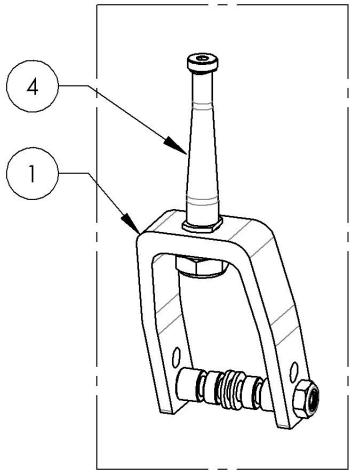

WITH 5" FORK AND +1" STEM BOLT

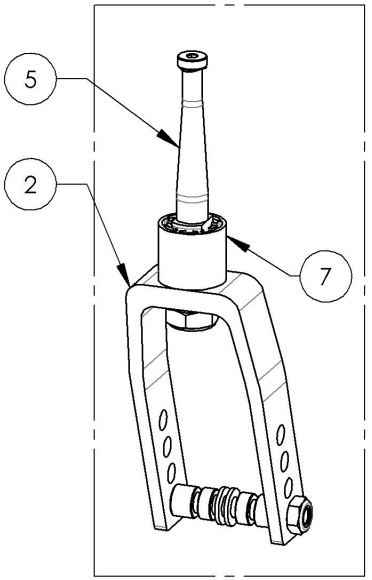

WITH 7" FORK AND +2" STEM BOLT

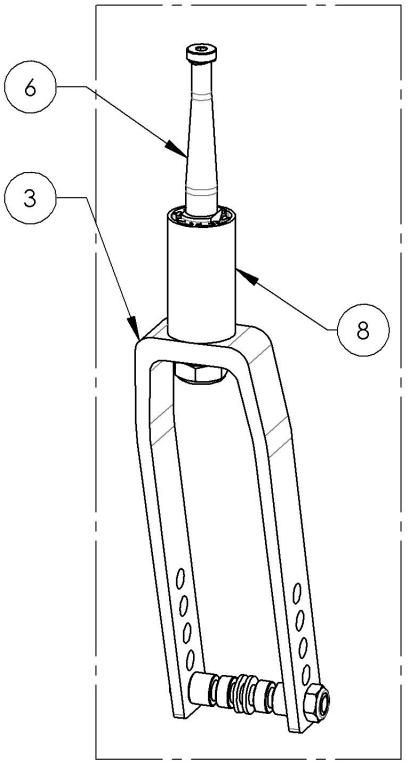

MAKE SURE TO HAVE YOUR SERIAL NUMBER NEARBY WHEN ORDERING PARTS FOR YOUR MOTION COMPOSITES WHEELCHAIR

Quick Order Catalogue
Stem Bolt Assembly

ITEM NO.	PARTNO	DESCRIPTION	QTY.
1	9002161	Stem Bolt Standard + Hardware	1
2	9002162	Stem Bolt +1 in + Hardware	1
3	9002163	Stem Bolt +2 in + Hardware	1
4	9002943	Stem Bolt Standard, Anti-Flutter + Hardware	1
5	9002944	Stem Bolt +1 in, Anti-Flutter + Hardware	1
6	9002945	Stem Bolt +2 in, Anti-Flutter + Hardware	1

DISCONTINUED

REPLACED BY #9002943 TO #9002945

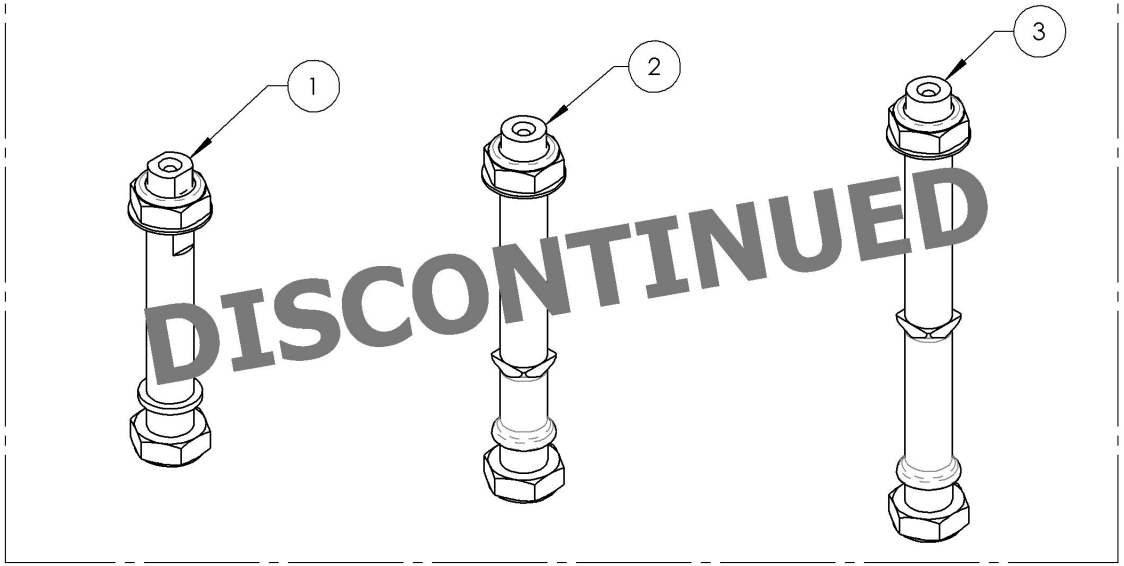

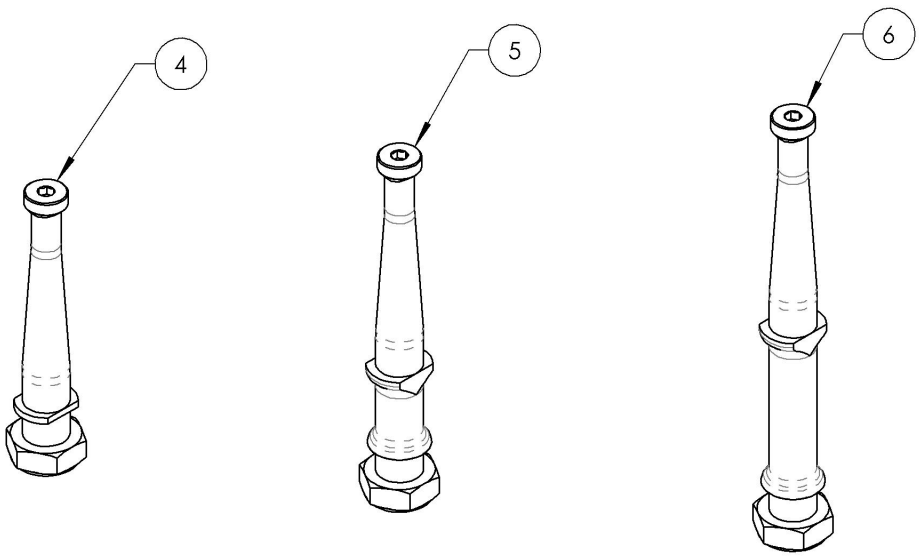

MAKE SURE TO HAVE YOUR SERIAL NUMBER NEARBY WHEN ORDERING PARTS FOR YOUR MOTION COMPOSITES WHEELCHAIR

9002161_9002163
Stem Bolt + Hardware

ITEM NO.	PARTNO	DESCRIPTION	9002161 /QTY.	9002162 /QTY.	9002163 /QTY.
1	22031	STEM BOLT STD	1	-	-
2	22032	STEM BOLT + 1	-	1	-
3	22033	STEM BOLT + 2	-	-	1
4	90992	M12 LOW NYLON LOCK	2	2	2
5	99595	WASHER 1_2, 17_32 ID X 7_8 OD X .032 THK	1	1	1

REPLACED BY #9002943

9002161
Stem Bolt Standard + Hardware

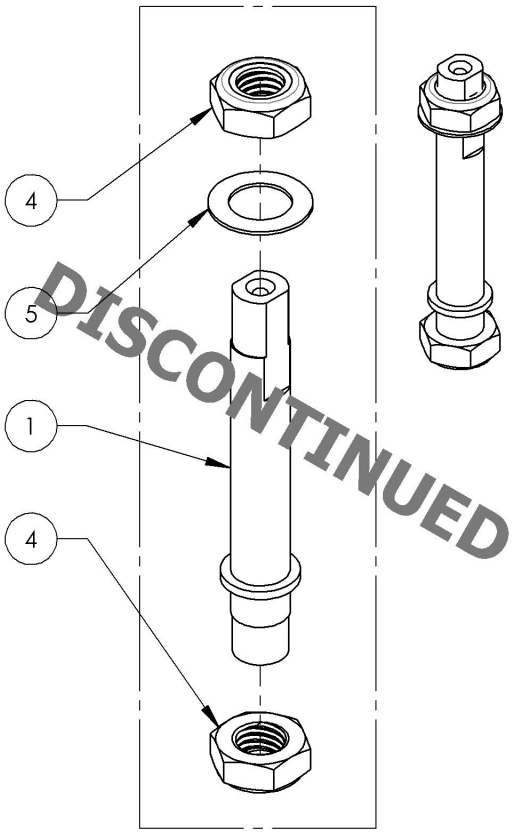

REPLACED BY #9002944

9002162
Stem Bolt +1 in + Hardware

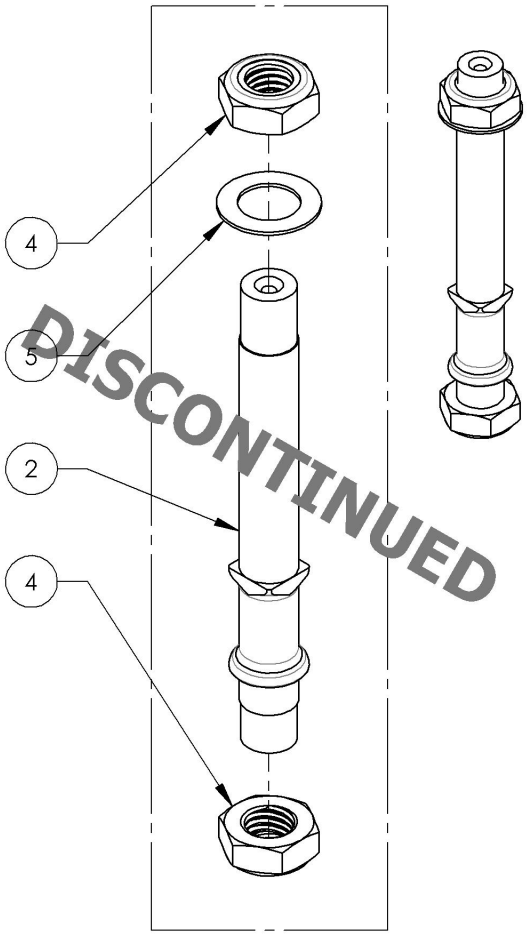

REPLACED BY #9002945

9002163
Stem Bolt +2 in + Hardware

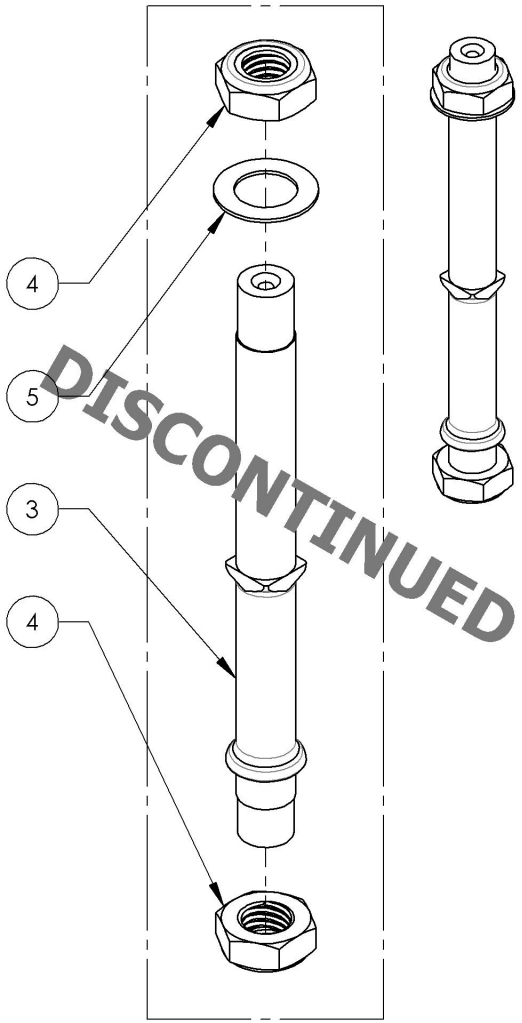

MAKE SURE TO HAVE YOUR SERIAL NUMBER NEARBY WHEN ORDERING PARTS FOR YOUR MOTION COMPOSITES WHEELCHAIR

9002943_9002945
Stem Bolt, Anti-Flutter + Hardware

ITEM NO.	PARTNO	DESCRIPTION	9002943 /QTY.	9002944 /QTY.	9002945 /QTY.
1	22090	STEM BOLT STD	1	-	-
2	22091	STEM BOLT + 1 in	-	1	-
3	22092	STEM BOLT + 2 in	-	-	1
4	22149	STEM BOLT COVER +1 in	-	1	-
5	22150	STEM BOLT COVER +2 in	-	-	1
6	22095	TRIPLE-WAVE STEEL WASHER 0.320in ID, 0.437in OD	1	1	1
7	91038	MACHINE SCREW M5X0.8 X 12mm	1	1	1
8	90992	M12 LOW NYLON LOCK	1	1	1

APPLICABLE ON WHEELCHAIRS SINCE 2017/02/13

APPLICABLE ON MOVE WHEELCHAIRS SINCE 2018/03/22

9002943
Stem Bolt Standard, Anti-Flutter + Hardware

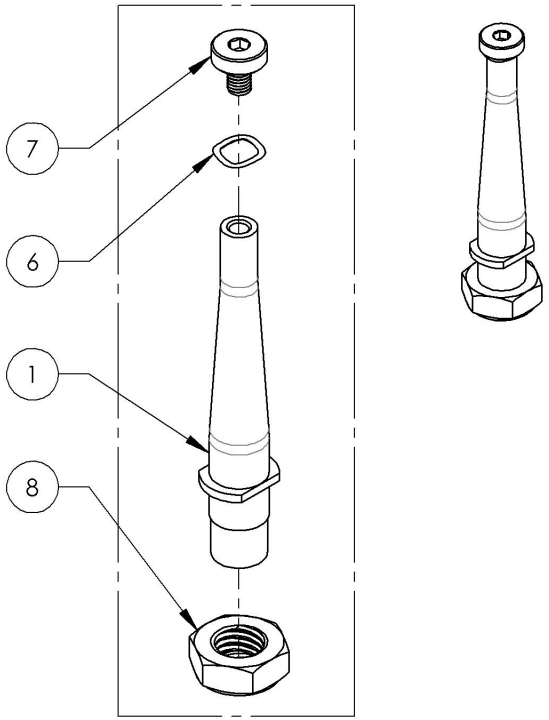

9002944
Stem Bolt +1 in, Anti-Flutter + Hardware

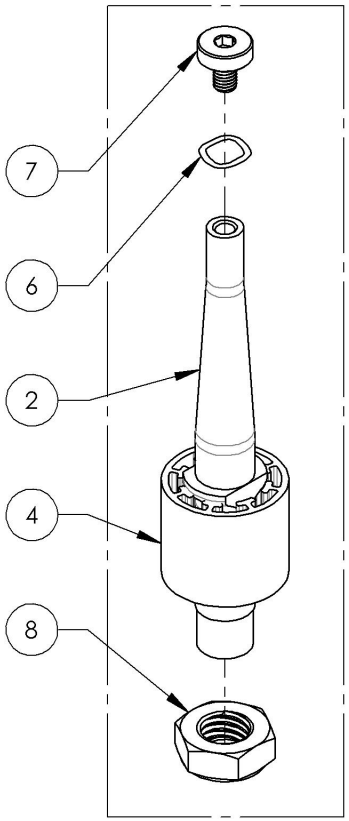

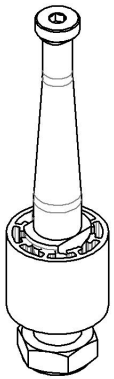

9002945
Stem Bolt +2 in, Anti-Flutter + Hardware

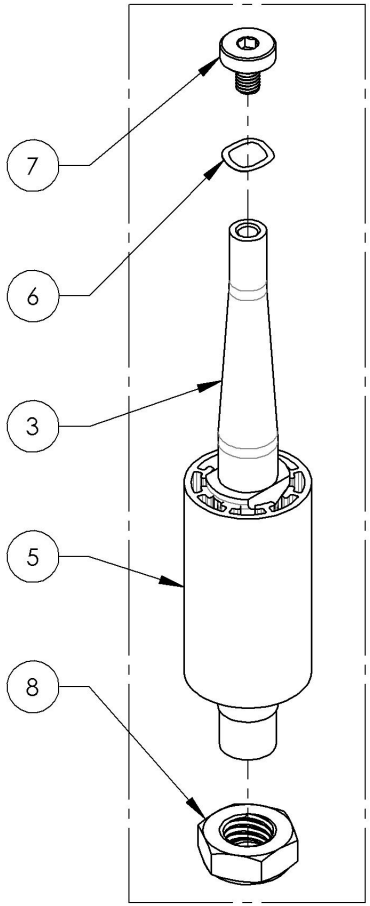

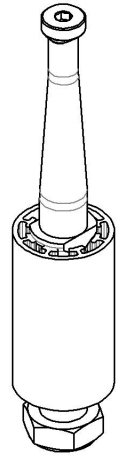

MAKE SURE TO HAVE YOUR SERIAL NUMBER NEARBY WHEN ORDERING PARTS FOR YOUR MOTION COMPOSITES WHEELCHAIR

Quick Order Catalogue
Caster Lock Pin Assembly

ITEM NO.	PARTNO	DESCRIPTION	QTY
1	9002918	Fork - 3 in, Wheelchair Transit Tie Down, With +1 in Caster Lock Pin	1
2	9002919	Fork - 4 in, Wheelchair Transit Tie Down, With +1 in Caster Lock Pin	1
3	9002920	Fork - 5 in, Wheelchair Transit Tie Down, With +1 in Caster Lock Pin	1
4	9002921	Fork - 7 in, Wheelchair Transit Tie Down, With +1 in Caster Lock Pin	1
5	9002922	Fork - 3 in, Wheelchair Transit Tie Down, With +2 in Caster Lock Pin	1
6	9002923	Fork - 4 in, Wheelchair Transit Tie Down, With +2 in Caster Lock Pin	1
7	9002924	Fork - 5 in, Wheelchair Transit Tie Down, With +2 in Caster Lock Pin	1
8	9002925	Fork - 7 in, Wheelchair Transit Tie Down, With +2 in Caster Lock Pin	1

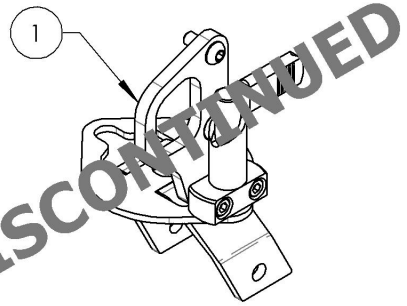

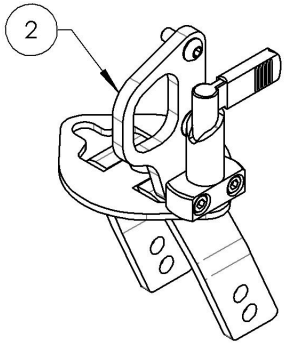

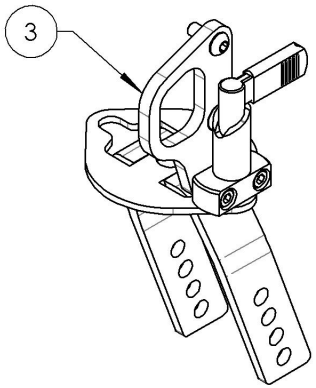

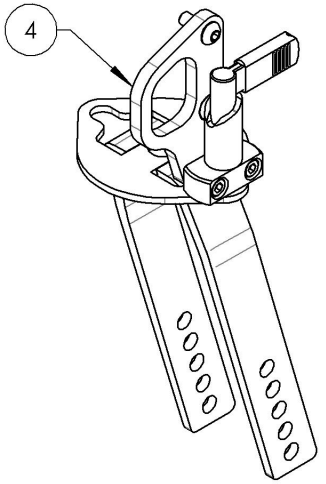

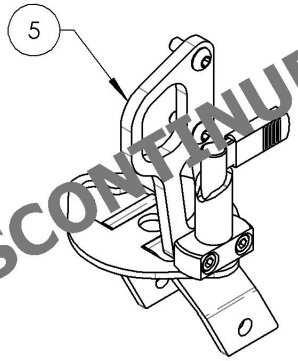

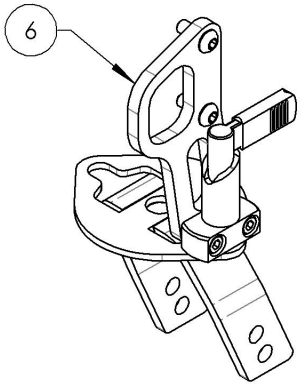

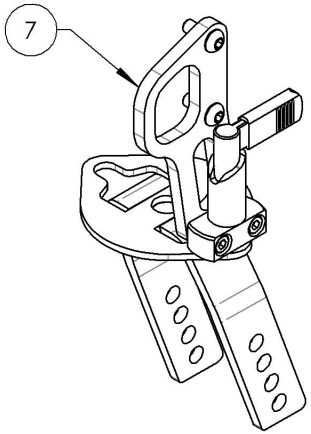

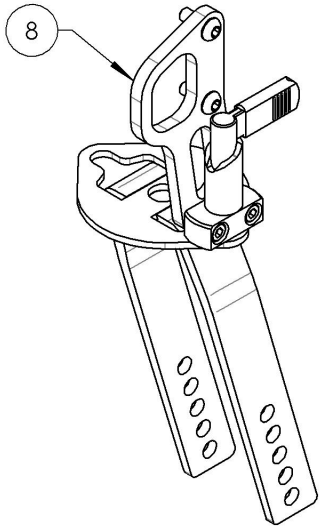

DISCONTINUED
DISCONTINUED

MAKE SURE TO HAVE YOUR SERIAL NUMBER NEARBY WHEN ORDERING PARTS FOR YOUR MOTION COMPOSITES WHEELCHAIR

9002918_9002925
Fork - Wheelchair Transit Tie Down, With Caster Lock Pin

ITEM NO.	PARTNO	DESCRIPTION	9002918 /QTY.*	9002919 /QTY.	9002920 /QTY.	9002921 /QTY.	9002922 /QTY.*	9002923 /QTY.	9002924 /QTY.	9002925 /QTY.
1	22061	FRONT TIE DOWN +1 FOR CASTER LOCK PIN	1	1	1	1	-	-	-	-
2	22062	FRONT TIE DOWN +2 FOR CASTER LOCK PIN	-	-	-	-	1	1	1	1
3	22063	SLIDER LOCK FOR CASTER LOCK PIN	1	1	1	1	1	1	1	1
4	22060	CASTER LOCK PIN PLATE	1	1	1	1	1	1	1	1
5	22067	3"x1½" MACHINED FORK FOR CASTER LOCK PIN	1	-	-	-	1	-	-	-
6	22064	4"x2" MACHINED FORK FOR CASTER LOCK PIN	-	1	-	-	-	1	-	-
7	22065	5"x2" MACHINED FORK FOR CASTER LOCK PIN	-	-	1	-	-	-	1	-
8	22066	7"x2" MACHINED FORK FOR CASTER LOCK PIN	-	-	-	1	-	-	-	1
9	90659	BUTTON HEAD CAP SCREW M6X1 X 16mm LONG, FULLY THREADED + BLUE THREADLOCKER - BLACK ZINC	1	1	1	1	2	2	2	2
10	90864	FLAT HEAD CAP SCREW M6X1 X 12mm LONG, FULLY THREADED + BLUE LOCTITE	1	1	1	1	-	-	-	-
11	90748	SOCKET CAP SCREW M5X0.8 X 18mm LONG, FULLY THREADED + BLUE TREADLOCKER - BLACK ZINC	2	2	2	2	2	2	2	2

***9002918 and 9002922 are discontinued**

Front Wheelchair Transit Tie Down With Fork & +1" Castor Lock Pin

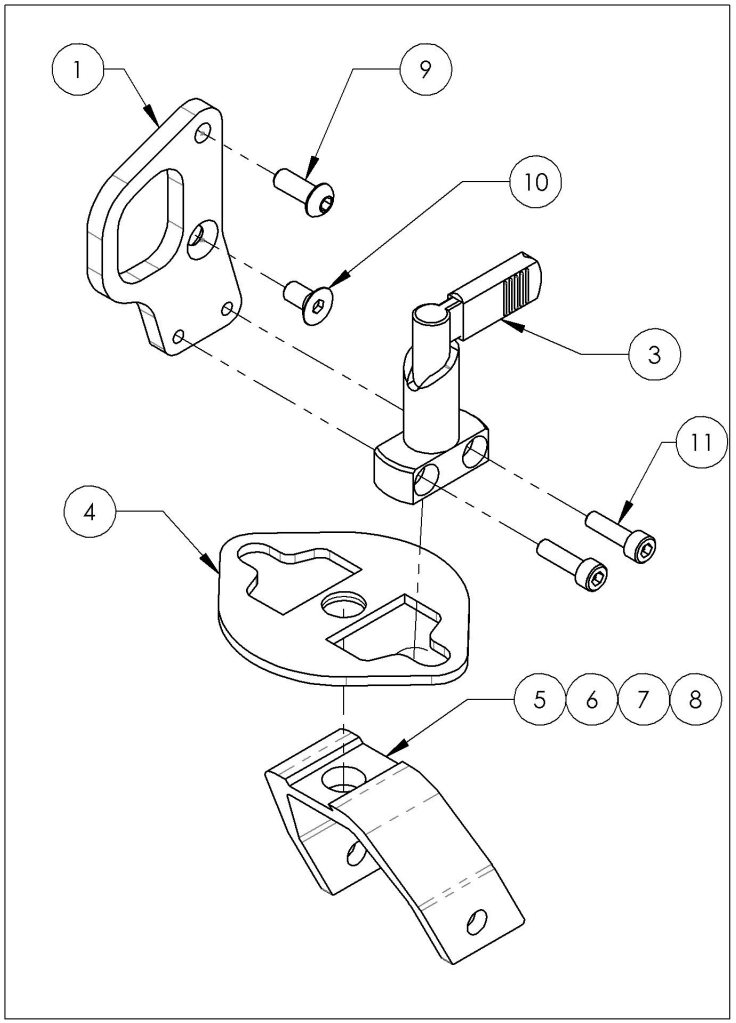

Front Wheelchair Transit Tie Down With Fork & +2" Castor Lock Pin

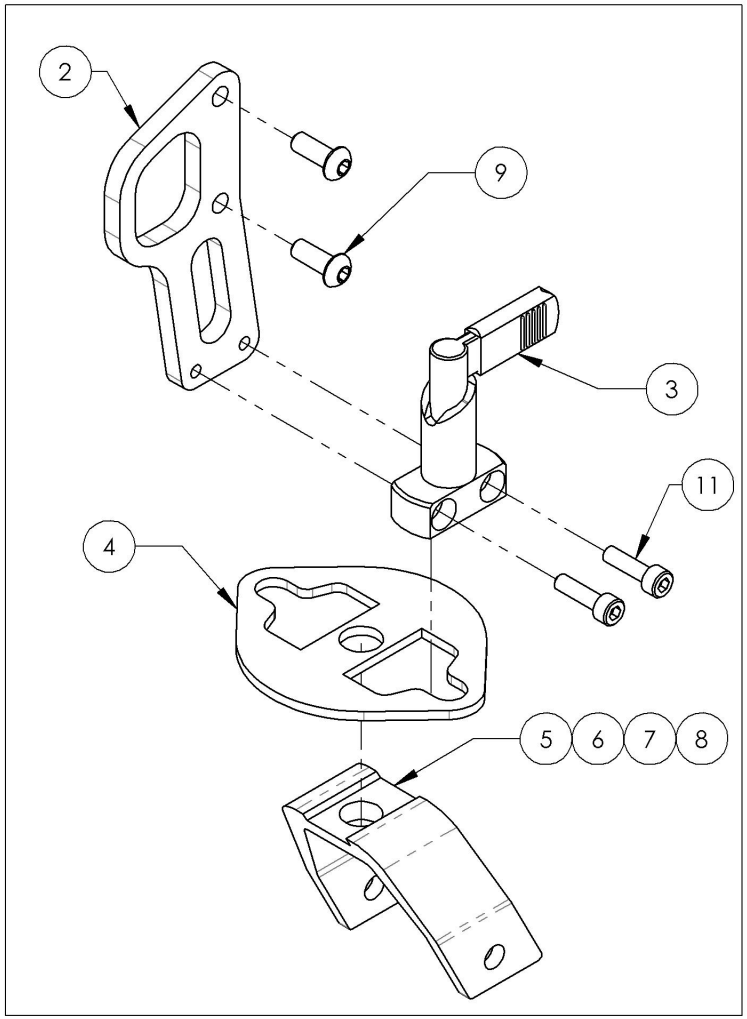

MAKE SURE TO HAVE YOUR SERIAL NUMBER NEARBY WHEN ORDERING PARTS FOR YOUR MOTION COMPOSITES WHEELCHAIR

Quick Order Catalogue
Link & Hardware

ITEM NO.	PARTNO	DESCRIPTION	QTY.
1	9002150	Link - 12 in + Hardware	1
2	9002151	Link - 13 in + Hardware	1
3	9002152	Link - 14 in + Hardware	1
4	9002153	Link - 15 in + Hardware	1
5	9002154	Link - 16 in + Hardware	1
6	9002155	Link - 17 in + Hardware	1
7	9002156	Link - 18 in + Hardware	1
8	9002157	Link - 19 in + Hardware	1
9	9002158	Link - 20 in + Hardware	1
10	9002159	Link - 21 in + Hardware	1
11	9002160	Link - 22 in + Hardware	1

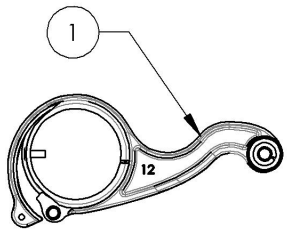

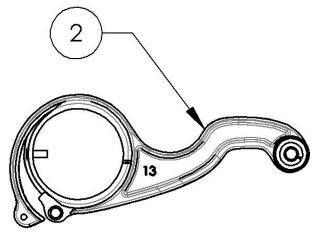

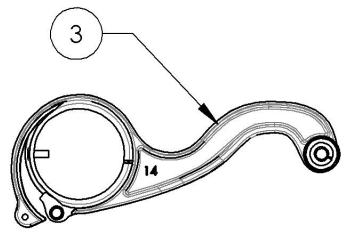

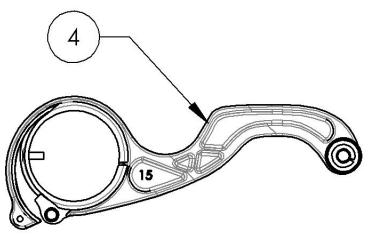

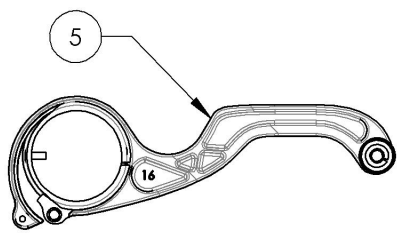

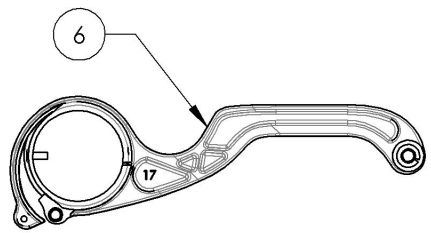

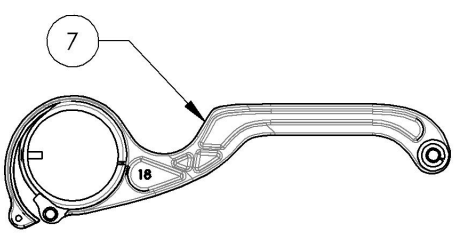

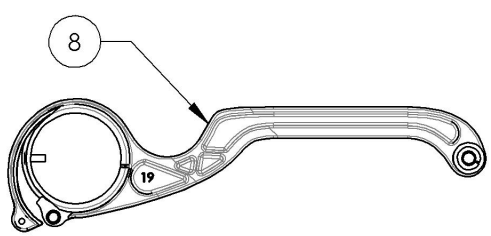

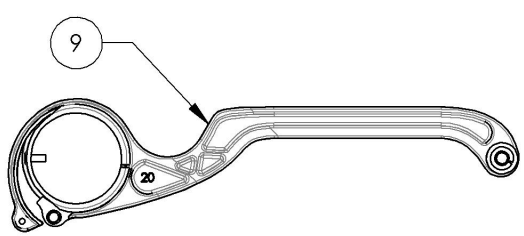

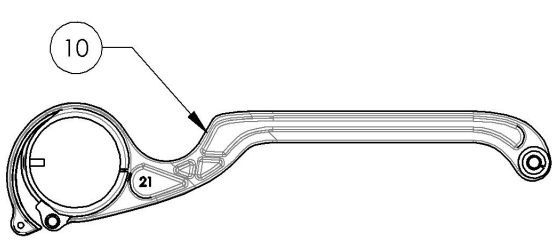

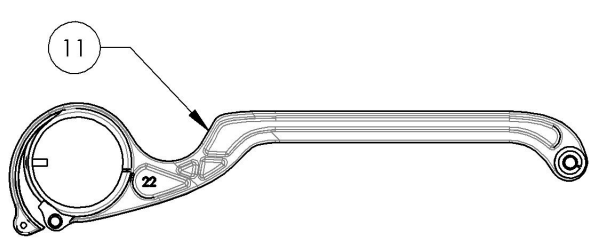

MAKE SURE TO HAVE YOUR SERIAL NUMBER NEARBY WHEN ORDERING PARTS FOR YOUR MOTION COMPOSITES WHEELCHAIR

9002150_9002160
Link + Hardware

ITEM NO.	PARTNO	DESCRIPTION	9002150 /QTY.	9002151 /QTY.	9002152 /QTY.	9002153 /QTY.	9002154 /QTY.	9002155 /QTY.	9002156 /QTY.	9002157 /QTY.	9002158 /QTY.	9002159 /QTY.	9002160 /QTY.
1	12140	LINK GUIDE	1	1	1	1	1	1	1	1	1	1	1
2	91009	FLANGE BUTTON HEAD CAP SCREW, M5X.8 X 8mm	1	1	1	1	1	1	1	1	1	1	1
3	99000	SCREW PHILLIPS PAN HD #6-32 X 1/2	1	1	1	1	1	1	1	1	1	1	1
4	22028	CASTER SPACER SMALL	1	1	1	1	1	-	-	-	-	-	-
5	12152	12in A7_C2 LINK	1	-	-	-	-	-	-	-	-	-	-
6	12153	13in A7_C2 LINK	-	1	-	-	-	-	-	-	-	-	-
7	12154	14in A7_C2 LINK	-	-	1	-	-	-	-	-	-	-	-
8	12155	15in A7_C2 LINK	-	-	-	1	-	-	-	-	-	-	-
9	12156	16in A7_C2 LINK	-	-	-	-	1	-	-	-	-	-	-
10	12157	17in A7_C2 LINK	-	-	-	-	-	1	-	-	-	-	-
11	12158	18in A7_C2 LINK	-	-	-	-	-	-	1	-	-	-	-
12	12159	19in A7_C2 LINK	-	-	-	-	-	-	-	1	-	-	-
13	12160	20in A7_C2 LINK	-	-	-	-	-	-	-	-	1	-	-
14	12161	21in A7_C2 LINK	-	-	-	-	-	-	-	-	-	1	-
15	12162	22in A7_C2 LINK	-	-	-	-	-	-	-	-	-	-	1
16	99660	POP RIVET 3_32 D X .365 L X .126_.250	1	1	1	1	1	1	1	1	1	1	1
17	99605	SPACER M5 BOLT, 16MM LG, 0.7MM WALL THK	1	1	1	1	1	-	-	-	-	-	-
18	99600	SPACER M5 BOLT, 10MM LG, 0.7MM WALL THK	-	-	-	-	-	1	1	1	1	1	1
19	99598	LOCKWASHER #10 (.062 WIDE X .047 THK)	1	1	1	1	1	1	1	1	1	1	1
20	99550	WASHER #10 .200 ID X 7_16 OD X .037 THK - BLACK ZINC	2	2	2	2	2	2	2	2	2	2	2
21	90651	BUTTON HEAD CAP SCREW M5X0.8 X 30mm LONG, FULLY THREADED	1	1	1	1	1	1	1	1	1	1	1

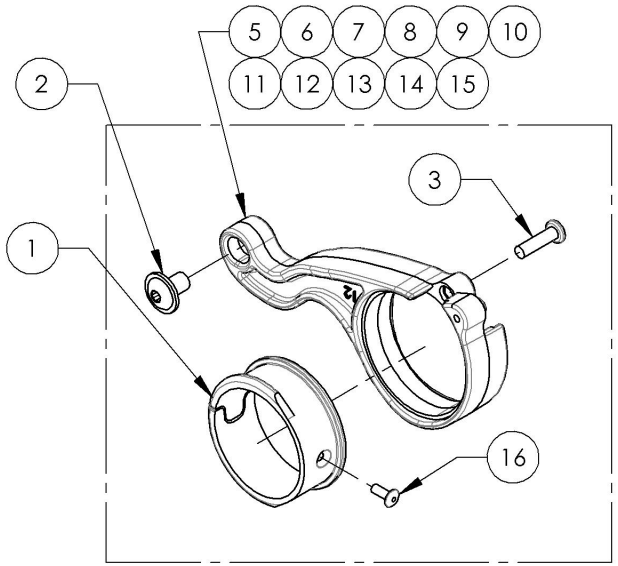

ACTUAL ASSEMBLY

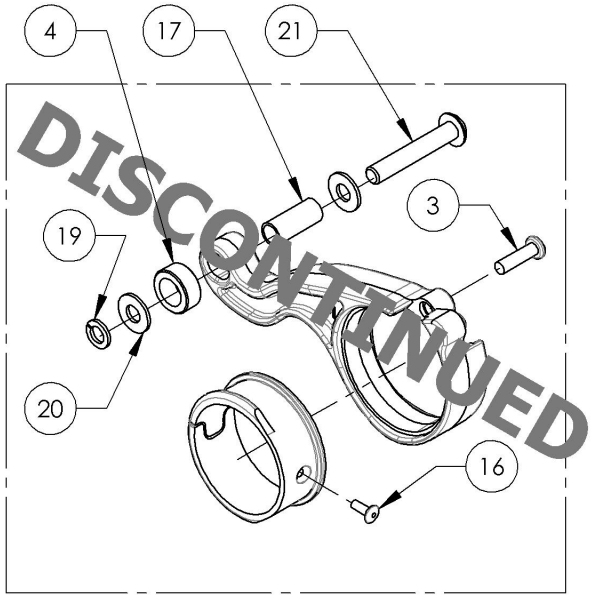

PREVIOUS ASSEMBLY (12" TO 16")

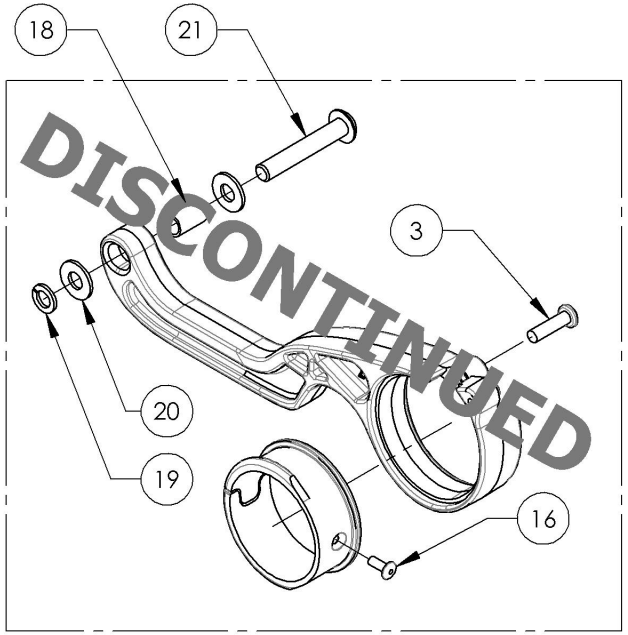

PREVIOUS ASSEMBLY (17" TO 22")

MAKE SURE TO HAVE YOUR SERIAL NUMBER NEARBY WHEN ORDERING PARTS FOR YOUR MOTION COMPOSITES WHEELCHAIR

Quick Order Catalogue
Rear Bushing Assembly

ITEM NO.	PARTNO	DESCRIPTION	QTY.
1	9002441	Rear Wheel - 0° Axle Bushing V2B + Hardware	1
2	9002442	Rear Wheel - 3° Axle Bushing V2B + Hardware	1
3	9002443	Rear Wheel - 6° Axle Bushing V2B + Hardware	1

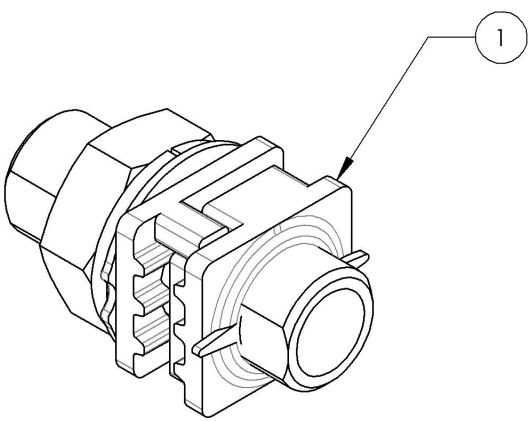

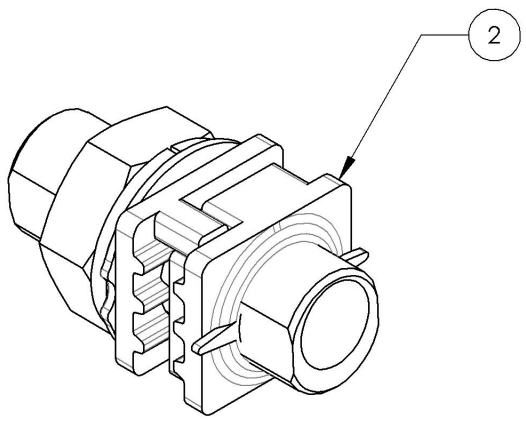

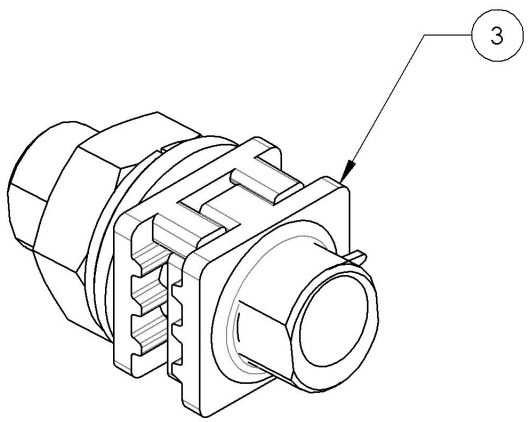

MAKE SURE TO HAVE YOUR SERIAL NUMBER NEARBY WHEN ORDERING PARTS FOR YOUR MOTION COMPOSITES WHEELCHAIR

9002441_9002443
Rear Wheel - Axle Bushing V2B + Hardware

ITEM NO.	PARTNO	DESCRIPTION	9002441 /QTY.	9002442 /QTY.	9002143 /QTY.
1	21514	V2B 0° POSITIONNING NUT AND FACE PLATE ASSEMBLY	1	1	-
2	21513	V2B 3° POSITIONNING NUT AND FACE PLATE ASSEMBLY	-	-	1
3	21041	0° BUSHING M18x1	1	-	-
4	21042	3° BUSHING M18x1	-	1	1
5	91031	JAM NUT M18 x 1.0	1	1	1
6	99597	LOCK WASHER M18	1	1	1

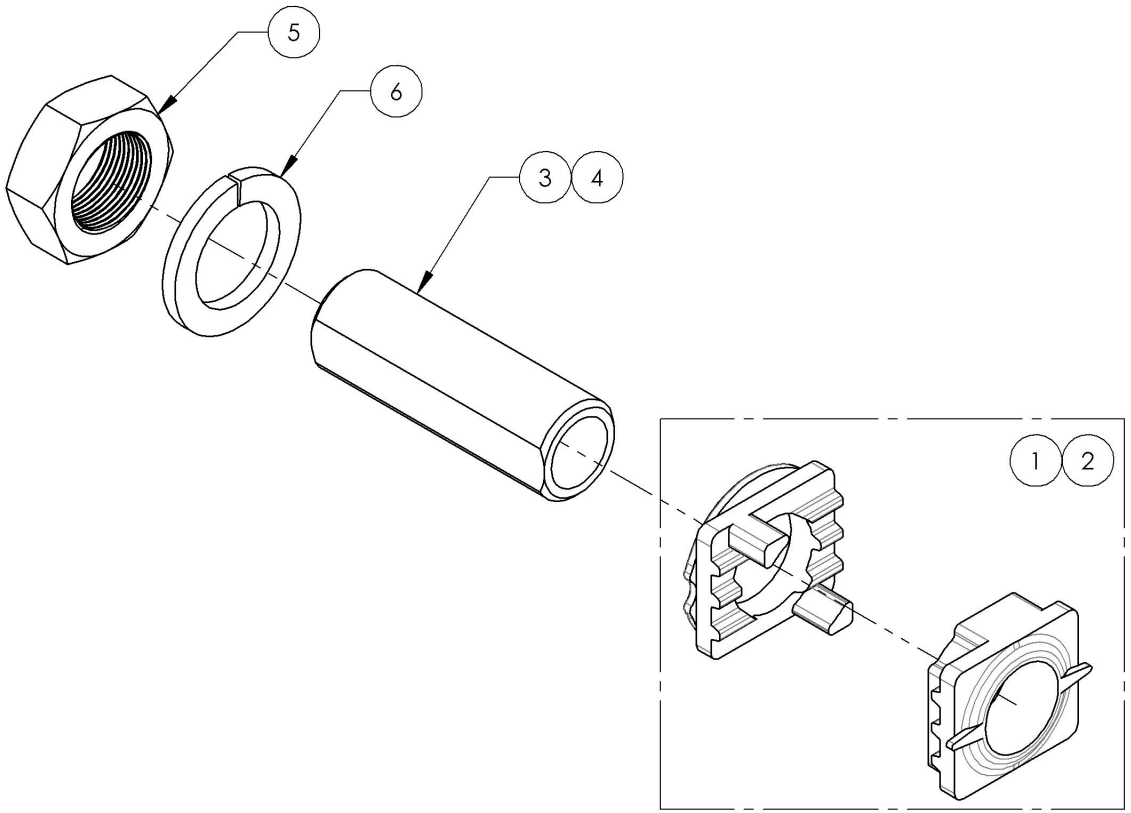

9002441
Rear Wheel - 0° Axle Bushing V2B + Hardware

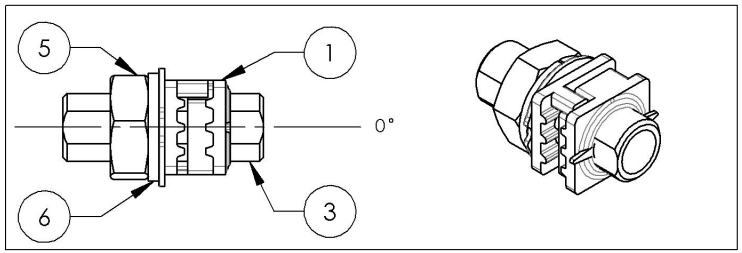

9002442
Rear Wheel - 3° Axle Bushing V2B + Hardware

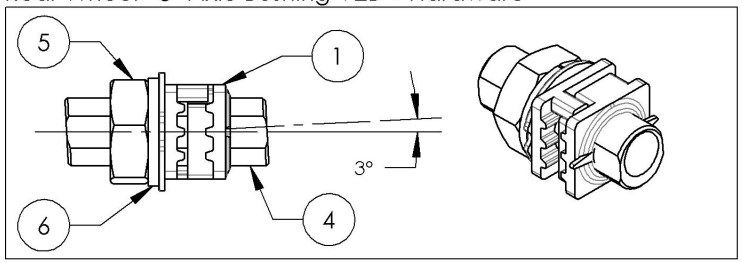

9002443
Rear Wheel - 6° Axle Bushing V2B + Hardware

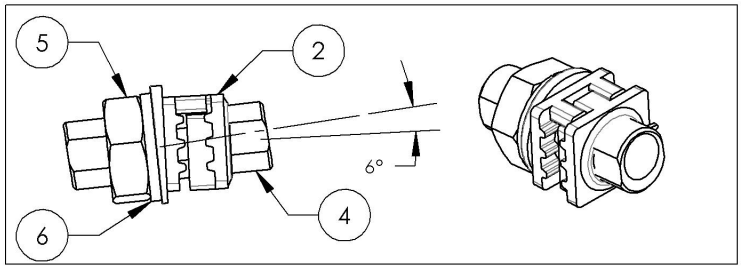

MAKE SURE TO HAVE YOUR SERIAL NUMBER NEARBY WHEN ORDERING PARTS FOR YOUR MOTION COMPOSITES WHEELCHAIR

Quick Order Catalogue
Rear Wheel Assembly

ITEM NO.	PARTNO	DESCRIPTION	QTY.
1	9002169	Rear Wheel - Mag + Soft Urethane Tire + Aluminium Handrim, 20 in	1
2	9002170	Rear Wheel - Mag + Soft Urethane Tire + Plastic Coated Handrim, 20 in	1
3	9002171	Rear Wheel - Mag + Soft Urethane Tire + Aluminium Handrim, 22 in	1
4	9002172	Rear Wheel - Mag + Soft Urethane Tire + Plastic Coated Handrim, 22 in	1
5	9002173	Rear Wheel - Mag + Soft Urethane Tire + Aluminium Handrim, 24 in	1
6	9002174	Rear Wheel - Mag + Soft Urethane Tire + Plastic Coated Handrim, 24 in	1
7	9002148	Rear Wheel - Newton One + Soft Urethane Tire + Aluminium Handrim, 20 in	1
8	9002149	Rear Wheel - Newton One + Soft Urethane Tire + Plastic Coated Handrim, 20 in	1
9	9002175	Rear Wheel - Newton One + Soft Urethane Tire + Aluminium Handrim, 22 in	1
10	9002176	Rear Wheel - Newton One + Soft Urethane Tire + Plastic Coated Handrim, 22 in	1
11	9002177	Rear Wheel - Newton One + Soft Urethane Tire + Aluminium Handrim, 24 in	1
12	9002178	Rear Wheel - Newton One + Soft Urethane Tire + Plastic Coated Handrim, 24 in	1
13	9002179	Rear Wheel - Newton Gravity + Soft Urethane Tire + Aluminium Handrim, 20 in	1
14	9002180	Rear Wheel - Newton Gravity + Soft Urethane Tire + Plastic Coated Handrim, 20 in	1
15	9002181	Rear Wheel - Newton Gravity + Soft Urethane Tire + Aluminium Handrim, 22 in	1
16	9002182	Rear Wheel - Newton Gravity + Soft Urethane Tire + Plastic Coated Handrim, 22 in	1
17	9002183	Rear Wheel - Newton Gravity + Soft Urethane Tire + Aluminium Handrim, 24 in	1
18	9002184	Rear Wheel - Newton Gravity + Soft Urethane Tire + Plastic Coated Handrim, 24 in	1

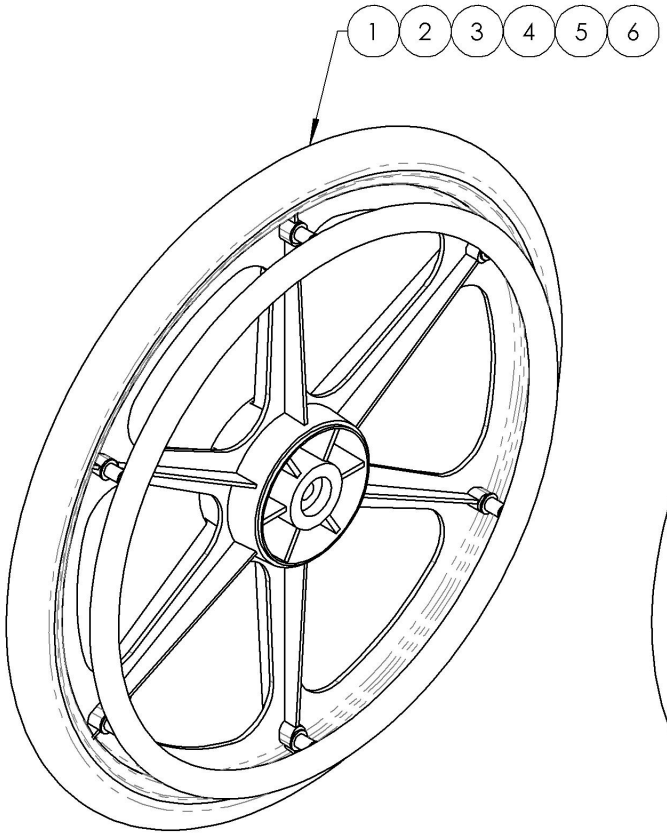

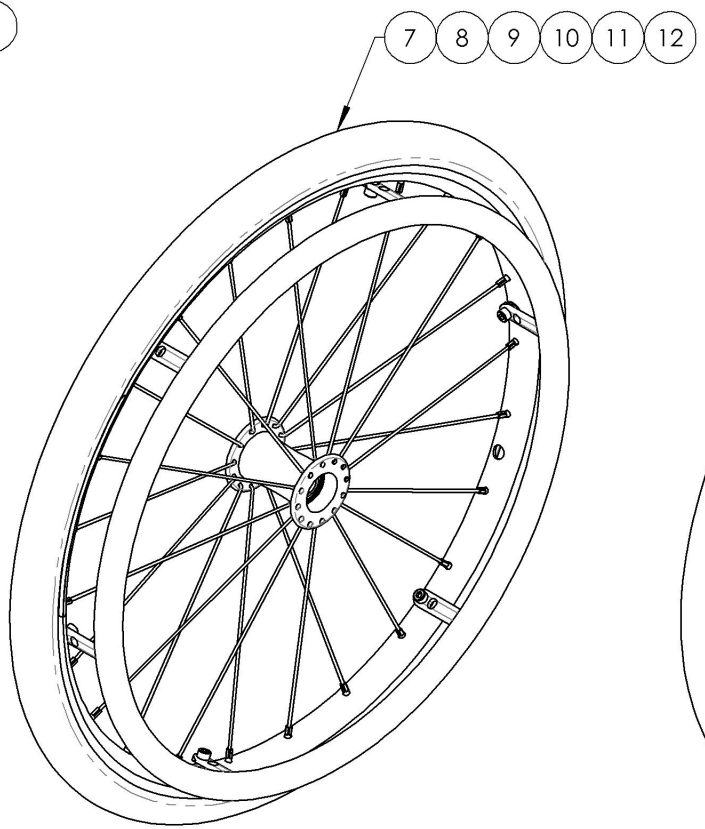

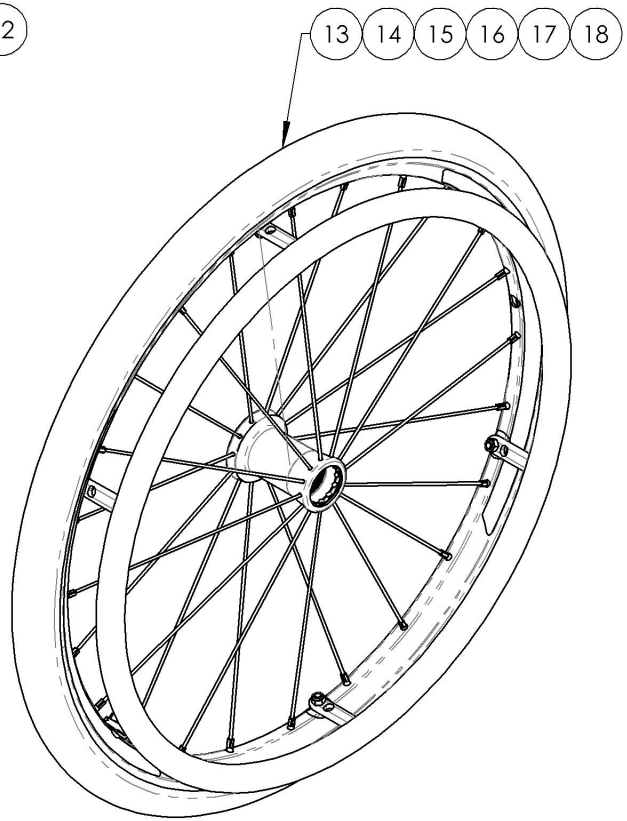

MAKE SURE TO HAVE YOUR SERIAL NUMBER NEARBY WHEN ORDERING PARTS FOR YOUR MOTION COMPOSITES WHEELCHAIR

9002148_9002149 & 9002169_9002184
Rear Wheel Assembly

ITEM NO.	PARTNO	DESCRIPTION	9002169 /QTY.	9002170 /QTY.	9002171 /QTY.	9002172 /QTY.	9002173 /QTY.	9002174 /QTY.	9002148 /QTY.	9002149 /QTY.	9002175 /QTY.	9002176 /QTY.	9002177 /QTY.	9002178 /QTY.	9002179 /QTY.	9002180 /QTY.	9002181 /QTY.	9002182 /QTY.	9002183 /QTY.	9002184 /QTY.
1	21105	20" MAG WHEEL	1	1	-	-	-	-	-	-	-	-	-	-	-	-	-	-	-	-
2	21106	22" MAG WHEEL	-	-	1	1	-	-	-	-	-	-	-	-	-	-	-	-	-	-
3	21107	24" MAG WHEEL	-	-	-	-	1	1	-	-	-	-	-	-	-	-	-	-	-	-
4	21118	20 in NEWTON ONE WHEEL	-	-	-	-	-	-	1	1	-	-	-	-	-	-	-	-	-	-
5	21110	22 in NEWTON ONE WHEEL	-	-	-	-	-	-	-	-	1	1	-	-	-	-	-	-	-	-
6	21111	24 in NEWTON ONE WHEEL	-	-	-	-	-	-	-	-	-	-	1	1	-	-	-	-	-	-
7	21113	20" NEWTON GRAVITY WHEEL	-	-	-	-	-	-	-	-	-	-	-	-	1	1	-	-	-	-
8	21114	22" NEWTON GRAVITY WHEEL	-	-	-	-	-	-	-	-	-	-	-	-	-	-	1	1	-	-
9	21115	24" NEWTON GRAVITY WHEEL	-	-	-	-	-	-	-	-	-	-	-	-	-	-	-	-	1	1
10	21365	SOFT URETHANE TIRE 20 x 1¼in	1	1	-	-	-	-	1	1	-	-	-	-	1	1	-	-	-	-
11	21366	SOFT URETHANE TIRE 22 x 1¼in	-	-	1	1	-	-	-	-	1	1	-	-	-	-	1	1	-	-
12	21367	SOFT URETHANE TIRE 24 x 1¼in	-	-	-	-	1	1	-	-	-	-	1	1	-	-	-	-	1	1
13	21236	20" ALUMINUM ANODIZED HANDRIM- MAG WHEEL	1	-	-	-	-	-	-	-	-	-	-	-	-	-	-	-	-	-
14	21205	22" ALUMINUM ANODIZED HANDRIM- MAG WHEEL	-	-	1	-	-	-	-	-	-	-	-	-	-	-	-	-	-	-
15	21206	24" ALUMINUM ANODIZED HANDRIM- MAG WHEEL	-	-	-	-	1	-	-	-	-	-	-	-	-	-	-	-	-	-
16	21237	20IN PLASTIC COATED HANDRIM - MAG WHEEL	-	1	-	-	-	-	-	-	-	-	-	-	-	-	-	-	-	-
17	21207	22 IN PLASTIC COATED HANDRIM - MAG WHEEL	-	-	-	1	-	-	-	-	-	-	-	-	-	-	-	-	-	-
18	21208	24 IN PLASTIC COATED HANDRIM - MAG WHEEL	-	-	-	-	-	1	-	-	-	-	-	-	-	-	-	-	-	-
19	21200	20in ALUMINUM ANODIZED HANDRIM	-	-	-	-	-	-	1	-	-	-	-	-	1	-	-	-	-	-
20	21201	22in ALUMINUM ANODIZED HANDRIM	-	-	-	-	-	-	-	-	1	-	-	-	-	-	1	-	-	-
21	21202	24in ALUMINUM ANODIZED HANDRIM	-	-	-	-	-	-	-	-	-	-	1	-	-	-	-	-	1	-
22	21210	20 in PLASTIC COATED HANDRIM	-	-	-	-	-	-	-	1	-	-	-	-	-	1	-	-	-	-
23	21211	22 in PLASTIC COATED HANDRIM	-	-	-	-	-	-	-	-	-	1	-	-	-	-	-	1	-	-
24	21212	24 in PLASTIC COATED HANDRIM	-	-	-	-	-	-	-	-	-	-	-	1	-	-	-	-	-	1
25	99601	SPACER HANDRIM MAG (last: 200 + 200 comm)	6	6	4	4	4	4	-	-	-	-	-	-	-	-	-	-	-	-
26	99013	SCREW PHILLIPS PAN HD #10_32 X 1_1_2 + BLUE THREADLOCKER	6	6	-	-	-	-	-	-	-	-	-	-	-	-	-	-	-	-
27	99564	FLAT WASHER M5 POUR HANDRIM MAG	12	12	8	8	8	8	-	-	-	-	-	-	-	-	-	-	-	-
28	90989	M5 LOW NYLON LOCK	-	-	-	-	-	-	-	-	-	-	-	-	6	6	6	6	6	6
29	21500	REAR WHEEL LOCKNUT INSERT - ASSEMBLY	-	-	-	-	-	-	6	6	6	6	6	6	-	-	-	-	-	-
30	99015	SCREW PHILLIPS #10-32 X 2" HANDRIM MAG + BLUE THREADLOCKER	-	-	4	4	4	4	-	-	-	-	-	-	-	-	-	-	-	-
31	90746	SOCKET CAP SCREW M5X0.8 X 15mm LONG, FULLY THREADED + BLUE TREADLOCKER - BLACK ZINC	-	-	-	-	-	-	6	6	6	6	6	6	-	-	-	-	-	-
32	90744	SOCKET CAP SCREW M5X0.8 X 12mm LONG, FULLY THREADED + BLUE TREADLOCKER - BLACK ZINC	-	-	-	-	-	-	-	-	-	-	-	-	6	6	6	6	6	6

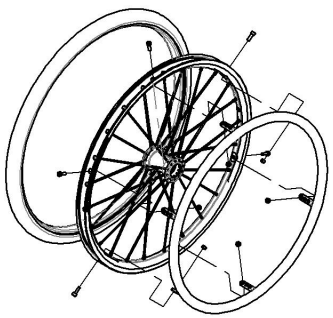

MAKE SURE TO HAVE YOUR SERIAL NUMBER NEARBY WHEN ORDERING PARTS FOR YOUR MOTION COMPOSITES WHEELCHAIR

Quick Order Catalogue
Wheel Lock Pair Assembly

ITEM NO.	PARTNO	DESCRIPTION	QTY.
1	9003022	Wheel Lock - Newton Spring Loaded Push to Lock (Pair)	1
2	9003023	Wheel Lock - Newton Spring Loaded Push to Lock, 6 in Removable Extension Handle (Pair)	1
3	9002269	Wheel Lock - Newton Grade Aid, Push to Lock (Pair)	1
4	9003024	Wheel Lock - Newton Grade Aid, Push to Lock, 6 in Removable Extension Handle (Pair)	1
5	9001577	Wheel Lock - Pull to Lock (Pair)	1
6	9001579	Wheel Lock - Pull to Lock, 6 in Removable Extension Handle (Pair)	1
7	9002268	Wheel Lock - Scissor (Pair)	1

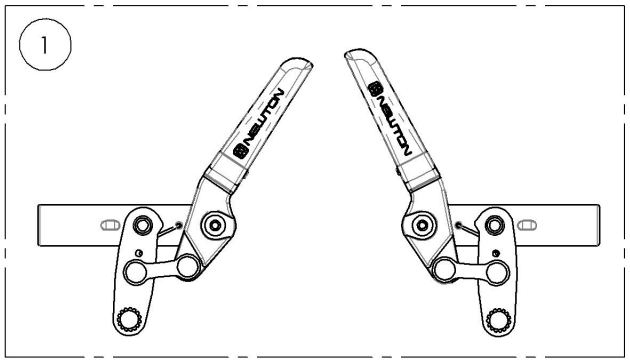

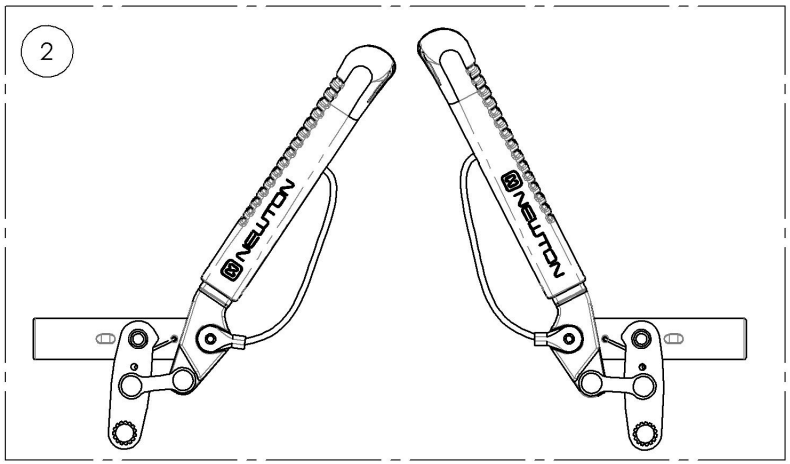

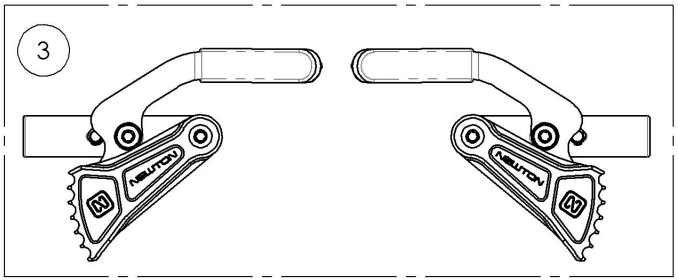

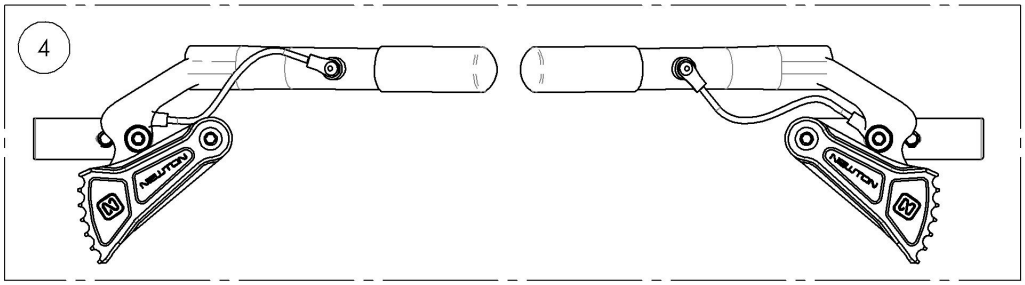

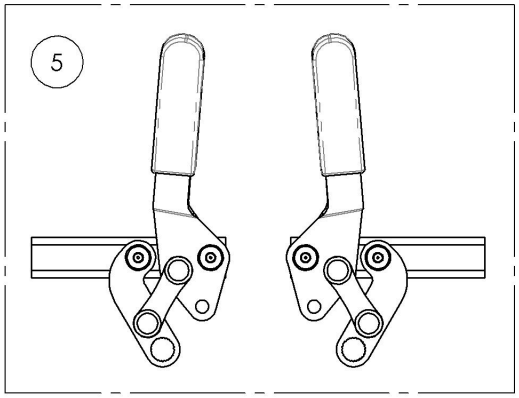

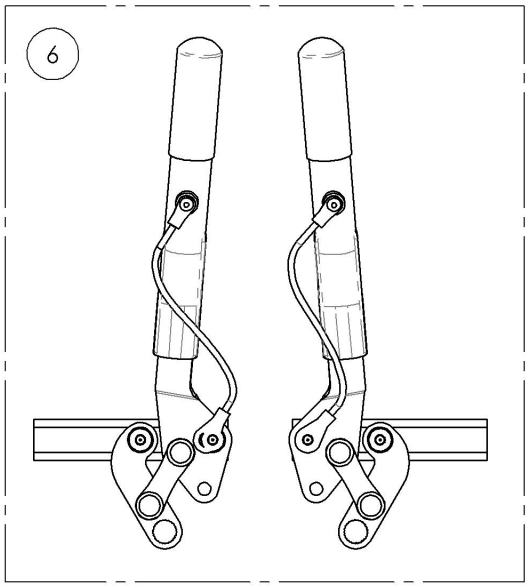

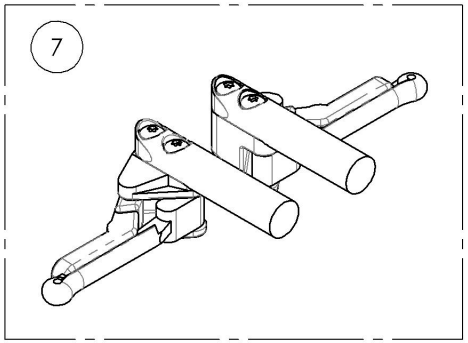

MAKE SURE TO HAVE YOUR SERIAL NUMBER NEARBY WHEN ORDERING PARTS FOR YOUR MOTION COMPOSITES WHEELCHAIR

9003022
Wheel Lock - Newton Spring Loaded Push to Lock (Pair)

ITEM NO.	PARTNO	DESCRIPTION	9003022 /QTY.
1	41056	NEWTON PUSH SPRING WHEEL LOCK, LEFT - ASSY	1
2	41057	NEWTON PUSH SPRING WHEEL LOCK, RIGHT - ASSY	1

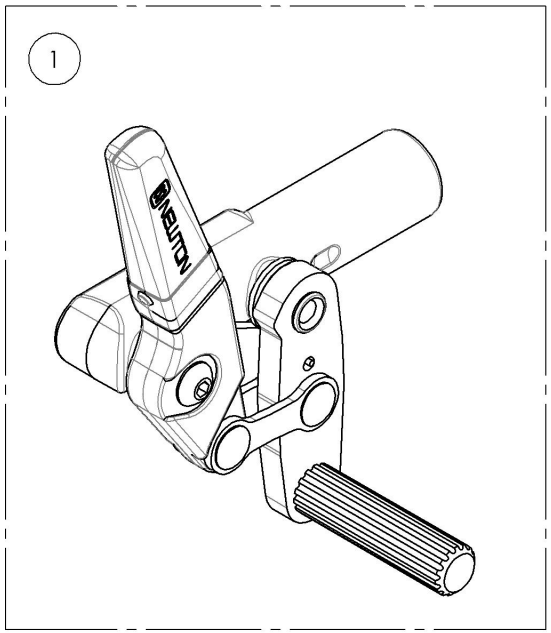

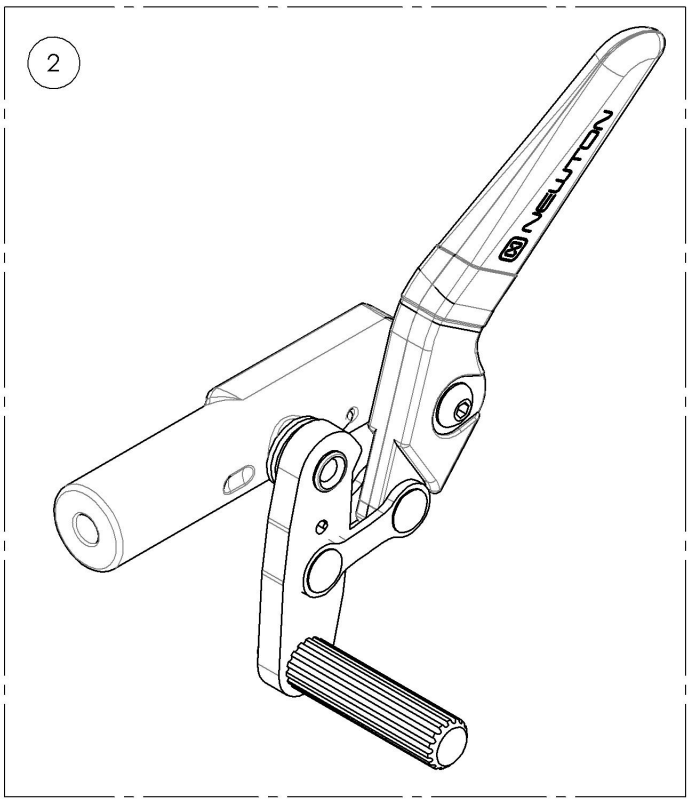

MAKE SURE TO HAVE YOUR SERIAL NUMBER NEARBY WHEN ORDERING PARTS FOR YOUR MOTION COMPOSITES WHEELCHAIR

9003023
Wheel Lock - Newton Spring Loaded Push to Lock, 6 in Removable Extension Handle (Pair)

ITEM NO.	PARTNO	DESCRIPTION	9003023 /QTY.	REPLACEMENT PARTS/QTY.
1	41051	NEWTON PUSH SPRING WHEEL LOCK + EXTENSION, LEFT - ASSY	1	-
2	41052	NEWTON PUSH SPRING WHEEL LOCK + EXTENSION, RIGHT - ASSY	1	-
3	41500	NEWTON REMOVABLE EXTENSION HANDLE - ASSEMBLY	-	1

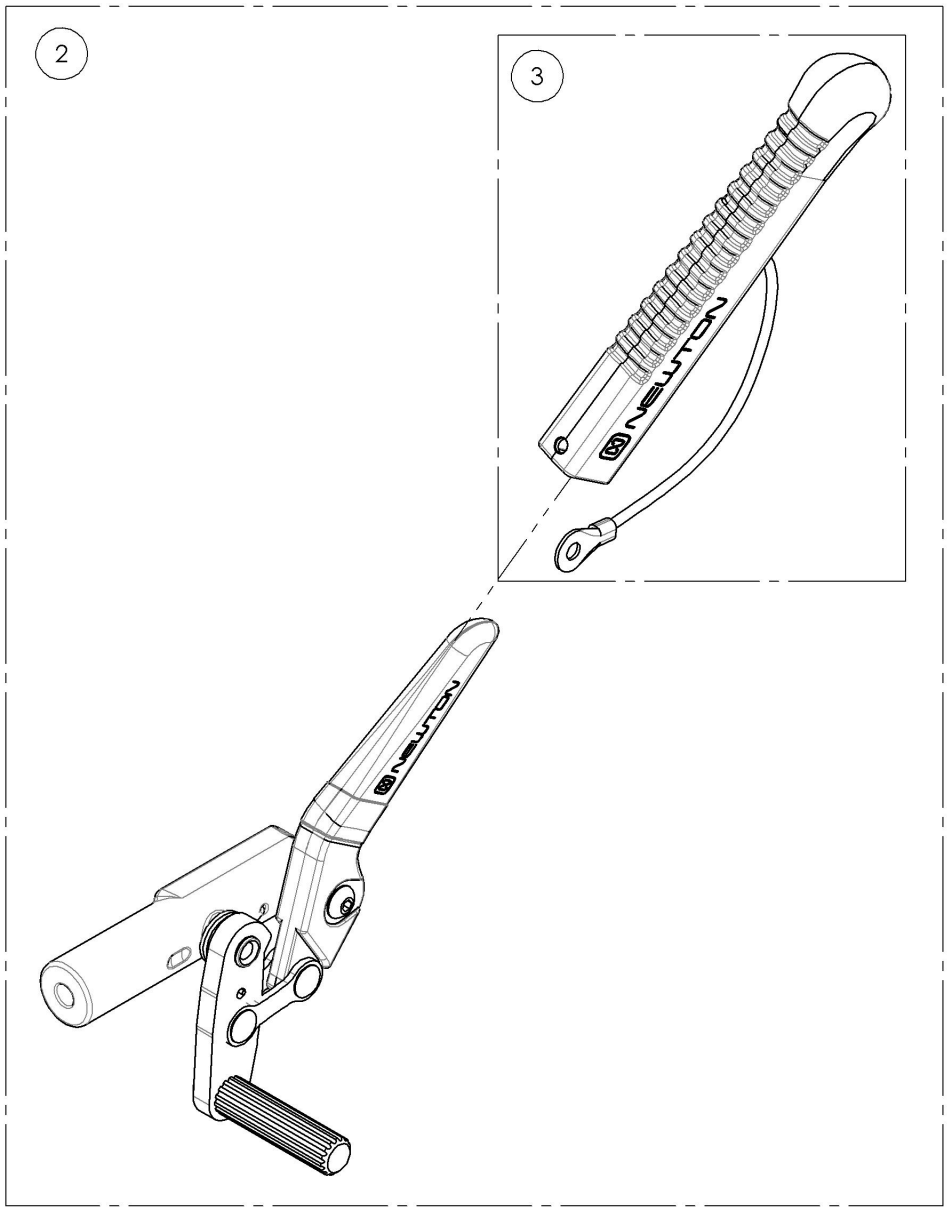

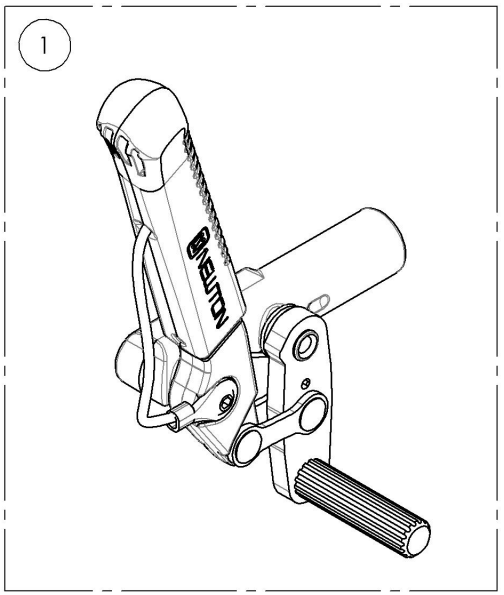

MAKE SURE TO HAVE YOUR SERIAL NUMBER NEARBY WHEN ORDERING PARTS FOR YOUR MOTION COMPOSITES WHEELCHAIR

9002269
Wheel Lock - Newton Grade Aid, Push to Lock (Pair)

ITEM NO.	PARTNO	DESCRIPTION	9002269 /QTY.
1	41035	GRADE AID WHEEL LOCK, RIGHT - ASSY	1
2	41036	GRADE AID WHEEL LOCK, LEFT - ASSY	1

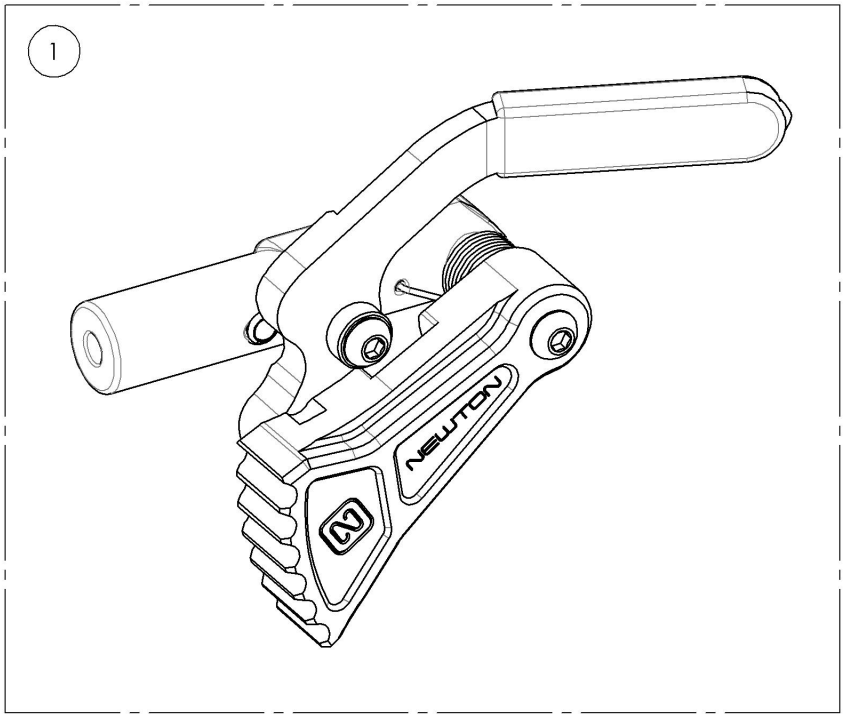

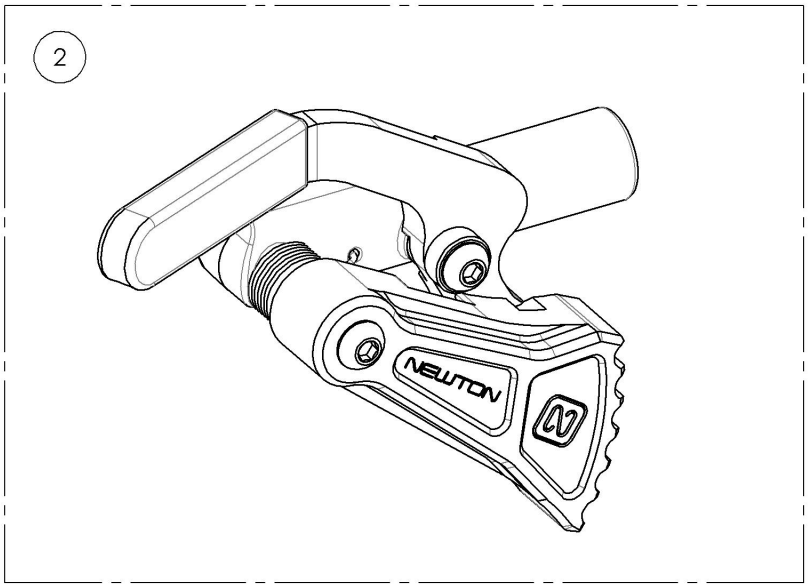

MAKE SURE TO HAVE YOUR SERIAL NUMBER NEARBY WHEN ORDERING PARTS FOR YOUR MOTION COMPOSITES WHEELCHAIR

9003024
Wheel Lock - Newton Grade Aid, Push to Lock, 6 in Removable Extension Handle (Pair)

ITEM NO.	PARTNO	DESCRIPTION	9003024 /QTY.
1	41035	GRADE AID WHEEL LOCK, RIGHT - ASSY	1
2	41036	GRADE AID WHEEL LOCK, LEFT - ASSY	1
3	41005	REMOVABLE EXTENSION HANDLE	2

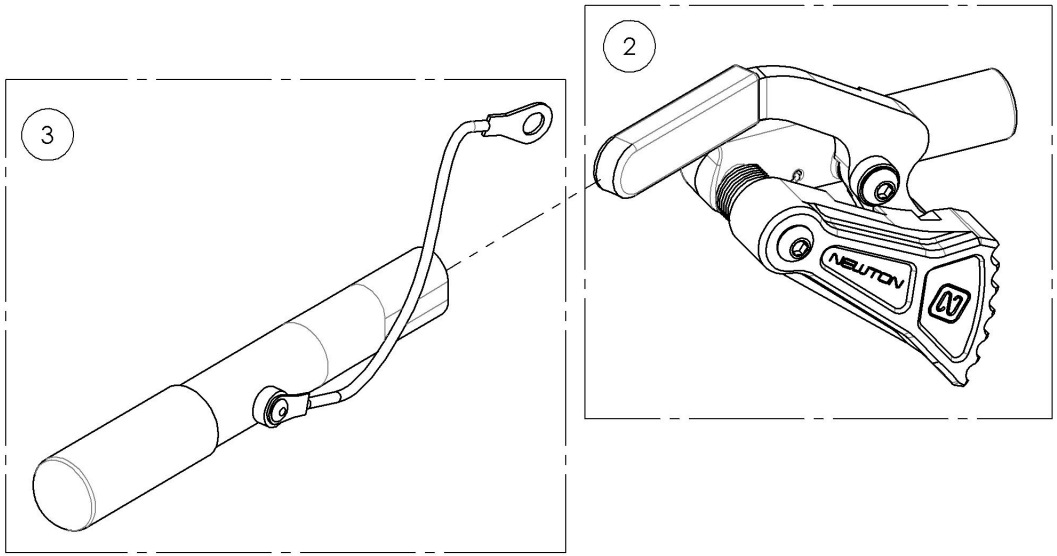

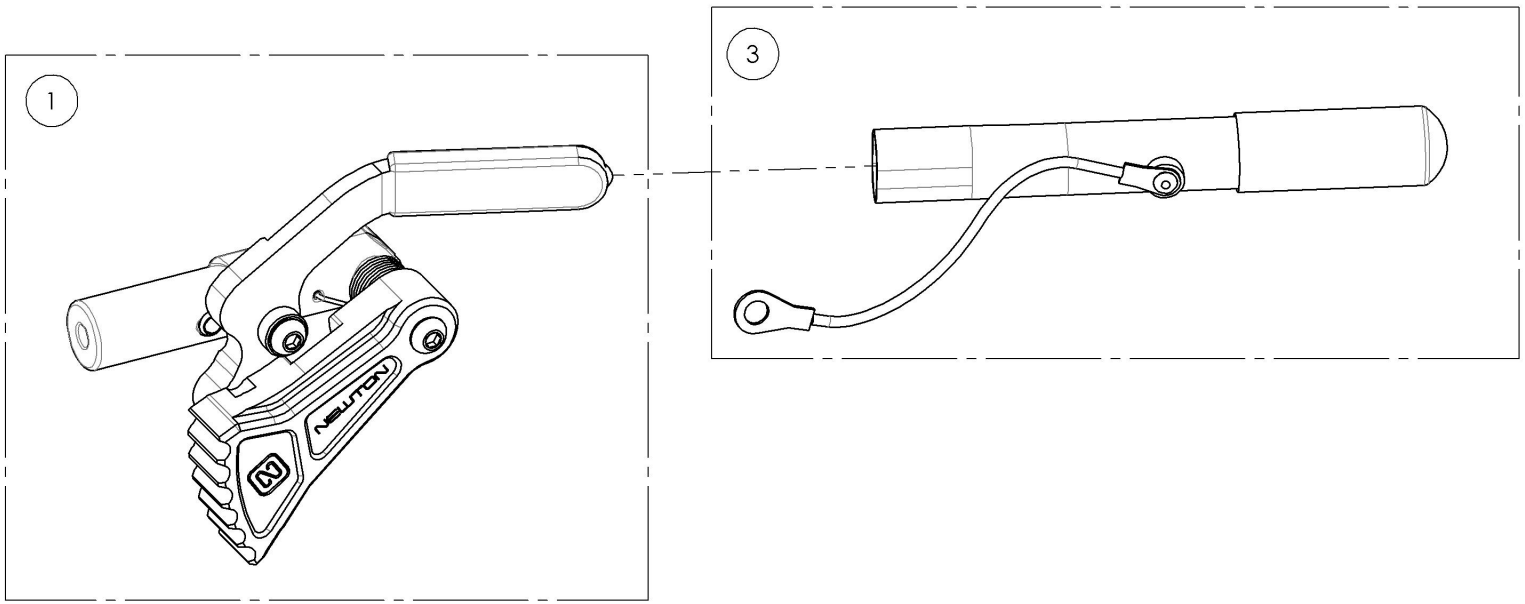

MAKE SURE TO HAVE YOUR SERIAL NUMBER NEARBY WHEN ORDERING PARTS FOR YOUR MOTION COMPOSITES WHEELCHAIR

9001577
Wheel Lock - Pull to Lock (Pair)

ITEM NO.	PARTNO	DESCRIPTION	9001577 /QTY.
1	41078	PULL TO LOCK WHEEL LOCK, RIGHT	1
2	41079	PULL TO LOCK WHEEL LOCK, LEFT	1

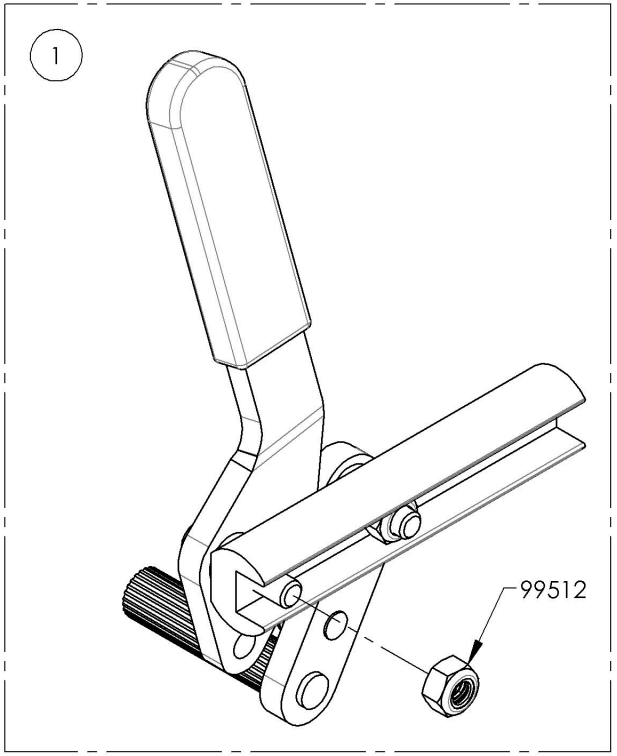

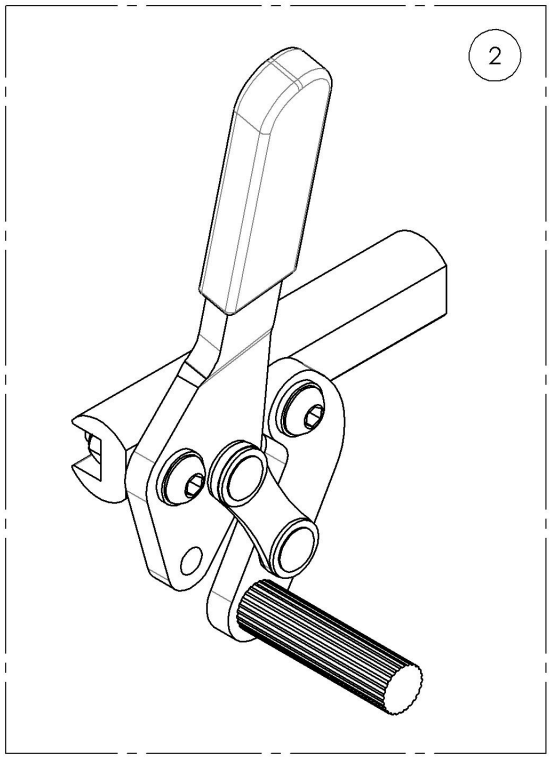

MAKE SURE TO HAVE YOUR SERIAL NUMBER NEARBY WHEN ORDERING PARTS FOR YOUR MOTION COMPOSITES WHEELCHAIR

9001579
Wheel Lock - Pull to Lock, 6 in Removable Extension Handle (Pair)

ITEM NO.	PARTNO	DESCRIPTION	9001579 /QTY.	REPLACEMENT PARTS/QTY.
1	41080	PULL TO LOCK WHEEL LOCK + HANDLE, RIGHT	1	-
2	41081	PULL TO LOCK WHEEL LOCK + HANDLE, LEFT	1	-
3	41005	REMOVABLE EXTENSION HANDLE	-	1

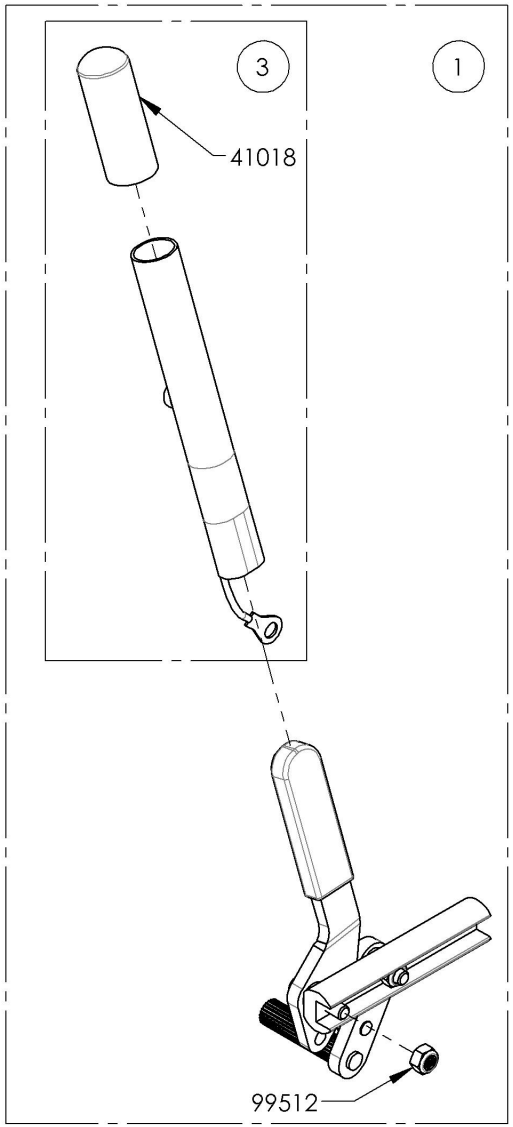

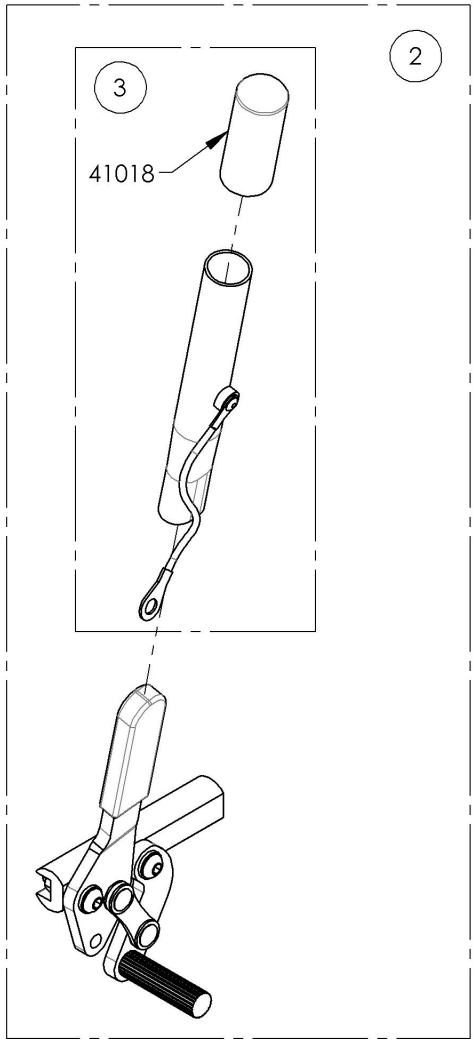

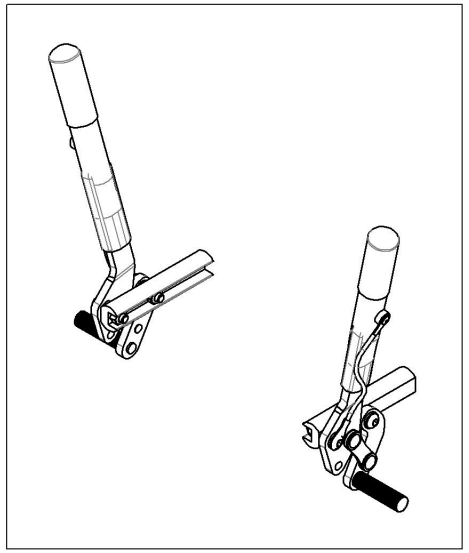

MAKE SURE TO HAVE YOUR SERIAL NUMBER NEARBY WHEN ORDERING PARTS FOR YOUR MOTION COMPOSITES WHEELCHAIR

9002268
Wheel Lock - Scissor (Pair)

ITEM NO.	PARTNO	DESCRIPTION	9002268 /QTY.
1	41038	OUT-FRONT SCISSOR WHEEL LOCK, LEFT	1
2	41039	OUT-FRONT SCISSOR WHEEL LOCK, RIGHT	1

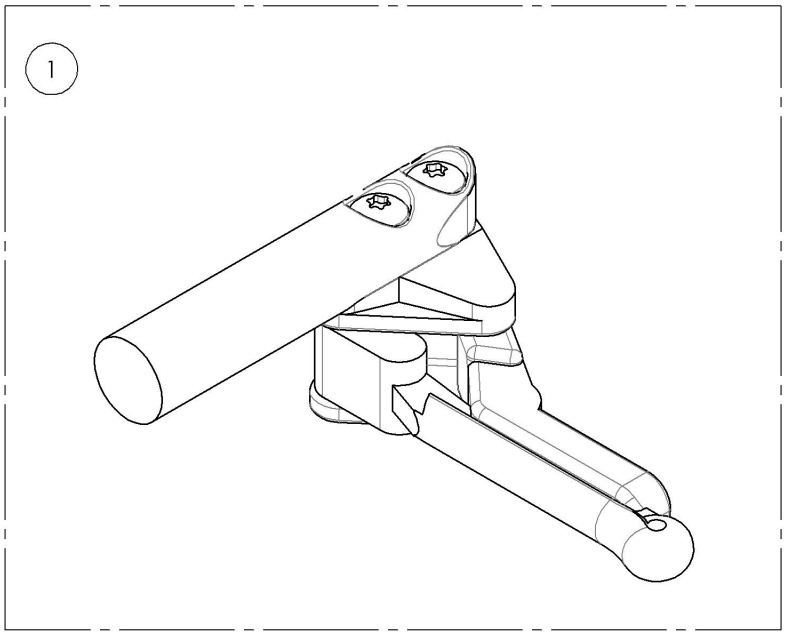

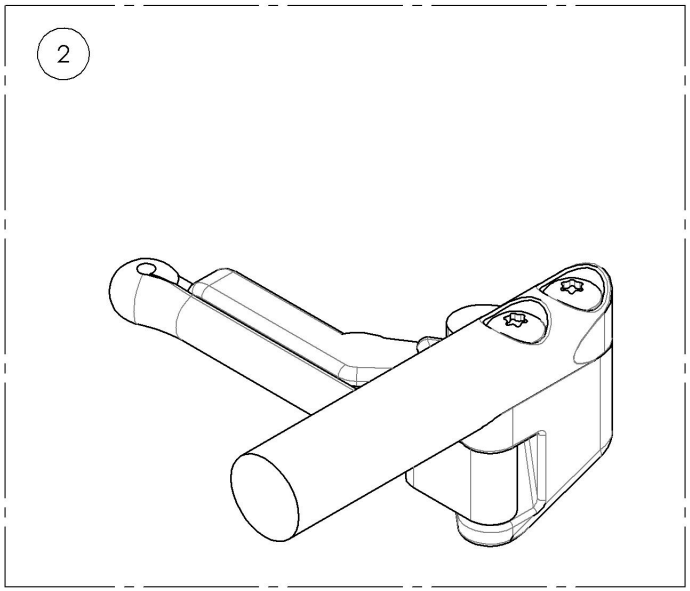

MAKE SURE TO HAVE YOUR SERIAL NUMBER NEARBY WHEN ORDERING PARTS FOR YOUR MOTION COMPOSITES WHEELCHAIR